Sketching in synchronous modeling

Publication Number
spse01510

Sketching in synchronous modeling

Publication Number
spse01510

Proprietary and restricted rights notice

This software and related documentation are proprietary to Siemens Product Lifecycle Management Software Inc.

© 2010 Siemens Product Lifecycle Management Software Inc. All Rights Reserved.

All trademarks belong to their respective holders.

SOLID EDGE
VELOCITY SERIES

...with Synchronous Technology

Contents

Introduction **1-1**

3D sketching overview **2-1**

Sketch workflow 2-2
Activity: Draw a simple sketch 2-2

Sketch plane locking **3-1**

Drawing synchronous sketches of parts **4-1**

Regions 4-11
Open sketches 4-13
Synchronous sketch behavior in the ordered environment 4-13

Drawing ordered sketches of parts **5-1**

Drawing commands **6-1**

Drawing 2D elements 6-1

Sketch geometric relationships **7-1**

Geometric Relationships 7-1
Drawing Tools 7-7
Distance and area measurement 7-19

Dimensioning sketches **8-1**

Locked dimensions 8-1
Dimension orientation 8-2
Dimension style 8-3

Sketches in PathFinder **9-1**

Sketches context menu in PathFinder 9-2
Used Sketches context menu in PathFinder 9-2

Sketch plane origin **10-1**

Reposition origin command 10-2
Zero Origin command 10-2
Reposition origin workflow 10-3
Sketch view 10-4

Sketch consumption and dimension migration **11-1**

Working with combinable sketches 11-3

Moving sketches **12-1**

Manipulating sketch elements in 2D 12-1
Moving and copying sketch elements in 3D 12-2
Copy, cut, and paste sketch elements 12-4

Projecting elements onto a sketch plane **13-1**

Project to sketch command 13-1

Sketching instructional activities **14-1**

Part1 14-1
Part 2 14-1
Part 3 14-1

Sketch projects **15-1**

Activity: Draw a simple sketch **A-1**

Choose a sketch command A-1
Draw the sketch shape with line segments A-2
Add a circle to the sketch A-3
Place sketch geometry relationships A-4
Place sketch dimensions A-4
Sketch complete A-6
Summary A-6
Practice A-6

Activity: Create regions **B-1**

Open a part file B-1
Draw a rectangle B-1
Select the region B-2
Create nested regions B-3
Select multiple regions B-4
Summary B-5
Practice B-5

Activity: Sketching (Part 1) **C-1**

Start the sketching process C-1
Draw sketch geometry C-2
Regions formed C-4
Place geometric relationships C-5
Add dimensions C-6
Turn off sketch C-6
Summary C-7

Activity: Sketching (Part 2) **D-1**

Create a sketch plane D-1
Start the sketching process D-3
Observe sketch associativity D-4
Draw sketch geometry D-5
Edit display D-7
Summary D-7

Activity: Sketching (Part 3) E-1

Draw a sketch on a face E-2
Copy the sketch E-2
Paste the sketch E-3
Rotate the copied sketch E-4
Move the copied sketch E-6
Summary E-9

Drawing A F-1

Drawing B G-1

Drawing C H-1

Drawing D I-1

Drawing E J-1

Lesson

1 *Introduction*

Welcome to self paced training for Solid Edge. This course is designed to educate you in the use of Solid Edge. The course is self-paced and contains instruction followed by activities.

Solid Edge self-paced courses

- **spse01510**—Sketching
- **spse01515**—Constructing base features
- **spse01520**—Moving and rotating faces
- **spse01525**—Working with face relationships
- **spse01530**—Constructing treatment features
- **spse01535**—Constructing procedural features
- **spse01536**—Modeling synchronous and ordered features
- **spse01540**—Modeling assemblies
- **spse01541**—Explode-Render-Animate
- **spse01545**—Creating detailed drawings
- **spse01546**—Sheet metal design
- **spse01550**—Practicing your skills with projects
- **spse01560**—Modeling a Part Using Surfaces
- **spse01610**—Solid Edge frame design
- **spse01640**—Assembly patterning
- **spse01645**—Assembly systems libraries
- **spse01650**—Working with large assemblies
- **spse01655**—Revising assemblies
- **spse01660**—Assembly reports
- **spse01665**—Replacing parts in an assembly

- **spse01670**—Designing in the context of an assembly
- **spse01675**—Assembly features
- **spse01680**—Inspecting assemblies
- **spse01685**—Alternate assemblies
- **spse01690**—Virtual components in assemblies
- **spse01695**—XpresRoute (tubing)
- **spse01696**—Creating a Wire Harness with Harness Design
- **spse01424**—Working with Solid Edge Embedded Client

Start with the tutorials

Self-paced training begins where tutorials end. Tutorials are the quickest way for you to become familiar with the basics of using Solid Edge. If you do not have any experience with Solid Edge, please start by working through the tutorials for basic part modeling and editing before starting this self-paced training.

Lesson

2 3D sketching overview

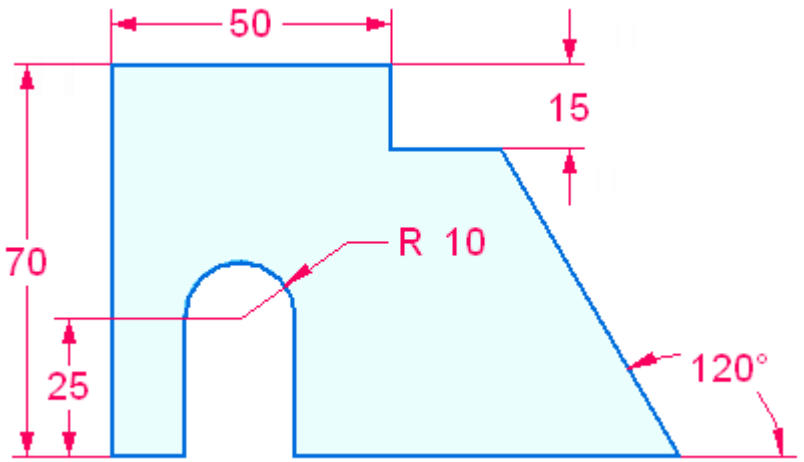

2D sketch geometry defines the cross-sectional shape used to create a base solid body or the shape used to create a feature on an existing solid body. Sketches are drawn in 3D on either a planar face or a reference plane. You lock onto a planar face or reference plane to draw sketch geometry.

Both open and closed sketches can be used to create a model feature. A sketch that forms a closed area (from sketch elements or a combination of sketch elements and model edges on the sketch plane) produces a selectable **region**. When a region is selected, the protrusion feature command is started. To use an open sketch, choose a protrusion command (Extrude or Revolve) in the Solids group which requires a step to define the material side of the open sketch.

Sketches do not drive features. Geometric relationships applied to the sketch geometry do not migrate to the feature created. The system can detect, on the resulting feature, tangent, parallel, coplanar and concentric faces. Dimensional relationships do migrate from the sketch geometry to the edges of the body as a feature is created.

Sketch geometry used in creating a feature is consumed and placed in a **Used Sketches** collector in PathFinder. Any remaining sketch geometry not consumed remains in the **Sketches** collector.

By default, all sketch geometry placed on a sketch plane merge into a single sketch. This is controlled by the sketch option **Merge with Coplanar Sketches**. If separate sketches are required on a sketch plane, the **Merge with Coplanar Sketches** option can be turned off. This sketch option is primarily used in an Assembly Layout design workflow.

Sketch workflow

1. Choose the Sketching tab, in the Draw group, select a sketching command.

2. Start drawing or lock to a sketch plane (reference plane or planar face) to draw sketch geometry on.

3. (Optional) Draw a sketch in the active view orientation or rotate the view normal to the sketch plane by using the Sketch View command.

4. Draw sketch geometry or perform any sketch related operation (for example: placing relationships, dimensions).

5. Finish or draw another sketch. If the sketch plane is locked and you need another sketch plane, unlock the plane. Repeat steps 2–4.

   If the new sketch area is on the same plane, continue sketching geometry.

   Note

   You can only have one sketch on a plane, but the sketch may contain as many regions and separate elements as you need. If separate sketches are required on a sketch plane, turn off the **Merge with Coplanar Sketches** option.

Activity: Draw a simple sketch

This activity guides you through the process of drawing a simple a sketch. You will add relationships and dimensions.

Turn to **Appendix A** for the activity.

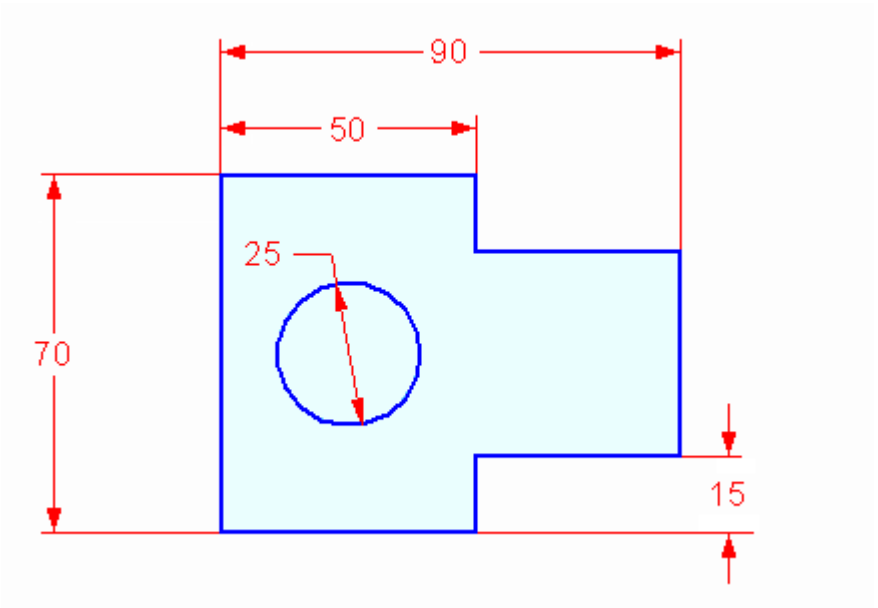

Lesson

3 Sketch plane locking

Many commands in Solid Edge use a 2D plane for placement of geometry in 3D model space. For example, when drawing 2D sketch elements, such as lines, arcs, and circles, the 2D elements reside on a coordinate system plane, reference plane, or planar face on the model. This 2D plane is called the sketch plane. Only one sketch plane is available at a time.

There are two methods for locking input to the sketch plane:

- Automatic locking, where the active command locks the sketch plane for you, and unlocks the sketch plane when you restart the command, or you start another command.
- Manual locking, where you lock the sketch plane, and unlock it later yourself.

Sketch plane locking makes it easy to draw on several reference planes or planar faces quickly.

Automatic sketch plane locking

When you start a command that uses a sketch plane, and then position the cursor over a reference plane or planar face, the plane or face highlights (1), and an edge on the plane (2) is highlighted to indicate x-axis of the current sketch plane. The alignment lines, which extend outward from the cursor, also align themselves to the plane under the cursor. A lock symbol (3) is also displayed if you want to manually lock the sketch plane, which is discussed later.

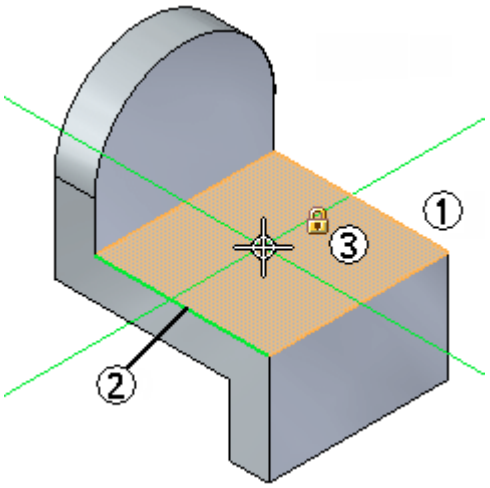

When you click to position the starting point for the sketch element, the sketch plane is automatically locked to the highlighted plane or face. The alignment lines (1) (2) remain displayed as you draw to indicate the current sketch plane's X- and Y-axes.

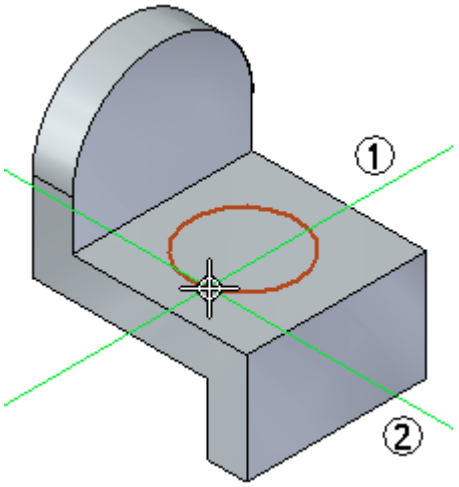

The sketch plane remains locked until you right-click to restart the current command, or start another command. This ensures all sketch input lies on the current sketch plane.

Sketch plane locking makes it easy to draw on several faces of the model quickly. For example, after drawing the first circle, you can right-click to restart the command, then draw a circle on a second face, right click again, and draw a circle on a third face.

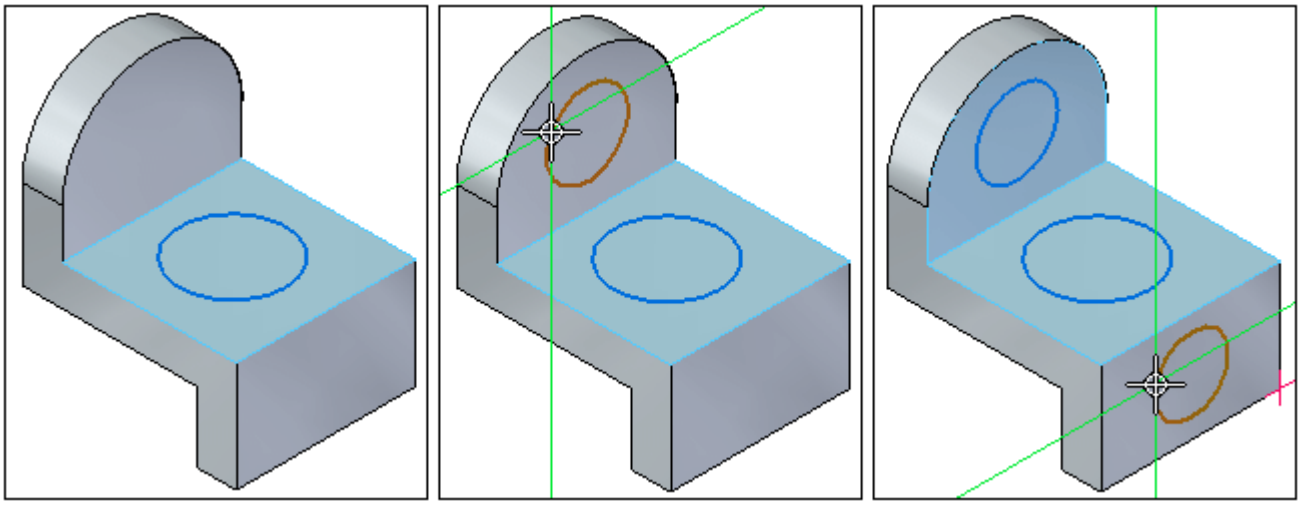

Manual sketch plane locking

You can also manually lock the sketch plane. This is useful when the sketch geometry is complex or will extend beyond the outer edges of the planar face or reference plane on which you want to draw.

When you are in a command that supports manual sketch plane locking, a lock symbol is displayed near the cursor (1) when you are over a planar face or reference plane. You can click this symbol to manually lock the plane.

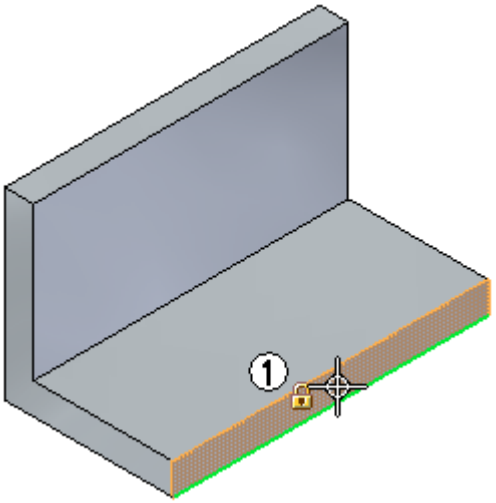

Tip

You can also lock and unlock the sketch plane by pressing the **F3** key when you are in any command that supports sketch plane locking.

The sketch plane remains locked regardless of the cursor position until you manually unlock the plane. This makes it easy to draw beyond the outer edges of the planar face.

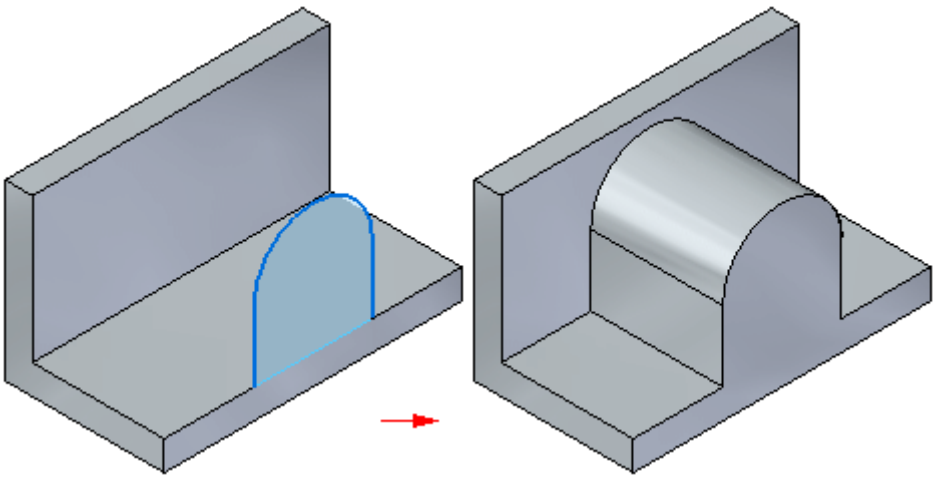

When the sketch plane has been locked manually, a locked plane indicator symbol (1) is displayed in the top-right corner of the graphics window.

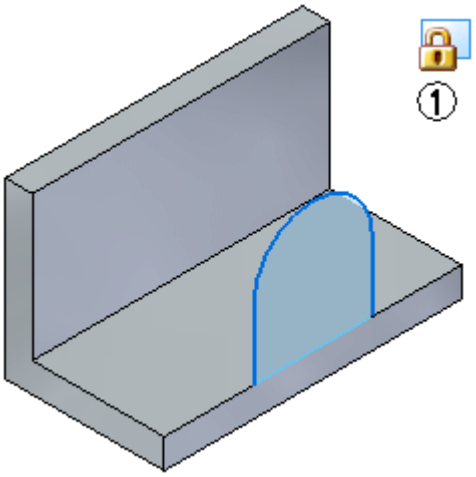

When you want to unlock the sketch plane, you can click the locked plane indicator symbol in the graphics window to unlock the plane, or you can press the **F3** key.

Plane locking and PathFinder

Whether you lock the sketch plane automatically or manually, a locked plane indicator (1) appears in PathFinder adjacent to the sketch which is locked.

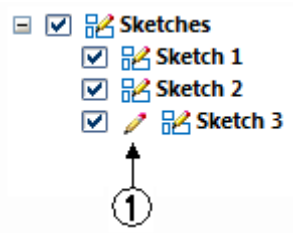

If there are existing sketches in the model, you can lock and unlock the sketch plane using the Lock Sketch Plane command on the PathFinder shortcut menu when your cursor is over a sketch entry.

Lesson

4 Drawing synchronous sketches of parts

You draw synchronous sketches to establish the basic shape requirements of a part before you construct any features. You can draw a synchronous sketch on a principal plane of the base coordinate system, a planar face on the model, or a reference plane. You can then use these sketches to create sketch-based features, such as extruded features which add or remove material.

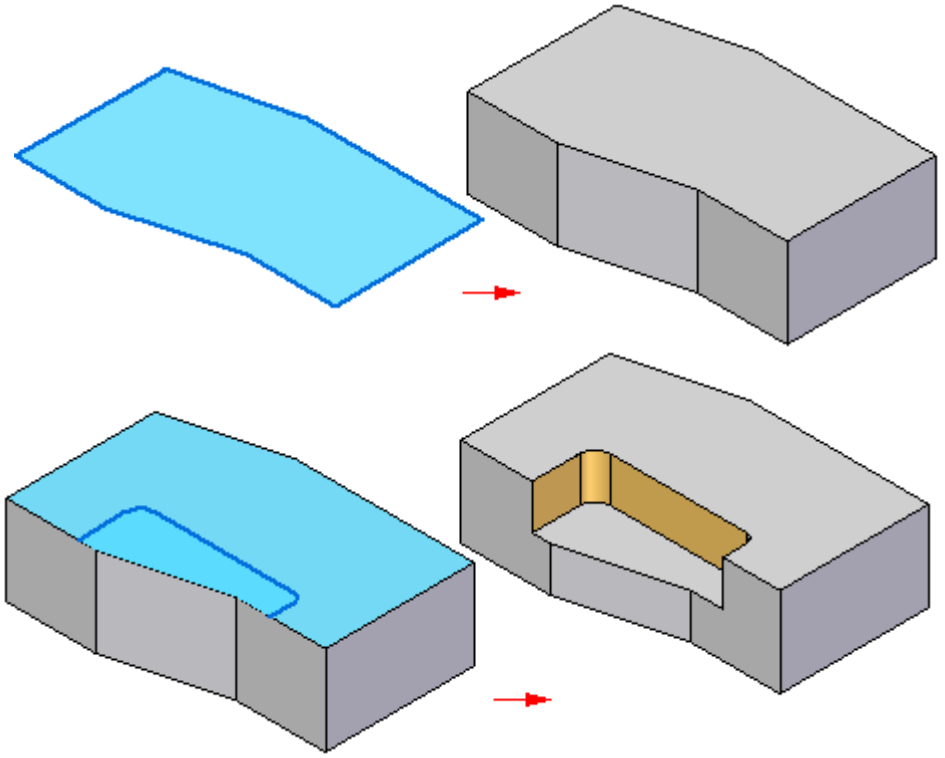

Visual sketching aids

There are a variety of visual sketching aids available to you. The triad in the center of the graphics window is the base coordinate system.

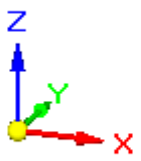

The principal planes on the base coordinate system are typically used to draw the first sketch for the base feature on a new part.

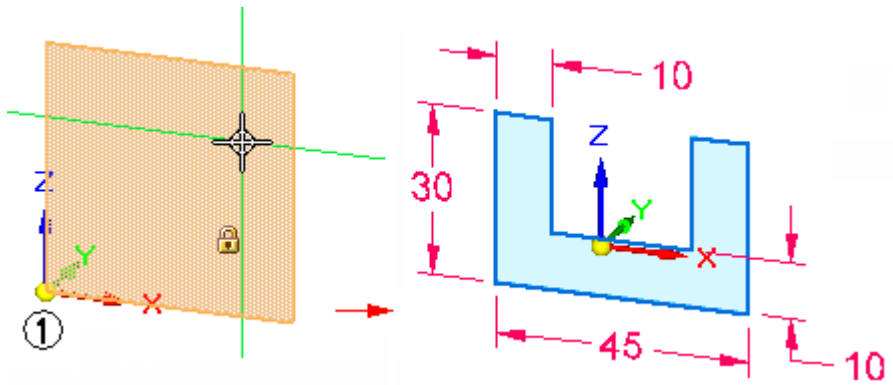

You can also independently display the sketching grid, alignment lines, and coordinate readouts using the Grid Options command.

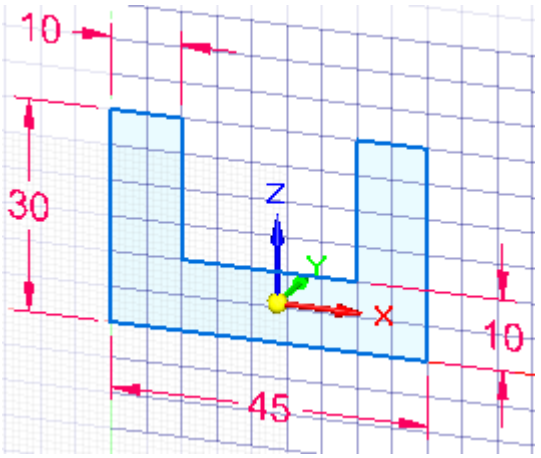

Getting started with sketching

Getting started with sketching is easy. When you sketch elements, they will go on the coordinate system plane, planar face, or reference plane that is directly under your cursor when you start placing the element.

When starting a new part, you would typically draw a sketch on one of the three principal planes of the base coordinate system. For example, you can draw the first sketch for a new part on the XZ principal plane of the base coordinate system (1).

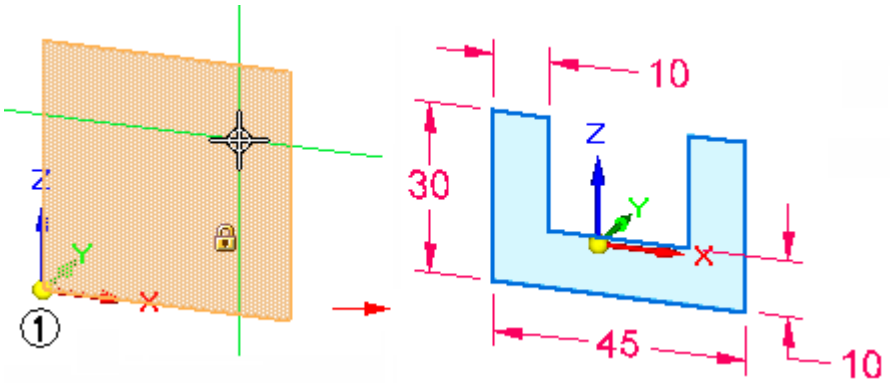

You can see which plane of the coordinate system you will draw on because the plane under the cursor highlights, and the alignment lines, which extend out from the cursor, adjust dynamically depending on what plane your cursor is over.

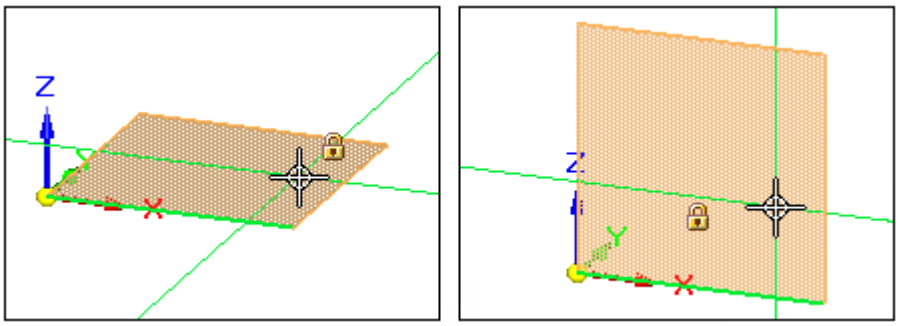

When you click to define the first endpoint of an element, such as a line, sketch input is locked to the current plane.

Note

- If there is not a coordinate system plane, model face, or reference plane under your cursor, the element will fall on one of the three principal planes of the document. The system will automatically choose the one that is flattest to the view.

Sketch plane locking

Many of the sketching commands require a locked sketch plane for placement of 2D geometry in 3D model space.

There are two methods for locking the sketch plane:

- Automatic locking, where the active command locks the sketch plane for you, and unlocks the sketch plane when you start another command. This makes it easy to get started.

- Manual locking, where you lock the sketch plane, and unlock it later yourself. This is useful for complex sketches or for sketches where the sketch geometry extends beyond the boundary of the sketch plane.

Synchronous sketches locked to faces

A synchronous sketch drawn on a model face is automatically locked to the face. As the face moves, the sketch moves with the face. By default, the Live Rules option *Maintain Sketch Planes* is on.

To unlock the sketch from the model face, turn off the *Maintain Sketch Planes* option in Live Rules.

If a sketch is drawn on a model face that is coplanar to a base reference plane, the sketch is not locked to the model face.

Sketch plane X-axis orientation

When you highlight a coordinate system plane, planar face, or reference plane on which you want to draw a sketch, a default X-axis orientation is displayed automatically (1).

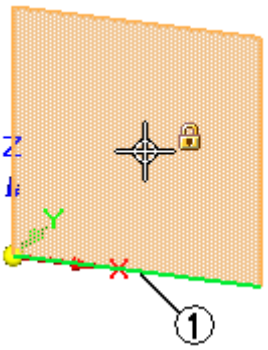

While you are defining the sketch plane and the default X-axis is highlighted (1), you can use the shortcut keys to change the X-axis orientation. For example, you can press the **N** key to select the next linear edge (2), or the **B** key to select the previous linear edge (3).

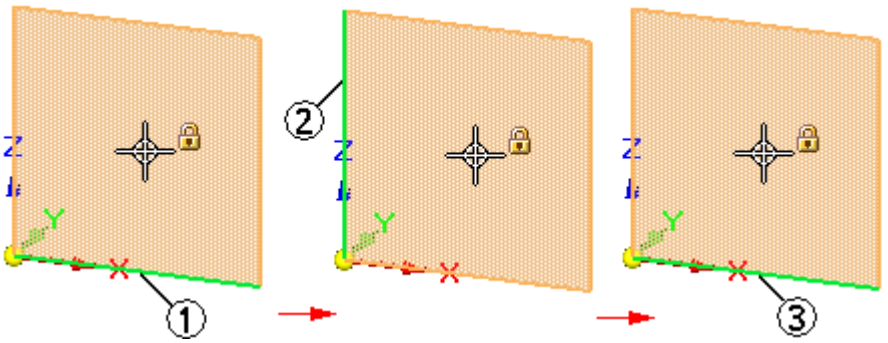

The valid shortcut keys for defining the X-axis orientation of a sketch plane are displayed in PromptBar when you are defining the sketch plane.

The X-axis orientation (1) (2) of a sketch controls the dimension text alignment for dimensions, and determines the horizontal and vertical axes for horizontal and vertical relationships.

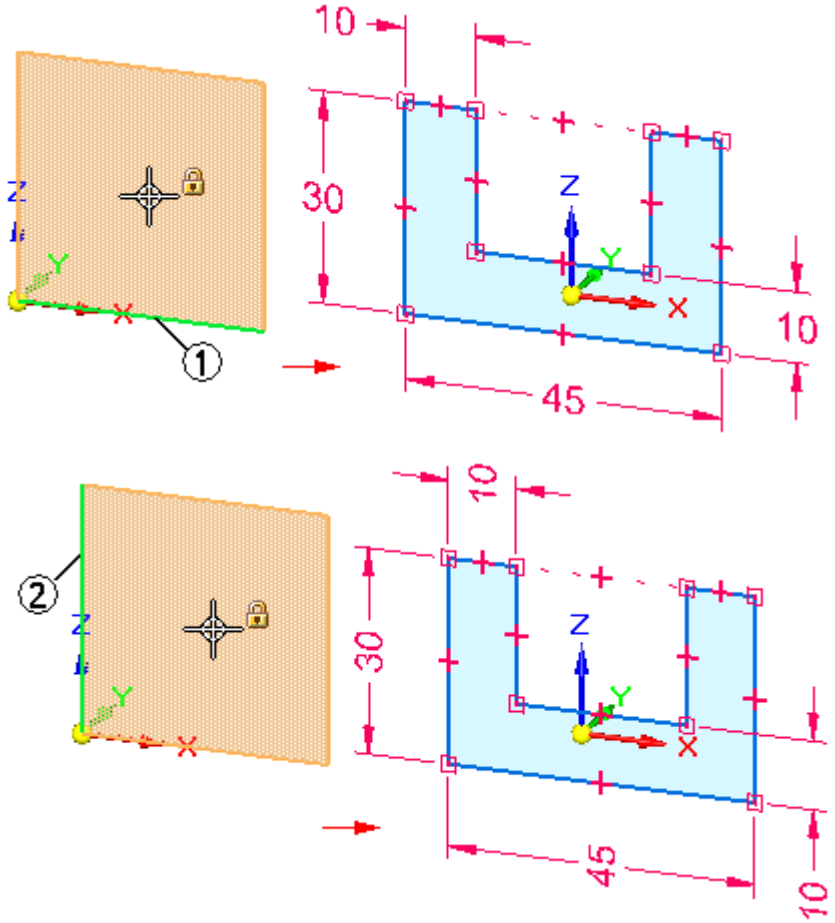

Sketch regions

In a part or sheet metal document, when you draw 2D sketch elements that form a closed area, the closed area is automatically displayed as a sketch region (1). When working in a shaded view, the closed region also displays as shaded.

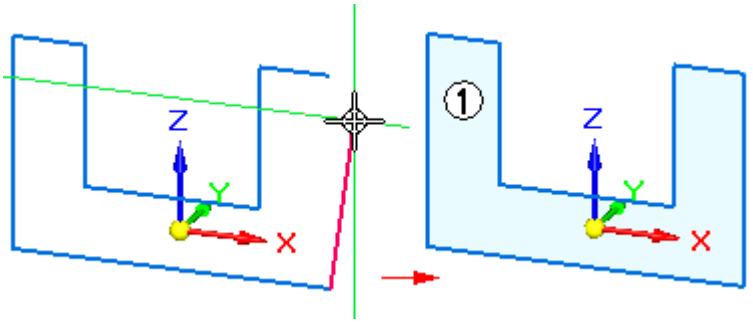

In a part or sheet metal document, you can use sketch regions to construct features using the Select tool. Sketch regions are formed automatically when a series of sketch elements close on themselves (1) , or when sketch elements and one or more model edges form a closed area (2).

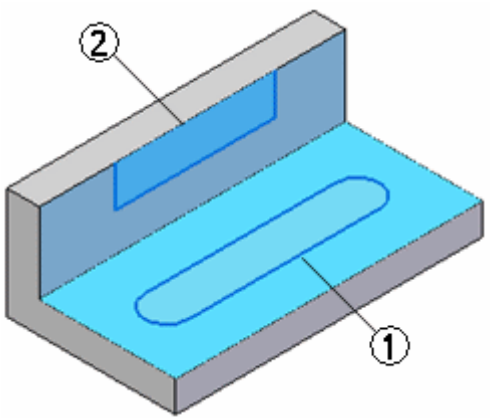

As you draw, you may want to disable sketch regions. You can do this by clearing the Enable Regions command, which is located on the shortcut menu when you select a sketch in PathFinder.

You can use the Enable Regions command to turn region selection on again.

The Enable Regions command is not available in an assembly document.

Adding dimensions and geometric relationships

You can add dimensions and geometric relationships to control the size, shape, and position of the sketch elements. You can also place dimensions and geometric relationships relative to the primary axes of the coordinate system. This can be especially useful for symmetric parts during later design modifications. For example, the 10 mm and 22.5 mm dimensions were placed relative to the X and Z axes of the base coordinate system.

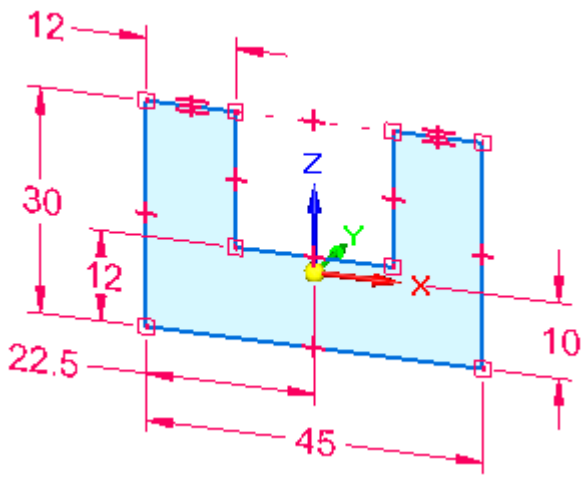

Note

You can display and hide geometric relationships using the Relationship Handles command.

You can also define functional relationships using the Variables command.

Keeping dimensions horizontal and vertical to the sketch geometry

To keep dimensions horizontal and vertical to the sketch geometry, you can move the sketch plane origin and reorient the sketch plane X-axis using the Reposition Origin command on the Sketching tab. This makes it possible to draw and dimension on different coplanar faces in the same sketch, yet keep dimension text and relationships oriented to an edge on the face, as shown.

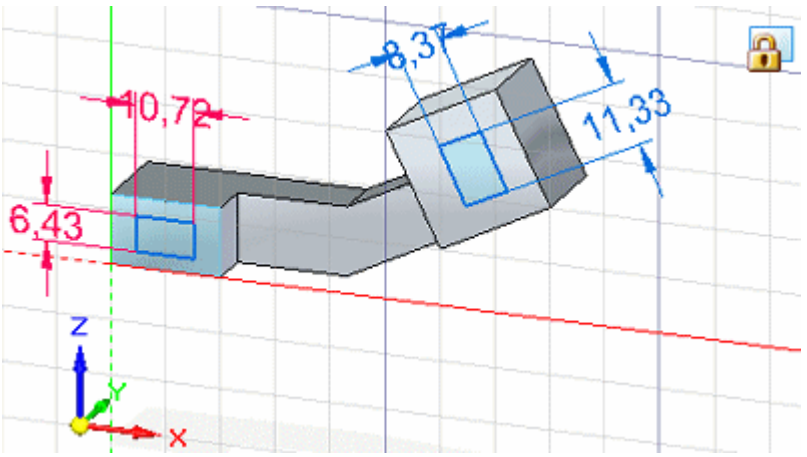

Using sketches to construct features

When you use a sketch to construct a feature in a part or sheet metal document, by default, the sketch elements are automatically consumed and transferred to the Used Sketches collection in PathFinder and the dimensions on the sketch are automatically migrated to the appropriate model edges when possible.

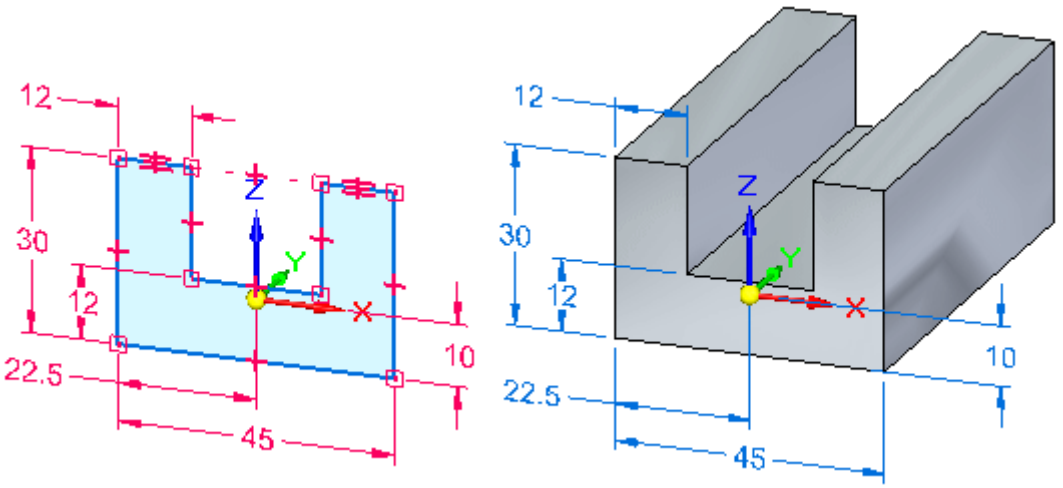

Note

After you construct a feature in a synchronous model, the original sketch geometry does not drive the feature.

You can use the Migrate Geometry and Dimensions command on the shortcut menu when a sketch is selected in PathFinder to control whether sketch elements are consumed and dimensions are migrated when you construct features using the sketch.

Editing sketches

You can move and resize sketch elements using the Select tool. You also can edit sketch elements using commands such as Extend To Next, Trim, Mirror, Scale, Rotate, Stretch, and so forth. With these commands, you select the command first, then follow the prompts to edit the sketch elements you want.

Sketching and PathFinder

The sketches you draw are listed in PathFinder. PathFinder also lists the base coordinate system, PMI dimensions, the base reference planes, features you construct, used sketches, and so forth.

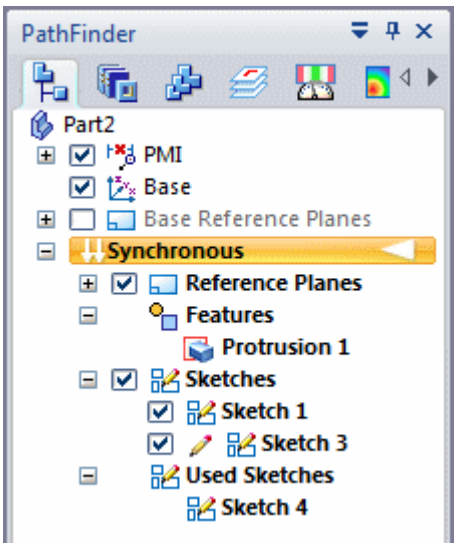

You can display or hide individual sketches or all the sketches in the document using the check box options in PathFinder and commands on the PathFinder shortcut menu.

When a sketch name is selected in PathFinder, you can use shortcut commands to:

- Delete a sketch.
- Cut, copy, and paste a sketches.
- Rename a sketch.

Moving sketches

Sometimes you may want to move or rotate an entire sketch to a new position in space. By default, when you use the Select tool to select sketch elements in the graphics window, only a sketch region or the selected sketch element is selectable.

To select an entire sketch, you can select the sketch entry in PathFinder, or you can use QuickPick to select the sketch in the graphics window.

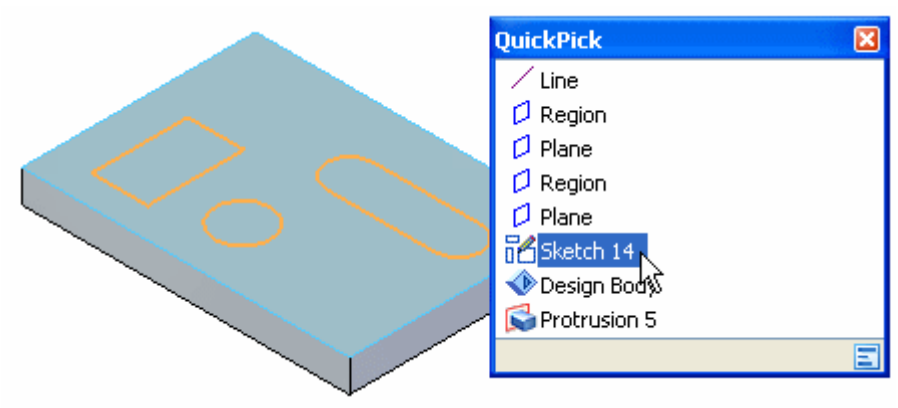

You can then use the steering wheel to move or rotate the sketch to a new position in space.

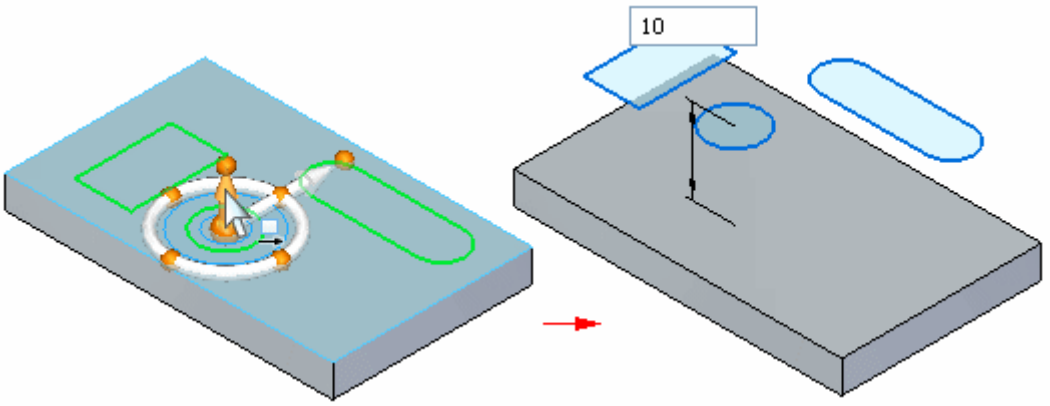

If the sketch in moved such that it becomes coplanar to another sketch, the two sketches are combined into one sketch, unless the Merge Coplanar sketches option has been cleared for one of the sketches.

Sketches and associativity

Sketch geometry is not directly associative to the plane or face on which it is drawn. If you move the plane or face on which the sketch is drawn, the sketch geometry does not move unless it is also in the select set. This does not apply to sketches drawn on the principal planes of the base coordinate system or the base reference planes, as these planes are fixed in space.

You can apply 2D geometric relationships between sketch elements and model edges. If the model edges move, the sketch elements and geometric relationships update.

Restoring sketches

To restore a sketch to its original location on the model, use the Restore command on the shortcut menu when a used sketch is selected. This can be useful if you want to use the sketch to construct another feature elsewhere on the model or if you deleted the feature that the used sketch described.

Projecting elements onto a sketch

You can use the Project to Sketch command on the Sketching page to project model edges or sketch elements onto the current sketch plane. The sketch elements you project are associative to the parent element. If the parent element is modified, the projected element updates.

Note

The associative link between the parent element and the projected element is discarded when you construct a feature using the projected elements.

Regions

Definition

A helper object used to create a solid feature consisting of planar and non-planar faces. A region is a closed area formed by sketch elements or a combination of sketch elements and part edges.

Regions are formed by the placement of 2D sketch geometry on sketch planes or part faces. Regions are created when a series of sketch elements or model edges form a closed area. Regions are a by-product of a closed sketch. Unselected regions appear with a shaded light blue color.

Region examples

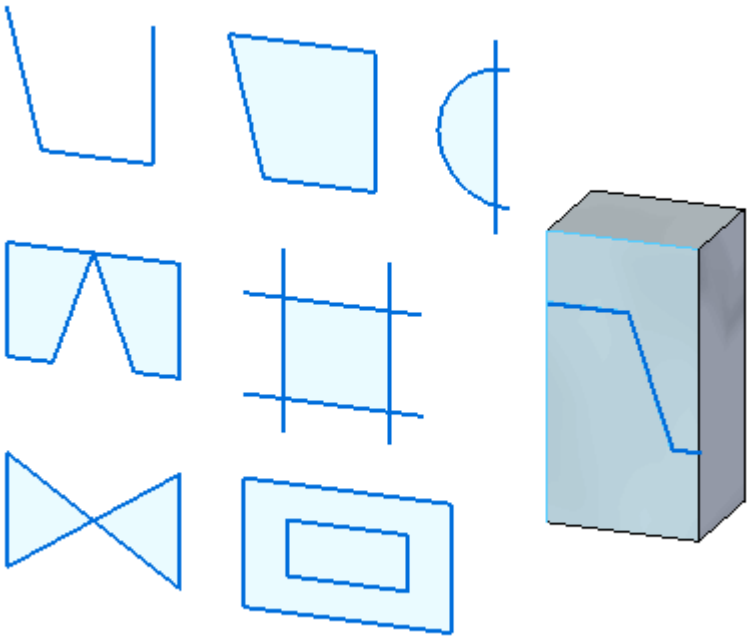

Selecting a region

As the cursor moves over a region, the region appears with a shaded tan color.

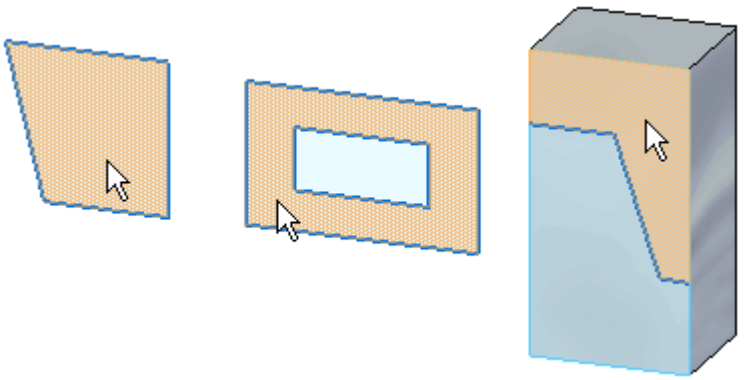

When the region is selected, the region appears with a shaded green color.

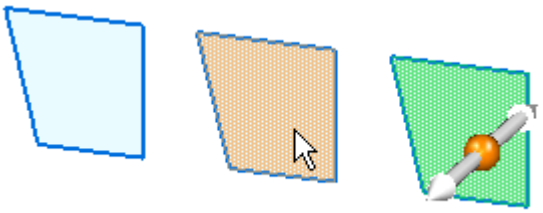

Regions can be selected in both object-action and action-object workflows.

Activity: Create regions

Draw a sketch and observe when regions are formed and how to select them.

Turn to **Appendix B** for the activity.

Open sketches

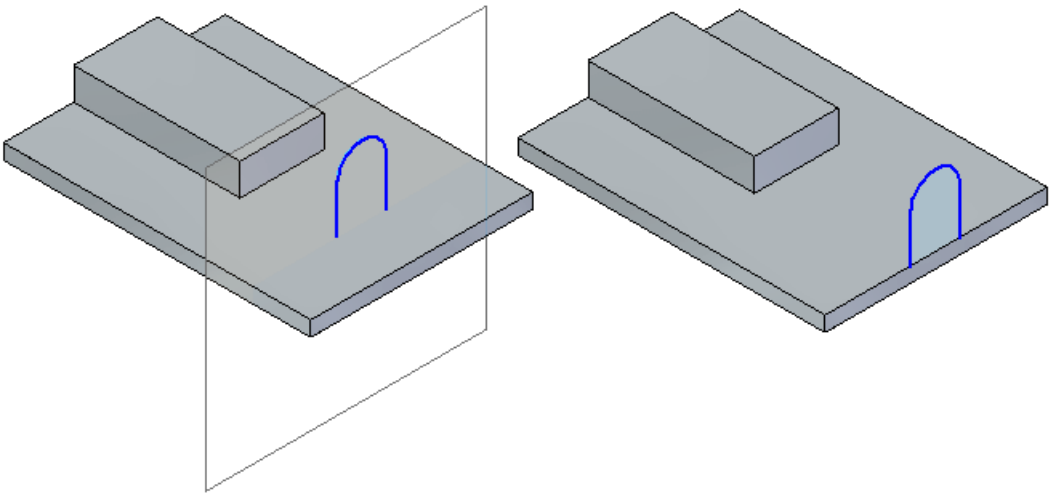

An open sketch that is not coplanar with a body face or is coplanar with a body face but does not touch or cross a face edge does not create a region. A region is created if an open sketch is connected to or crosses a coplanar face edge.

Note

Open sketches use the extrude command to create a body feature. Define the side of the open sketch to add material to and the sketch automatically extends to next face to create a body feature.

Synchronous sketch behavior in the ordered environment

Synchronous sketches are used to create both synchronous and ordered features. Ordered sketches cannot be used to create a synchronous feature because while in the synchronous environment, ordered elements are not available for selection.

Synchronous sketches can only be selected when creating an ordered feature by using the *Select from Sketch* option in the Profile step.

Editing an ordered feature created with a synchronous sketch

Ordered features are driven by sketches. To edit the cross section definition of an ordered feature, edit the driving sketch.

The following are the methods available for editing a synchronous sketch which drives an ordered feature.

Directly edit the synchronous sketch

Step 1: Turn on the display of the driving synchronous sketch.

Step 2: Select a sketch element to edit.

You can move the selected sketch element and/or change the element properties on command bar.

Step 3: Edit sketch dimensions.

Note

You cannot edit or add synchronous sketch relationships using this method.

Note

As the synchronous sketch is edited, the ordered feature dynamically updates.

Feature edit (Edit Profile)

Step 1: Select the ordered feature to edit.

Step 2: Choose the Edit Profile command on the Feature Edit box.

Step 3: The modeling environment switches to synchronous. You can now fully edit the synchronous sketch.

Step 4: When the synchronous sketch edits are complete, switch to the ordered environment to observe the feature edits.

Feature edit (Dynamic Edit)

Step 1: Select the ordered feature to edit.

Step 2: Choose the Dynamic Edit command on the Feature Edit box.

Step 3: The driving synchronous sketch appears. Make edits to synchronous sketch.

Synchronous sketch behavior in ordered modeling

- Synchronous sketch dimensions are not migrated to ordered features.
- Synchronous sketches are not consumed when creating an ordered feature.
- Synchronous sketches can drive ordered features.

- Synchronous sketches appear while in the ordered environment.
- Regions are disabled.
- Synchronous sketches appear in the synchronous sketch style and colors.
- When using the Select Tool in the ordered environment, synchronous sketch elements locate as individual elements.
- Synchronous sketches can be moved using the steering wheel handle. The entire sketch moves (not single elements).
- In the ordered environment, synchronous sketch geometry or relationships commands are not available.
- Synchronous and ordered sketches cannot be copied while in ordered environment.

Lesson

5 *Drawing ordered sketches of parts*

Drawing ordered sketches allows you to establish the basic functional requirements of a part before you construct any features. You can draw a sketch on any reference plane using the Sketch command in the Part and Sheet Metal environments. Then you can use these sketches to create profile-based features.

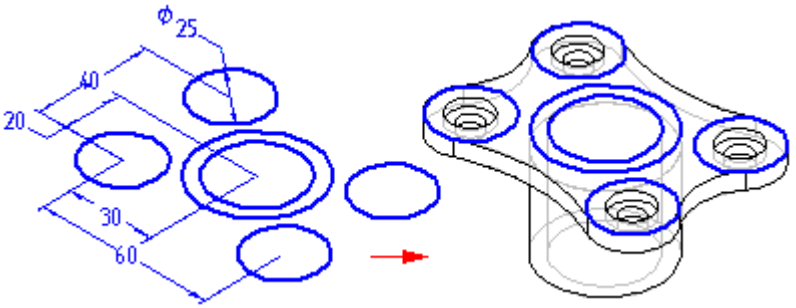

Sketching a part before modeling it gives you several advantages:

- Allows you to draw multiple profiles on one reference plane.
- Allows you to define relationships, such as tangency or equality, between profiles on different reference planes.
- Allows you to draw the profiles you want without creating the subsequent features until later.

Drawing ordered sketches

When you click the Sketch button and then select a reference plane or planar face, a profile view is displayed. You can then use the drawing commands to draw 2D geometry.

The sketch elements you draw are assigned to the active layer. For example, when working with a complex sketch that will be used to construct a lofted feature, you may want to arrange the elements on multiple layers.

Note

For more information about 2D drawing in Solid Edge, see the following related topics: Drawing in Solid Edge and Drawing Profiles.

You can add dimensions and relationships to control the positions and sizes of the profiles. You can also define functional relationships using the Variables command. You can use the Save and Save All commands to save the sketch while you create them. When you have finished drawing, close the profile view using the Return button on the command bar.

For more information on drawing sketches, see the Drawing 2D elements Help topic.

Sketches and PathFinder

Sketches are represented in the PathFinder tab just like features are. You can display or hide them from the feature tree with the PathFinder Display: Sketches command on the shortcut menu. You can use PathFinder to reorder or rename a sketch just as you would any feature.

Displaying sketches

You can control the display of all the sketches in a document or individual sketches. To display or hide all sketches, use the Show All: Sketches and Hide All: Sketches commands. To display or hide individual sketches, select a sketch in the application window or PathFinder, then use the Show and Hide commands on the shortcut menu.

You can also control the display of elements in a sketch by assigning the sketch elements to a logical set of layers, and then display or hide the layers to control the display of the sketch elements.

When a sketch is active, it is displayed using the Profile color. When a sketch is not active, it is displayed using the Construction color. You can set the colors you want using the Options command.

Using sketches to construct features

You can use sketches to construct features in the following ways:

- Directly, by clicking the Select From Sketch button on the feature command bar.
- Indirectly, by clicking the Draw button on the feature command bar and then associatively copying sketch geometry onto the active profile plane using the Include command.

Using sketches directly

You can use sketch profiles directly if no modifications to the profile are required. When constructing an ordered feature, click the Select From Sketch button on the feature command bar. You can then select one or more sketch profiles. When you click the Accept button on the command bar, the profiles you selected are checked to make sure they are valid for the type of feature you are constructing. For example, if you are constructing an ordered base feature, the profile you select must be closed. If you select an open profile or more than one profile, an error message is displayed. You can then select the Deselect (x) button on the command bar to clear the selected profiles.

Ordered features constructed using sketched profiles are associative to the sketch and will update when the sketch is edited.

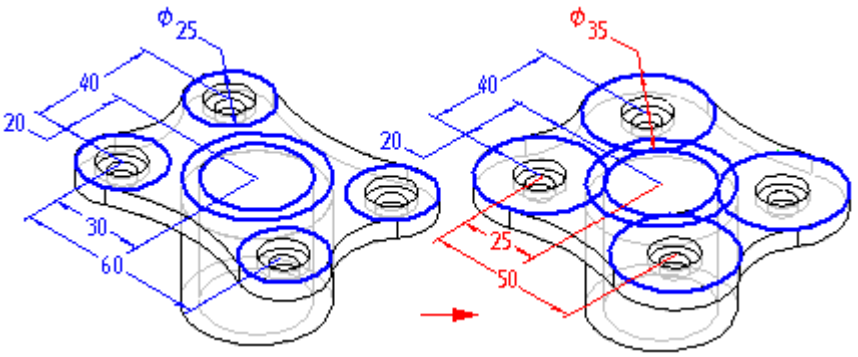

Using sketches indirectly

If the sketch profile requires modification before using it to construct a feature, you must first copy it to the active profile plane using the Include command. When you click the Draw Profile button on the feature command bar, and define the profile plane you want, a profile view is displayed. You can then use the Include command to copy elements from sketch profiles to the active profile plane.

After you have copied sketch elements, you can use the drawing commands to modify them. For example, you may need to add elements to the profile not contained in the sketch. You can also add dimensions and relationships between the elements on the active profile plane and the sketch.

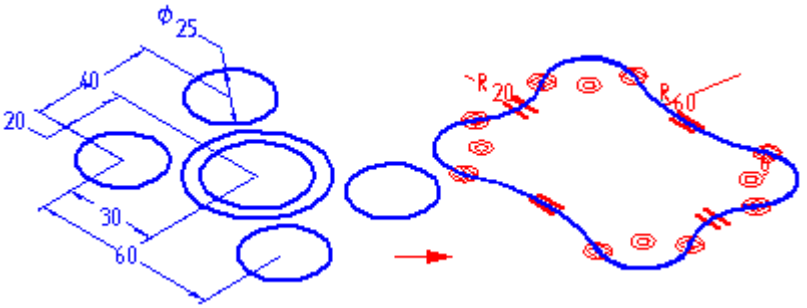

The sketched elements you copy are associative to the sketch and will update if the sketch dimensions are edited.

Editing and modifying sketches

You can modify sketch elements using the command bar or the element's handles. When you modify an element, other elements may also change.

Selecting Elements

You can use the Select Tool to select elements in several ways:

- To select an individual element, position the cursor over the element and click when the element highlights.
- To select multiple elements, press the **Ctrl** or the **Shift** key while you select the elements.
- To select all 2D elements, press **Ctrl+A**. The Select Tool command does not need to be active for this to work.
- To deselect an element, press the **Shift** or **Ctrl** key and click the element.
- To select multiple elements using a fence, drag the cursor to define a rectangular fence. You can use the Selection Options button on the Select Tool command bar to specify the selection criteria you want.

Command bars

After you select an element, you can modify it by changing its values on a command bar. For example, you can change the length of a line by typing a new value in the Length box on the command bar.

Element handles

You can use an element's handles to modify an element. An element handle is represented by a solid square on the element, such as the end of a line or the center of an arc. You can dynamically drag a handle to modify an element. First, select the element, then drag the handle to modify it.

- Lines - Drag a handle to modify the length or angle of a line.
- Arcs - Drag an endpoint, midpoint, or center point handle to modify an arc.
- Fillets and Chamfers - Drag the handle to modify the size of a fillet or chamfer.

Sketches and revolved features

Sketches that are used for constructing revolved ordered features must have an axis defined in the sketch. If you select a sketch profile that does not have an axis, an error message is displayed. You will have to cancel the revolved feature you are constructing, then open the sketch to define the axis.

Sketches and the swept and loft commands

Drawing sketches can be especially useful when constructing swept and lofted features. Because the Sketch command allows you to define relationships between profiles on separate planes, you can more easily define the relationships you need to control these features properly. Additionally, the ability to exit a sketch profile window without creating a feature can be especially useful when drawing the profiles for swept and lofted features.

Converting 2D drawing view data to a 3D sketch

You can use the Create 3D command to convert two-dimensional drawing view data into a three-dimensional sketch.

The command displays the Create 3D dialog box that prompts you for the drawing view elements you want to include in the sketch.

Before selecting the elements that you want to include in the sketches, you need to select a template to create a part, assembly, or sheet metal file. After you select a template file, specify the projection angle that you want to use when the sketches are created in the new document. After you specify the projection angle, select the view type of the elements you want to include in the sketch:

- Folded principal views are orthogonal or aligned with the primary view. You can select this view type to define the primary view.

- Folded auxiliary views are true auxiliary views that are generally derived from principal views and require a fold line to determine the edge or axis around which you want to fold the view.

- Copy views are not orthogonal and they may not actually align with the primary view. These views are placed as sketches on the same plane as the last principal view defined in the draft file.

  After you define this information, you are ready to select the geometry to create the sketches. You can include lines, arcs, circles, curves, and polylines and line strings created with imported data. You can drag the mouse to fence elements or press the **Shift** key and click each element to select more than one element.

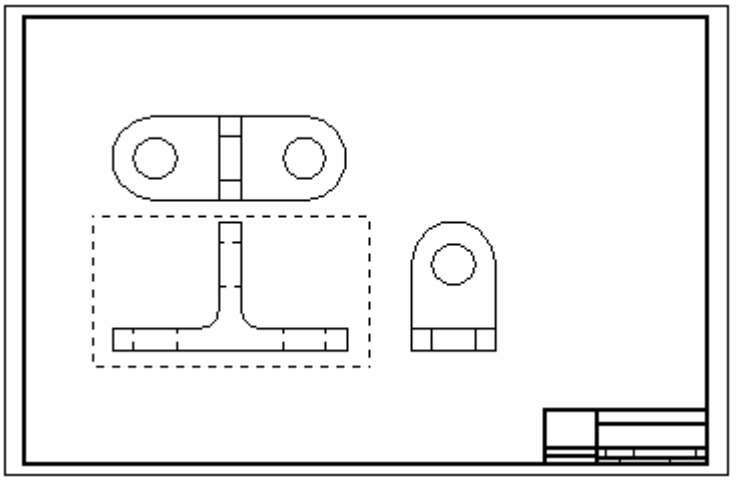

If you select the Fold Principal Views option or Fold Auxiliary Views option and it is not the primary view, you can click the Fold Line button after you select all of the elements for the view. The Fold Line button allows you to define a line or point in an orthogonal or auxiliary view on which to fold the primary view.

If you want to define another view, click the New View button and select the next view.

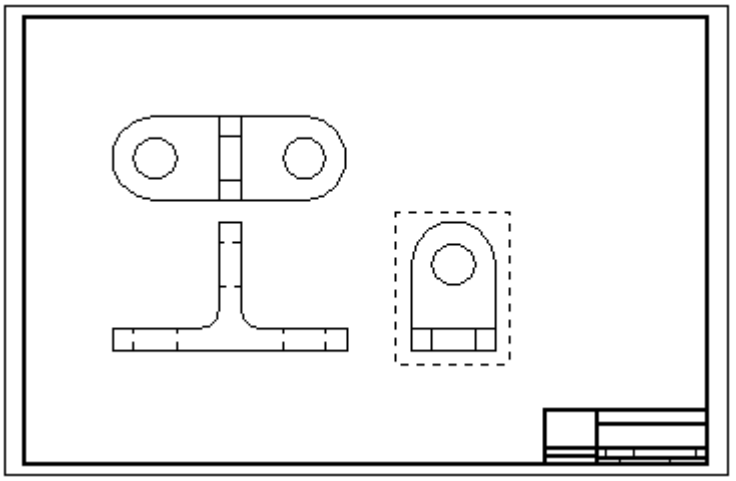

Continue this process to define any additional views.

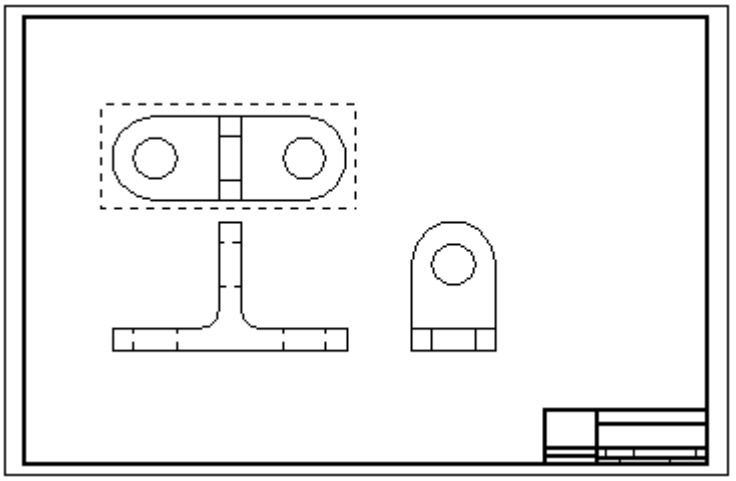

After you define all views, click the Finish button to launch the Part or Sheet Metal environment to create the model file in which the views are placed as sketches.

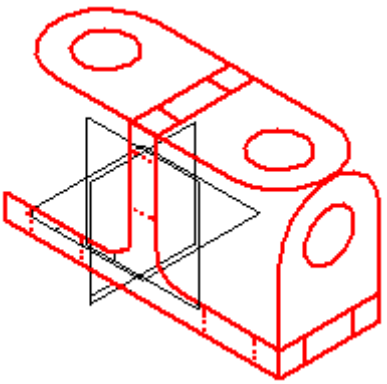

Lesson

6 Drawing commands

The commands for creating and manipulating sketch elements are located on the Sketching tab (1) in the Draw group (2).

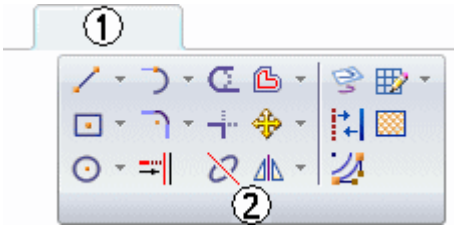

Drawing 2D elements

In Solid Edge, you can draw 2D elements to help you complete a variety of tasks. For example, you can use 2D elements to construct features in the Part environment and to draw layouts in the Assembly environment.

In the Draft environment, you can use 2D drawing tools to complete a variety of tasks such as drawing sketches from scratch on the 2D Model sheet or in 2D views, creating background sheet graphics, and defining cutting planes for section views. The drawing commands, relationships, and dimensions work similarly in all environments.

Drawing commands and tools

You can draw any type of 2D geometric element in Solid Edge, such as lines, arcs, circles, b-spline curves, rectangles, and polygons.

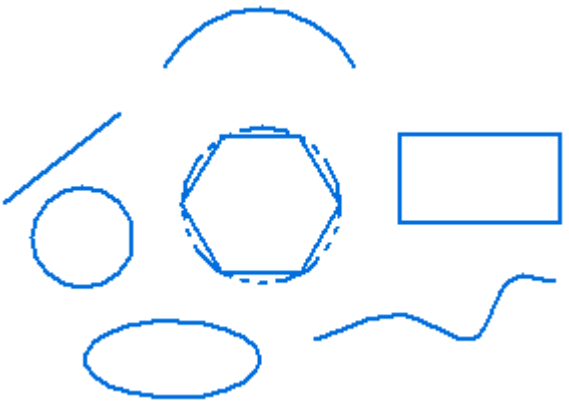

You can also use Solid Edge to do the following:

- Move, rotate, scale, and mirror elements
- Trim and extend elements
- Add chamfers and fillets
- Create precision graphics from a freehand sketch
- Change the color of elements

Tools that work with the drawing commands—IntelliSketch, Intent Zones, and Grid—allow you to easily relate elements to each other, define your drawing intentions as you sketch, and provide precise coordinate input relative to any key position in the drawing.

Drawing command input

Use Solid Edge drawing commands to provide input by clicking in the graphics window, or by typing values in command bar boxes. No strict input order is required.

It is often productive to use a combination of graphics window and command bar input. For example, you can type a line length in the command bar, press the **Enter** or **Tab** key to lock the value, then set the orientation angle of the line in the graphics window. Or you can use the drawing command dynamics to get a graphic idea of the size and orientation you want, then type values in the command bar boxes to provide more precise input.

You can use the Line Color option on the element command bar to apply colors to 2D elements. You can click the More option on the Colors dialog box to define custom colors.

Drawing dynamics

As you draw, the software shows a temporary, dynamic display of the element you are drawing (1). This temporary display shows what the elements will look like if you click at the current cursor position.

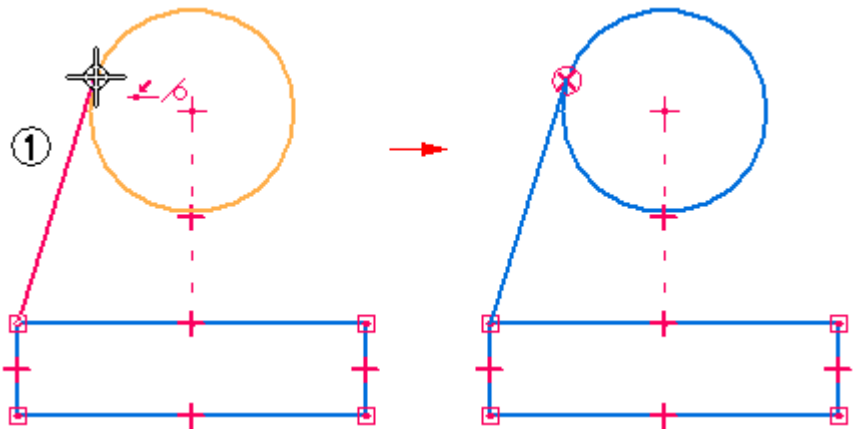

Until you click the point that completely defines the element that you are drawing, values in the command bar boxes update as you move the cursor. This gives you constant feedback on the size, shape, position, and other characteristics of the elements you draw.

When you lock a value by typing it into a command bar box, the dynamic display of the element you are drawing shows that the value is locked. For example, if you lock the length of a line, the length of the dynamic line does not change as you move the cursor to set the angle. If you want to free the dynamics for a value, you can clear the value box by double-clicking in the box and pressing the **Backspace** or **Delete** key.

Applying and displaying relationships

As you draw, IntelliSketch recognizes and applies 2D relationships that control element size, shape, and position. When you make changes, relationships help the drawing retain the characteristics you do not want altered.

When a relationship indicator is displayed at the cursor, you can click to apply that relationship. For example, if the horizontal relationship indicator is displayed when you click to place the end point of a line, the line will be drawn exactly horizontal. You can also apply relationships to elements after you draw them.

Relationship handles displayed on the 2D geometry show you how elements are related. You can remove any relationship by deleting its handle. You can display or hide the relationship handles with the Relationship Handles command.

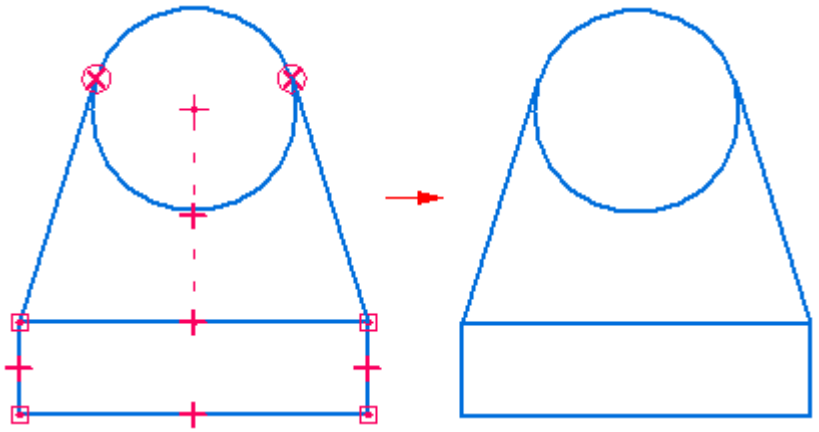

Maintaining relationships

You can draw and modify 2D elements in the way that best suits your design needs. You can make your assembly layouts and drawings associative by applying relationships, or you can draw them freely, without relationships. When you draw 2D elements in a part document, 2D relationships are maintained.

Maintaining relationships between 2D elements makes the elements associative (or related) to each other. When you modify a 2D element that is related to another 2D element, the other element updates automatically. For example, if you move a circle that has a tangent relationship with a line, the line also moves so that the elements remain tangent.

You can draw elements freely, or non-associatively. When you modify a non-associative portion of an assembly sketch or drawing, the changed elements move freely, without changing other portions of the design. For example, if you move a circle that is tangent to a line (but does not have a tangent relationship with the line) the line does not move with the circle.

To control whether you draw and modify 2D elements freely or associatively in layouts and drawings, use the Maintain Relationships command in the Assembly and Draft environments.

Note

When you construct a synchronous feature using the 2D elements, the sketch elements are moved to the Used Sketches collector in PathFinder.

How 2D relationships work

An element that has no relationships applied can be moved and changed in various ways. For example, when there are no relationships between two lines (1), the lines can be moved and changed without affecting each other. If you apply a perpendicular relationship between the two lines (2), and move one line, the lines remain perpendicular.

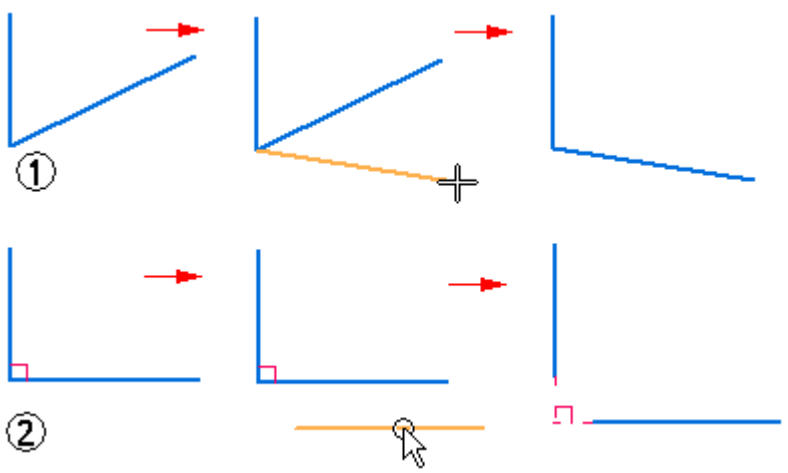

When you apply a relationship between elements, the relationship is maintained when you modify either element. For example:

- If a line and an arc share a tangent relationship, they remain tangent when either is modified.

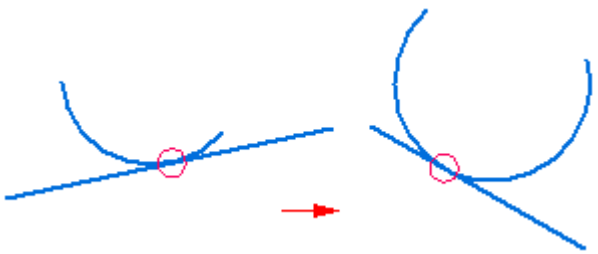

- If a line and arc share a connect relationship, they remain connected when either is modified.

Relationships also maintain physical characteristics such as size, orientation, and position.

- You can make the size of two circles equal with an equal relationship.
- You can make the orientation of two lines parallel with a parallel relationship.
- You can connect a line and an arc with a connect relationship.

A relationship can also maintain a physical characteristic of an individual element. For example, you can make a line horizontal. The line remains horizontal even if you change its position and length.

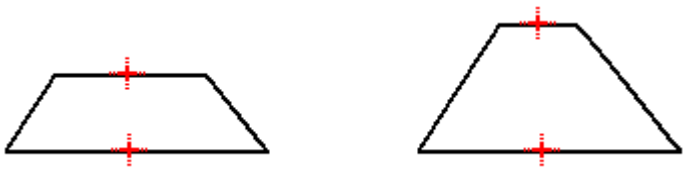

Construction elements

For 2D elements you draw in a part or assembly document, you can specify that the element is a considered a construction element. The Construction command on the Sketching tab allows you to specify that an element is a construction element. Construction elements are not used to construct features—they are used only as drawing aids. The line style for a construction element is dashed.

Intent Zones

Solid Edge uses intent zones to interpret your intentions as you draw and modify elements. Intent zones allow you to draw and modify elements many ways using few commands. You do not need to select a different command for every type of element.

How intent zones work

When you click to begin drawing certain elements, the software divides the region around the clicked position into four intent zone quadrants. For example, when drawing a line that is connected to a circle, four intent zones are displayed around the point you clicked (1).

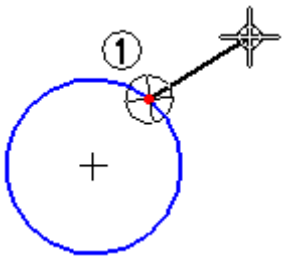

Two of these intent zones allow you to draw the line tangent to the circle. The other two intent zones allow you to draw the line perpendicular to, or at some other orientation relative to the circle.

By moving the cursor through one of these intent zones on the way to your next click location, you can tell the software what you want to do next. This allows you to control whether the line is tangent to the circle (1), perpendicular to the circle (2), or at some other orientation (3).

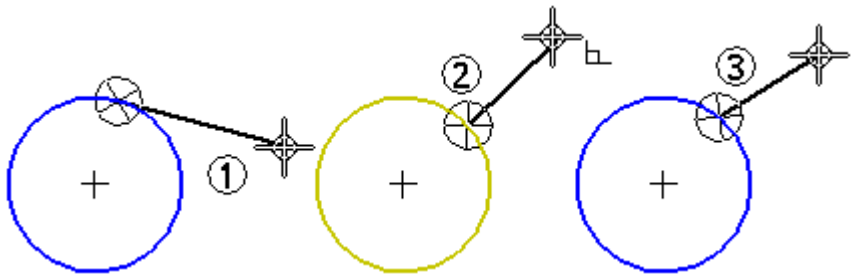

The last intent zone you move the cursor into is the active zone. To change the active intent zone, move the cursor back into the zone circle, and then move the cursor out through the intent zone quadrant to the position where you want to click next.

Intent zone size

You can change the size of the intent zones with the IntelliSketch command. The Intent Zone option on the Cursor tab on the IntelliSketch dialog box allows you to set the intent zone size.

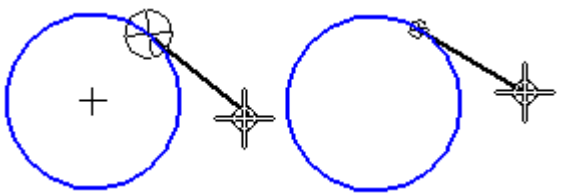

Drawing lines tangent or connected to curved elements

Using intent zones with the Line command, you can draw a line tangent to a circle or arc. Or you can draw a line that is connected to the circle or arc, but not tangent to it.

To draw an line tangent to a circle, first click a point on the circle (1) to place the first end point of the line. Then move the cursor through the tangent intent zone. As you move the cursor, the line remains tangent to the circle. Position the cursor where you want the second end point of the line (2), then click to place the second end point.

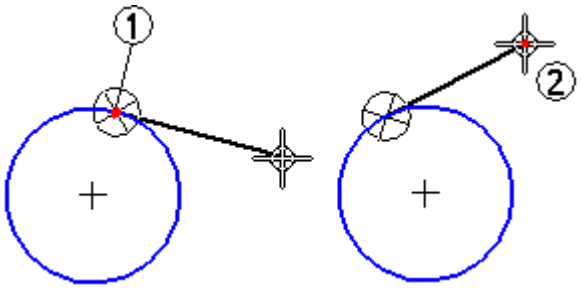

If you do not want the line to be tangent to the circle, you can move the cursor back into the intent zone region and out through one of the perpendicular zones (1) before clicking to place the second end point of the line. When you move the cursor through the perpendicular zones, you can also draw the line such that it is not perpendicular to the circle (2) and (3).

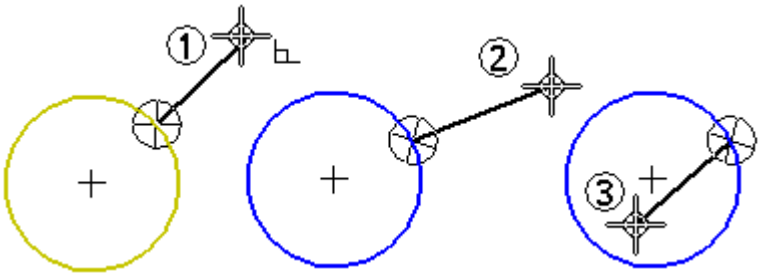

The Line command also allows you to draw a connected series of lines and arcs. You can use the L and A keys on the keyboard to switch from line mode to arc mode. When you switch modes, intent zones (1) and (2) are displayed at the last click point.

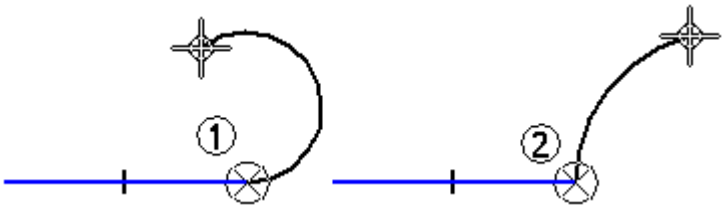

The intent zones allow you to control whether the new element is tangent to, perpendicular to, or at some other orientation to the previous element.

Drawing tangent or perpendicular arcs

You can use intent zones to change the result of the Tangent Arc command. To draw an arc tangent to a line, first click a point on the line to place the first end point of the arc. Then move the cursor through the tangent intent zone and click to place the second end point of the arc.

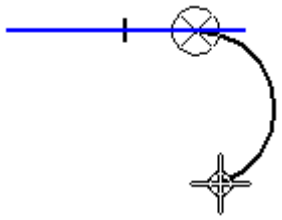

If you do not want the arc to be tangent to the line, you can move the cursor back into the intent zone region and out through the perpendicular zone before clicking to place the second end point of the arc.

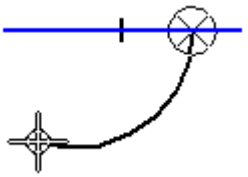

Drawing arcs by three points

When you use the Arc By 3 Points command, intent zones allow you to input the three points in any order. You can also use intent zones to change the arc direction. The intent zone used with the Arc By 3 Points command is not divided into quadrants.

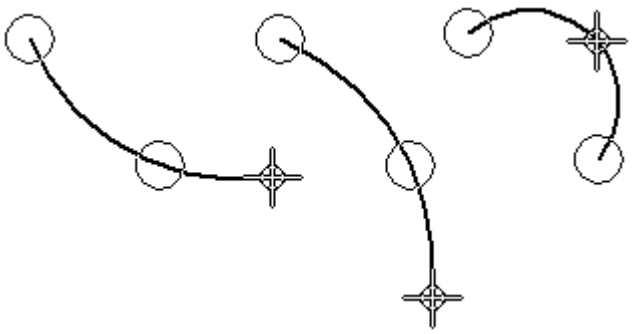

Construction Geometry

You can use construction geometry to help you draw and constrain a profile, but the construction geometry is not used to construct the surfaces for the feature. When the feature is created, the construction geometry is ignored. The Construction command is used to change a profile element or sketch element into a construction element.

- Construction elements use the double-chain line style so you can distinguish them from other elements.

- For example, you can use 45 degree construction lines to control the location of the tabs on the profile or sketch.

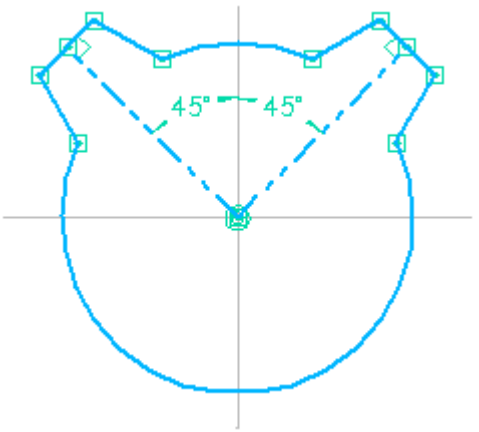

- The construction lines make it easier to edit the location of the tabs, but the construction lines are not used to produce the solid model.

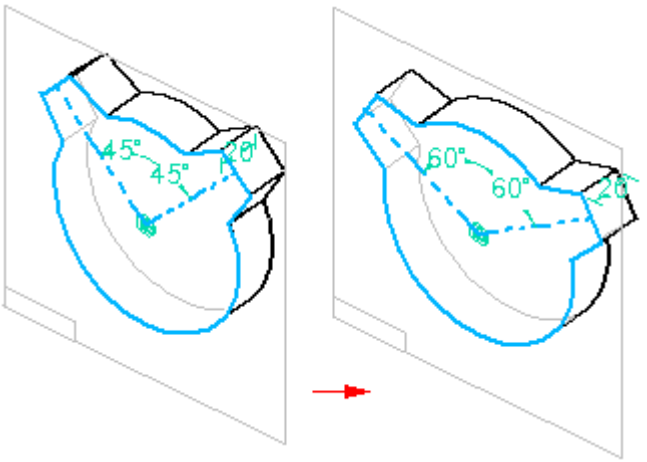

Modifying 2D elements

Solid Edge provides a wide range of tools for modifying 2D elements. 2D drawing and modification tools work together smoothly, so that you can modify your profiles, sketches, and 2D drawings as you work.

Using element handles

You can change the size, position, or orientation of an element with the cursor. When you select an element with the Select tool, its handles are displayed at key positions.

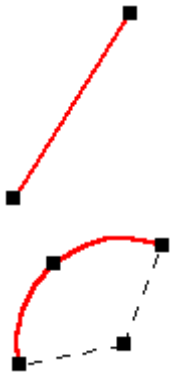

You can change the shape of a selected element by dragging one of its handles. The first figure shows the effect of dragging an end point handle. The second figure shows the effect of dragging the midpoint handle.

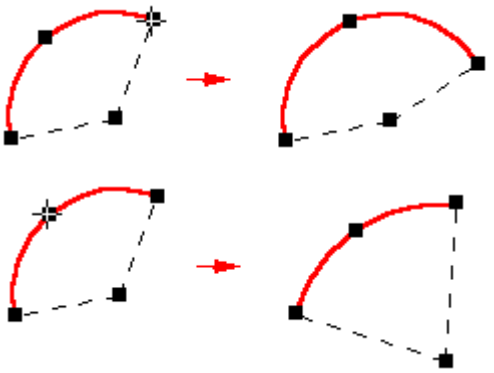

Moving and copying elements with the mouse

You can also drag a selected element to move it without changing its shape. Position the cursor so it is not over a handle, then drag the element to another location.

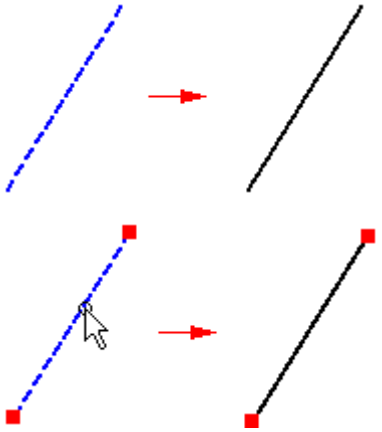

To copy an element, hold the Ctrl key while you drag.

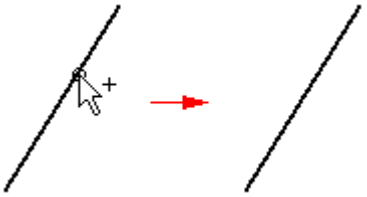

Applying relationships between elements

You can apply geometric relationships as you draw or after you draw. To apply a geometric relationship onto an existing element, select a relationship command and then select the element to which you want to add the relationship. When you apply a relationship to an element, the element is modified to reflect the new relationship.

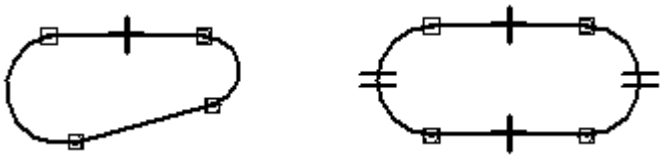

If a line and arc are not tangent (1), applying a tangent relationship modifies one or both elements to make them tangent (2).

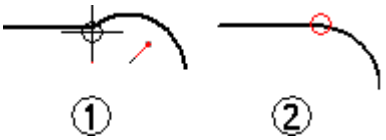

When you use relationship commands, the software allows you to select only elements that are valid input for that command. For example, when you use the Concentric command, the command allows you to select only circles, arcs, and ellipses.

Changing relationships

You can delete a relationship as you would delete any other element by selecting a relationship handle, then press the Delete key on the keyboard.

Dimensions as relationships

Driving dimensions are relationships that allow you to maintain characteristics such as the size, orientation, and position of elements. When you place a driving dimension on or between elements, you can change the measured elements by editing the dimensional value. You do not have to delete or redraw elements at different sizes.

For example, you can dimension the radius of an arc to maintain its size (1), and then edit the value of the radius dimension to change its size (2).

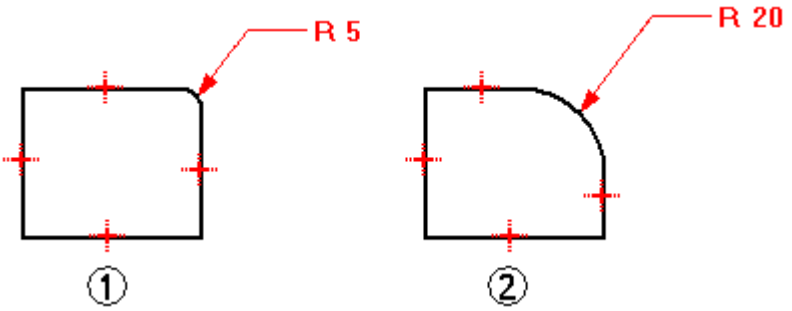

To create dimensional relationships, select a dimension command and click the elements you want to control.

Changing elements with relationships

When you modify 2D elements, elements with maintained relationships automatically update to honor the relationship. For example, if you move an element that shares a parallel relationship with another element, the other element moves as needed to remain parallel. If a line and an arc share a tangent relationship, they remain tangent when either is modified.

If you want to change an element by adding or removing a relationship, and the element does not change the way you expect, it may be controlled by a driving dimension. You can toggle the dimension from driving to driven, then make the change.

Element modification: trimming, extending, splitting, filleting, chamfering, offsetting, and stretching

Whether your sketching technique is to start big and whittle away or to start small and build up, relationships make it possible to sketch and evolve, rather than draw every element to its exact measurements. Solid Edge modification tools allow you to change a sketch and still maintain applied relationships.

Solid Edge provides commands to trim, extend, or split elements.

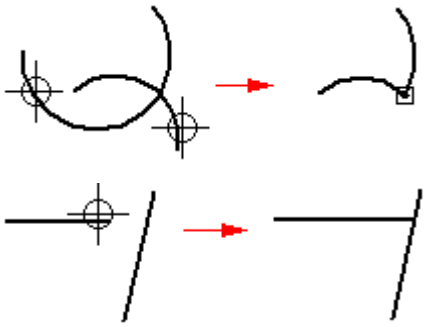

The Trim command trims an element back to the intersection with another element. To use the command, click on the part to trim.

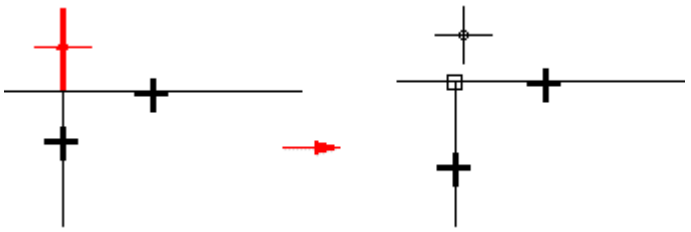

You can trim one or more elements by dragging the cursor across the part to trim.

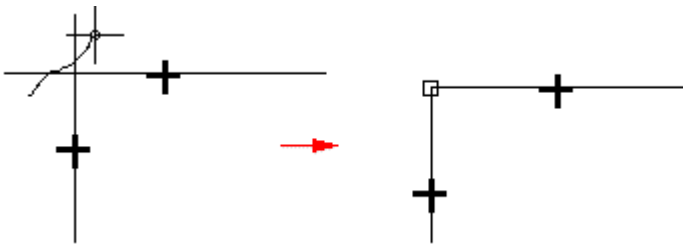

You can also select the elements you want to trim to. This selection overrides the default option of trimming to the next element only. To select an element to trim to, press the **Ctrl** key while selecting the element to trim to. For example, in normal operations, if you selected line (1) as the element to be trimmed, it would be trimmed at the intersection of the next element (2). However, you can select the edges (3) and (4) as the elements to trim to and the element will be trimmed at the intersection of those edges.

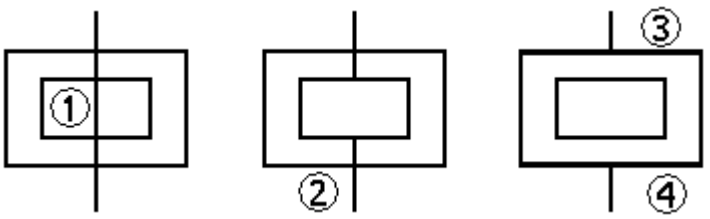

The Trim Corner command creates a corner by extending two open elements to their intersection.

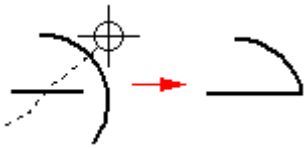

The Extend to Next command extends an open element to the next element. To do this, select the element and then click the mouse near the end to extend.

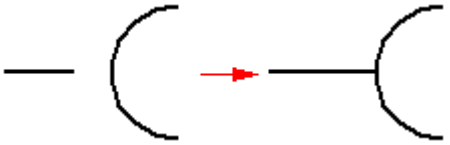

You can also select an element to extend to. This selection overrides the default option of extending to the next element only. To select an element to extend to, press the **Ctrl** key while selecting the element to extend to. For example, in normal operations, if you selected line (1) as the element to be extended, it would be extended to the intersection of the next element (2). However, you can select edge (3) to extend the line to that edge.

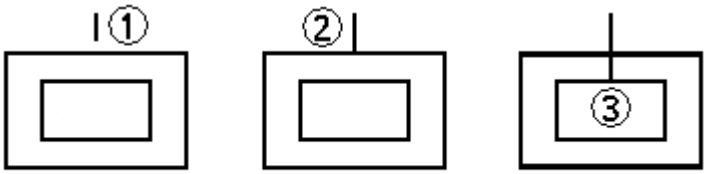

The Split command splits an open or closed element at the location you specify. When splitting elements, appropriate geometric relationships are applied automatically. For example, when splitting an arc, a connect relationship (1) is applied at the split point, and a concentric relationship (2) is applied at the center point of the arcs.

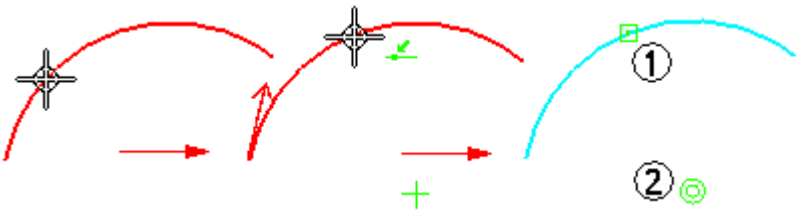

Fillet and Chamfer commands combine drawing and trimming operations.

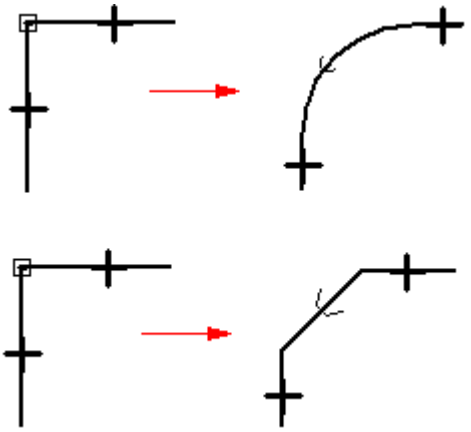

The Offset command draws a uniform-offset copy of selected elements.

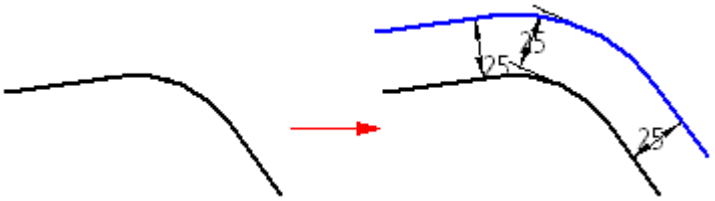

You cannot select model edges with this command. If you want to offset model edges, use the Include command.

The Symmetric Offset command draws a symmetrically offset copy of a selected center line.

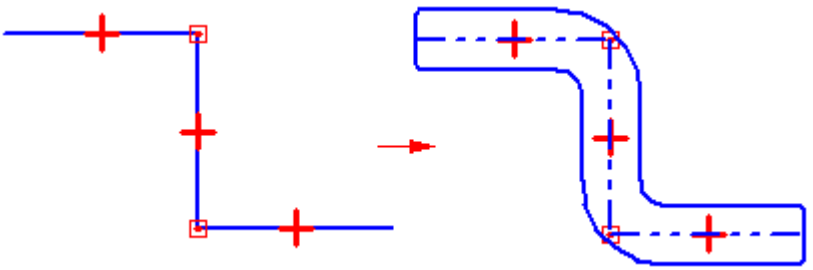

The Stretch command moves elements within the fence and stretches elements that overlap the fence.

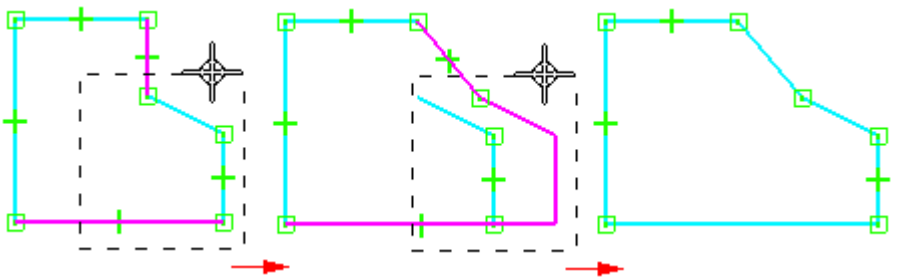

Relationships are added or removed as necessary during element modification. If you trim part of a circle and more than one arc remains, concentric and equal relationships are applied between the remaining arcs.

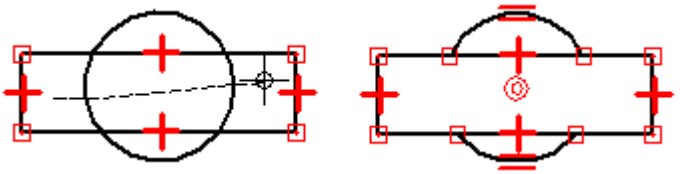

For example, you typically begin designing with key design parameters. You would draw known design elements in proper relation to one another (1) and then draw additional elements to fill in the blanks (2).

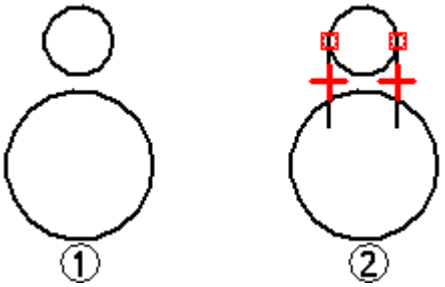

As you draw, you may need to modify elements to create a valid profile, or to make a drawing look the way you want it to (3-6). You can use modification commands such as Trim and Extend to modify the elements. The relationships are maintained and additional relationships are applied.

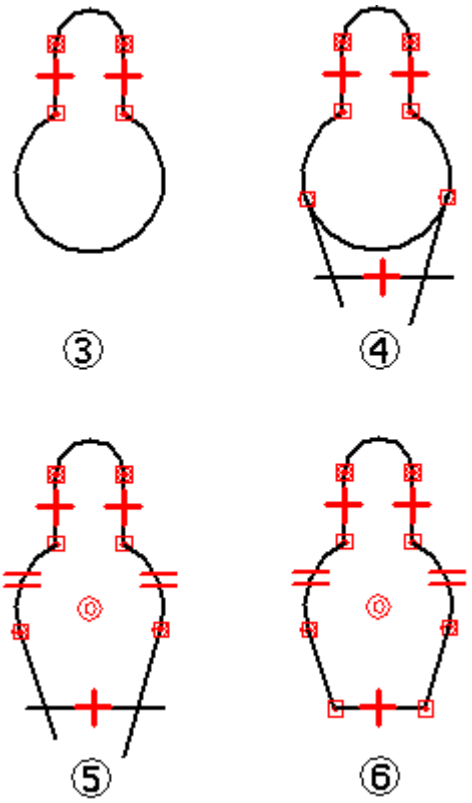

Element manipulation: rotating, scaling, mirroring, copying, and deleting

Tools are provided for moving, rotating, scaling, and mirroring elements. These tools can also be used for copying. For example, you can make a mirror copy, or you can cut or copy 2D elements from another application and paste them into the profile window, the assembly sketch window, or a drawing.

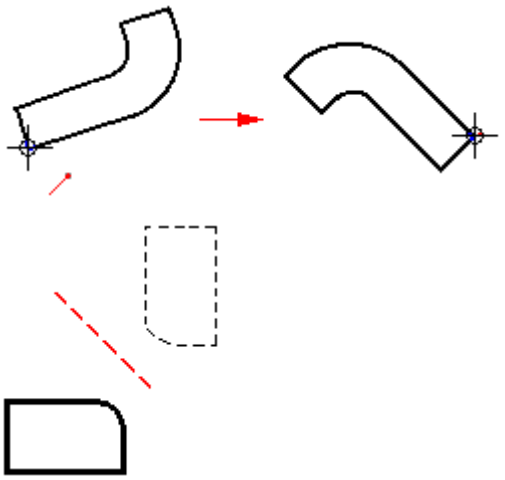

When you manipulate elements that have relationships, the relationships are retained when possible. For example, if you make a copy of two related elements, the relationship is also copied. However, if you copy one of two elements that are related to each other, the relationship is not copied.

Relationships that are no longer applicable after a manipulation are automatically deleted. For example, if you delete one of a pair of parallel lines, the parallel relationship is deleted from the remaining line.

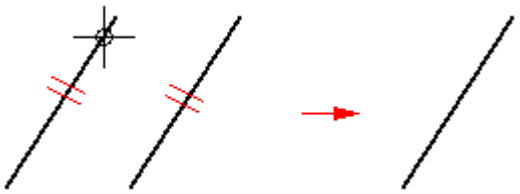

The Rotate command turns or turns and copies 2D elements about an axis. The command requires you to specify a center point for the rotation (1), a point to rotate from (2), and a point to rotate to (3).

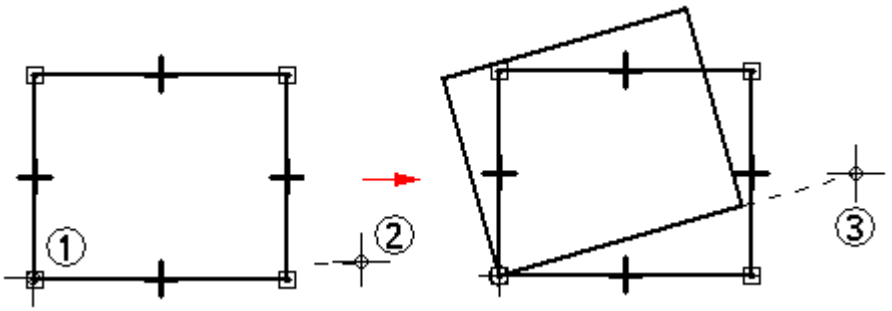

The Scale command uses a scale factor to proportionally scale or scale and copy 2D elements.

The Mirror command mirrors or mirror copies 2D elements about a line or two points.

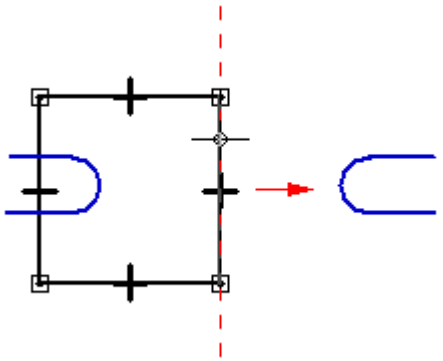

The Delete command removes 2D elements from the profile or sketch window.

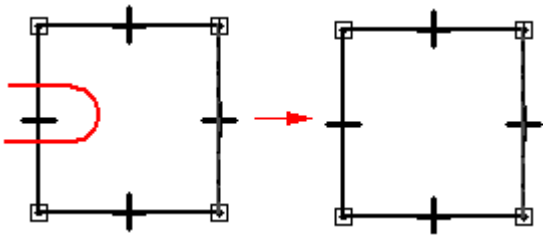

Applying colors and patterns to closed boundaries

A boundary in a Solid Edge drawing, sketch, or profile can be filled with a pattern or solid color.

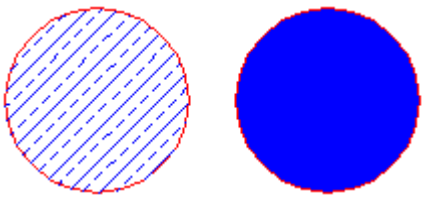

A fill is like other elements in that you can format it and move it around, but the fill is always associated with a boundary. The boundary can be made up of more than one element.

Modifying fills

A fill can exist only inside a closed boundary. A fill is associative, which means it maintains its original orientation to an element regardless of the way you manipulate the element. For example, if you move the boundary, the fill moves with it. If you change the boundary, the fill changes to conform to the new boundary area. You can delete a fill the same way you would delete an element.

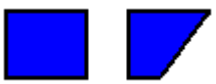

Fill insertion point

- When you click inside an object to fill it, the cursor location designates the fill insertion point.

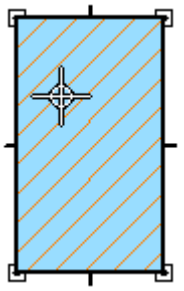

- The fill insertion point is also the fill handle. You can select the fill handle and drag the fill to another object.

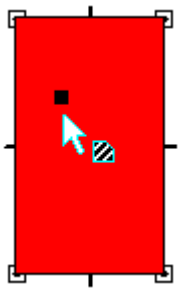

- If you use the Redo Fill option to refill the area based on a new boundary, the insertion point designates which side of the object will be refilled.

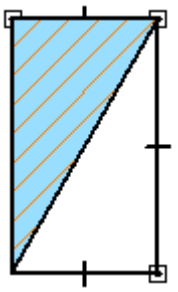

Formatting fills

Formatting a fill is similar to applying formats to an element. You can apply unique formats to fills with the Properties command or by setting options on the Fill command bar. To make several fills look the same, you can apply a fill style by selecting the style on the command bar.

The software provides fill styles for various engineering standards, such as ANSI, ISO, and AIA. You can modify an existing fill style or create a new one with the Style command.

Lesson

7 *Sketch geometric relationships*

The sketch relationship commands are located on the Sketching tab (1) in the Relate group (2).

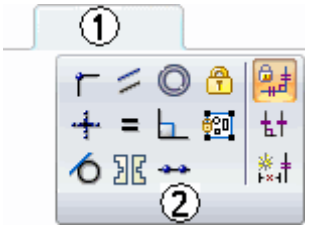

Sketch relationships do not migrate to the feature created from them.

Geometric Relationships

Geometric relationships control the orientation of an element with respect to another element or reference plane. For example, you can define a tangent relationship between a line and an arc. If the adjoining elements change, the tangent relationship is maintained between the elements.

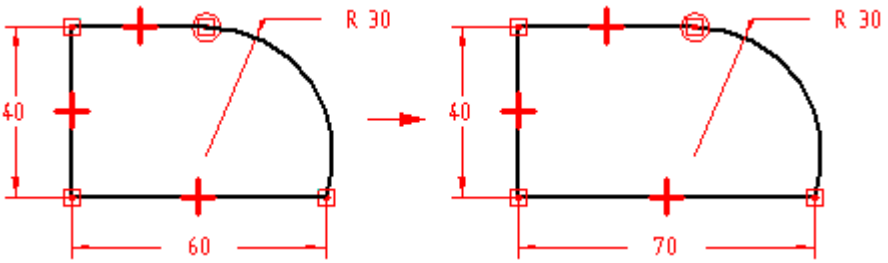

Geometric relationships control how a sketch changes when edits are made. IntelliSketch displays and places geometric relationships as you draw. After you complete the sketch, you can use the various relationship commands and the Relationship Assistant to apply additional geometric relationships.

Relationship Handles

Relationship handles are symbols used to represent a geometric relationship between elements, keypoints, and dimensions, or between keypoints and elements. The relationship handle shows that the designated relationship is being maintained.

Relationship	Handle
Collinear	
Connect (1 degree of freedom)	
Connect (2 degrees of freedom)	
Concentric	
Equal	
Horizontal/Vertical	
Tangent	
Tangent (Tangent + Equal Curvature)	
Tangent (Parallel Tangent Vectors)	
Tangent (Parallel Tangent Vectors + Equal Curvature)	
Symmetric	
Parallel	
Perpendicular	
Fillet	
Chamfer	
Link (local)	
Link (peer-to-peer)	
Link (sketch to sketch)	
Rigid Set (2-D elements)	

In some cases, more than one relationship may be required and displayed at the same location on the profile. For example, a connect relationship and a tangent relationship can be used where an arc meets a line.

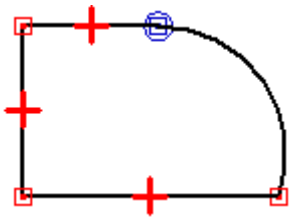

Displaying Parents for a Relationship

When modifying a profile or sketch, it can be useful to determine the parent elements for a relationship. When you select a geometric relationship, the parents highlight. For example, when you select the horizontal relationship shown in the first illustration, the left vertical line and the circle are highlighted as the parent elements.

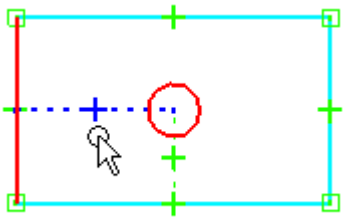

This can be useful when multiple relationships are in the same location and you need to delete one relationship. In this situation, you can use QuickPick to highlight the relationship, and the parent elements are displayed using a dashed line style.

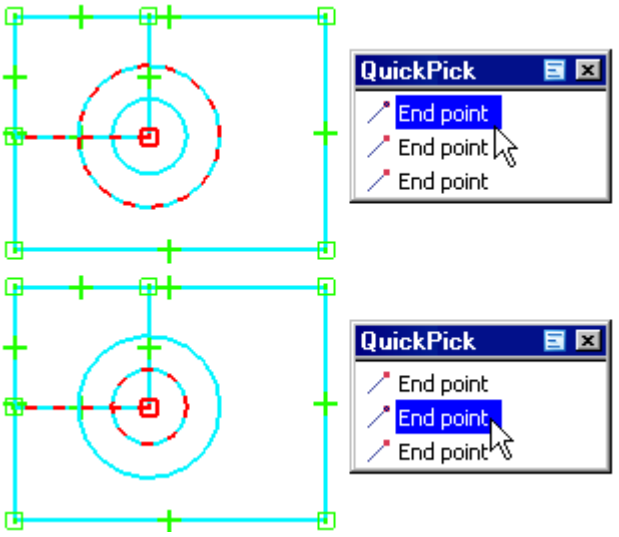

Collinear

The Collinear command forces two lines to be collinear. If the angle of one of the lines changes, the second line changes its angle and position to remain collinear with the first.

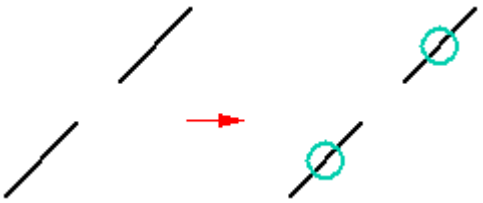

Connect

The Connect command joins a keypoint on one element to another element, or element keypoint. For example, you can apply a connect relationship between the endpoints of two elements. Establishing a connect relationship between element endpoints helps you draw a closed sketch. The symbol for connected endpoints displays a dot at the center of a rectangle.

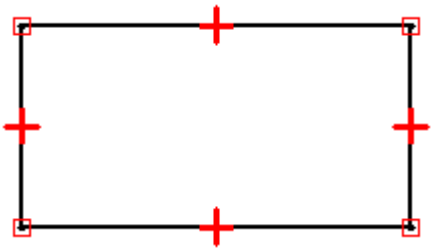

You can also use the Connect command to connect the endpoint of an element to any point on another element, not necessarily an endpoint or keypoint. This is called a point-on-element connection, and the symbol resembles an X. For example, the endpoint of the top horizontal line on the right side of the profile is connected to the vertical line, but not at an endpoint.

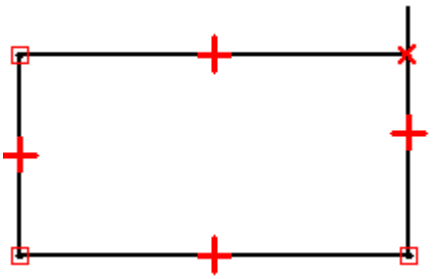

When drawing profiles, pay close attention to the relationship indicator symbols that IntelliSketch displays, and try to draw the elements as accurately as possible. Otherwise, you may accidentally apply a connect relationship in the wrong location, which can result in an invalid profile. For example, for a base feature you may accidentally create an open profile, rather than the required closed profile.

Tangent

The Tangent command maintains tangency between two elements or element groups.

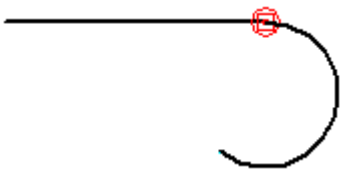

When you apply a tangent relationship, you can use the Tangent command bar to specify the type of tangent relationship you want:

- Tangent
- Tangent + Equal Curvature
- Parallel Tangent Vectors

- Parallel Tangent Vectors + Equal Curvature

A simple tangent relationship is useful when you want a line and an arc, or two arcs to remain tangent. The other options are useful in situations where a b-spline curve must blend smoothly with other elements. The Tangent + Equal Curvature, Parallel Tangent Vectors, and Parallel Tangent Vectors + Equal Curvature options require that the first element you select is a b-spline curve.

Note

You can also apply a tangent or connect relationship to an end-point connected series of elements to define a profile group. For more information on profile groups, see the Working With Profile Groups topic.

Perpendicular

The Perpendicular command maintains a 90-degree angle between two elements.

Horizontal/Vertical

The Horizontal/Vertical command works in two modes. In one mode, you can fix the orientation of a line as either horizontal or vertical by selecting any point on the line that is not an endpoint or a midpoint.

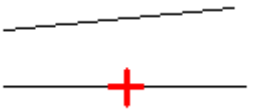

In the second mode, you can apply vertical/horizontal relationships between graphic elements by aligning their midpoints, center points, or endpoints so that their positions remain aligned with respect to each other.

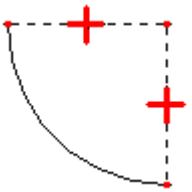

Equal

The Equal command maintains size equality between similar elements. When this relationship is applied between two lines, their lengths become equal. When applied between two arcs, their radii become equal.

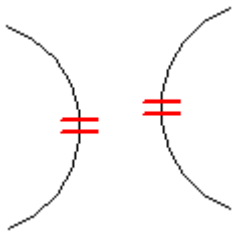

Parallel

The Parallel command makes two lines share the same angled orientation.

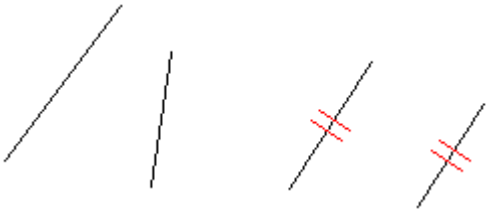

Concentric

The Concentric command maintains coincident centers for arcs and circles.

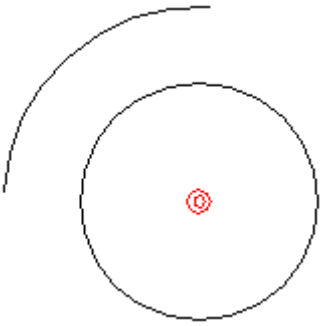

Symmetric

You can use the Symmetric command to make elements symmetric about a line or reference plane. The Symmetric command captures both the location and size of the elements.

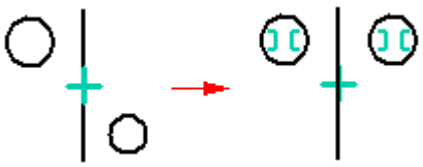

Rigid Set

You can use the Rigid Set command to add a rigid set relationship to a group of 2-D elements.

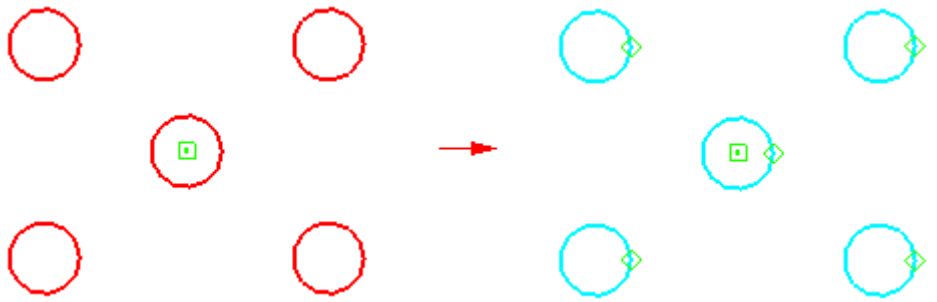

Drawing Tools

Solid Edge provides tools to help you draw quickly and precisely in a variety of situations.

Grid

Grids help you draw with precision when the endpoints of elements you are drawing fit within regular intervals.

IntelliSketch

IntelliSketch helps you create, and optionally maintain, geometric relationships between elements. As you draw, IntelliSketch recognizes the opportunity to relate new elements to existing elements and displays visual cues that help make elements connected, tangent, collinear, perpendicular, parallel, and so forth.

Based on your preference, Solid Edge will either maintain the relationships that IntelliSketch creates or only use IntelliSketch to create new elements with precision, without maintaining relationships as you add and change geometry.

Projection Lines

Projection lines help you maintain alignment of key points, for example between related 2D Drawing Views of a model. Projection lines fulfill the function of the squares, triangles, and parallel rules used in classical drafting.

Working with grids

The grid helps you draw and modify elements relative to known positions in the working window. It displays a series of intersecting lines or points, and X and Y coordinates, which enable you to draw 2D elements with precision. You can use the grid with all sketching, dimensioning, and annotation functions. It also works with IntelliSketch and the Select command.

For example, you can use the grid to:

- Draw elements at known locations, draw elements known distances apart, and so forth. For an example, see Help topic Draw a line with a grid.

- Align dimensions and annotations by snapping them to grid points or lines. Only bolt hole circles and center marks cannot be snapped to a grid. For an example, see Help topic Place a dimension or annotation using a grid.

synchronous environment

ordered environment 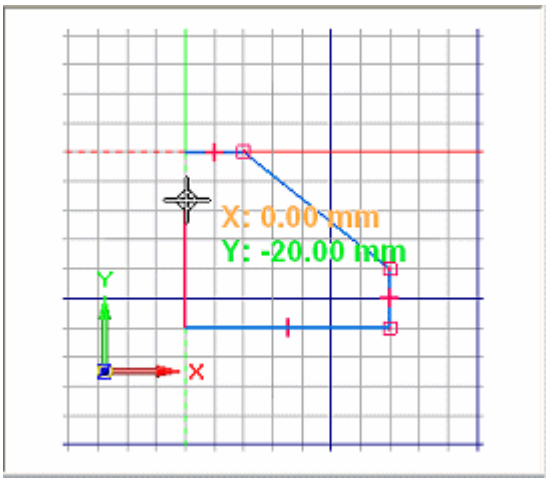

Displaying the grid and setting options

Use the Grid Options command to open the Grid Options dialog box, where you can turn the grid on and off. When the Show Grid option is set, the grid is displayed whenever you create or modify 2D elements.

You also can use the Grid Options dialog box to:

- Turn alignment lines on and off.
- Turn snap-to-grid on and off.
- Turn coordinate display on and off.
- Change grid spacing.
- Change grid line color.

To change the grid origin line colors, you must change the Select and Highlight colors on the Colors page in the Solid Edge Options dialog box.

How grids work in the ordered environment

The grid is displayed in Draft and in profile and sketch mode as you draw, dimension, and annotate 2D elements. The X and Y coordinates it displays are relative to an origin point (1), which you can position anywhere in the window. The origin point is marked by the intersection of the X and Y origin lines.

As you move the cursor, the horizontal and vertical distance between the cursor position and the origin point is dynamically displayed (2).

If the Snap To Grid option is on when you add dimensions and annotations, they will snap to grid lines and points.

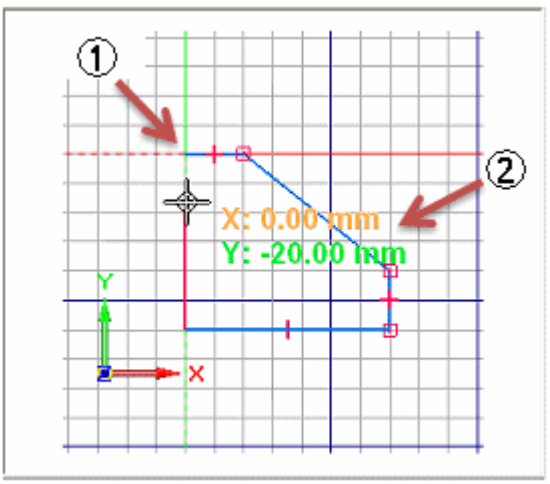

How grids work in the synchronous environment

The grid is available for drawing and editing 2D elements, and for adding 2D dimensions and annotations.

Grid visibility is somewhat different in Draft than in synchronous modeling environments. In Draft, when the grid is turned on, it is always visible. In synchronous modeling, the grid is visible only when a sketch plane is locked.

In 3D environments, the grid helps you draw horizontally and vertically with respect to part edges and model faces by displaying a series of intersecting lines or points, and by displaying alignment lines. The grid also helps you draw with precision by displaying X and Y coordinates that are relative to an origin point (1), which you can position anywhere in the window.

As you move the cursor, the horizontal and vertical distance (2) and orientation between the cursor position and the origin point is displayed and updated.

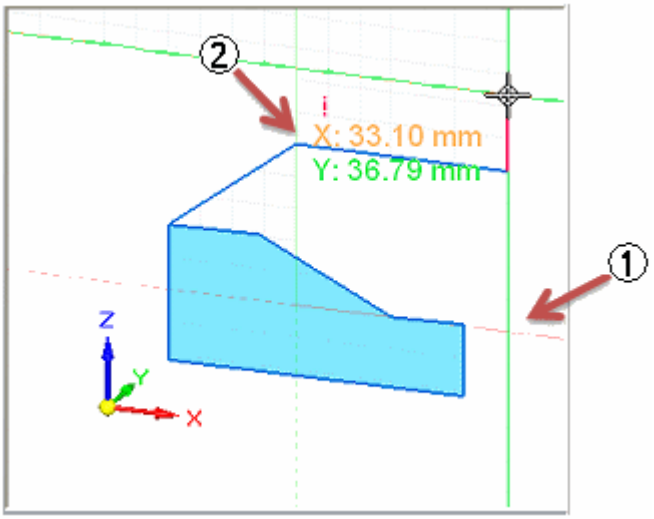

If the Snap To Grid option is on when you add dimensions and annotations, they will snap to grid lines and points.

Recognizing the grid origin

The grid origin is marked by the intersection of the X and Y origin lines.

- In ordered profile and sketch, the default display mode is a red dashed line for the X axis and a green dashed line for the Y axis. The user-defined grid origin point is marked by a circle and dot. The default origin is at the center of the profile or sketch reference plane.

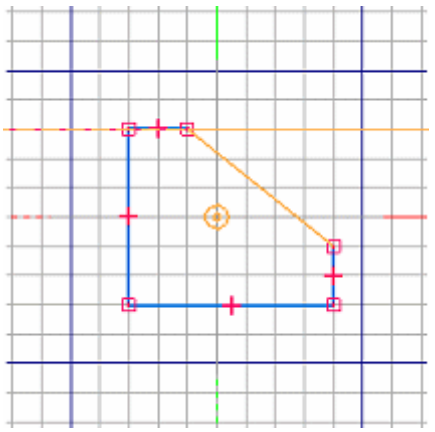

- In Draft, the default display mode is a red dashed line for the X axis and a magenta dashed line for the Y axis. The user-defined grid origin point is marked by a concentric circle and dot. The default origin is the (0,0) location of the drawing sheet.

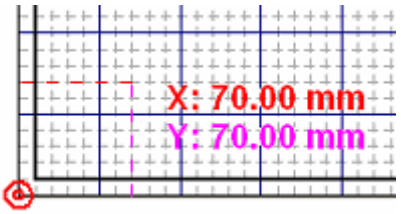

- In the synchronous modeling environment, the default display color scheme matches that of the user-defined origin triad in the center of the graphics window. The X axis is a red line, and the Y axis is green. These lines are solid in the positive direction and dashed in the negative direction. There is no marker at the user-defined origin point. The default origin is the 0,0,0 center of the currently locked sketch plane.

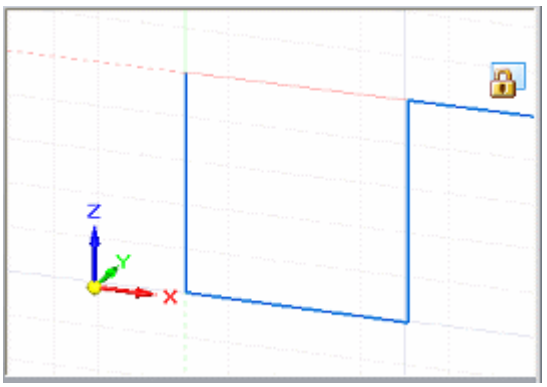

Moving the grid origin

You can move the grid origin point using either of these commands:

- Use the Reposition Origin command to move the origin to a user-defined location. This is helpful when you want to do any of the following:
  - Add dimensions or constraints that are horizontal or vertical to a model edge.
  - Draw lines and other elements at a precise distance from another element at a known location.
  - Offset a series of elements by the same distance from a known location.
- To automatically reset the origin point to match the origin of the drawing sheet or working plane, use the Zero Origin command .

  Note

  The Reposition Origin and Zero Origin commands are available in synchronous modeling environments only when a sketch plane is locked.

See the Help topic, Reposition the grid origin point.

Changing the grid orientation

In ordered profile and sketch, the default orientation for the x-axis of the grid is horizontal to the profile or sketch reference plane. You can reorient the x-axis to any angle using the Angle option on the Grid Options dialog box.

In the synchronous modeling environment, the orientation of the grid axes matches the origin axes of the currently locked sketch plane. When you lock onto a different sketch plane, the origin axes reorient to the new plane. You can use the Reposition Origin command to do the following:

- Change the grid angle. See the Help topic, Reposition the sketch plane origin.
- Ensure that dimensions placed on coplanar geometry remain horizontal and vertical. See the Help topic, Set sketch plane horizontal and vertical for dimensioning.

In Draft, the default orientation for the X-axis of the grid is horizontal. You can reorient the X-axis to any angle using the Angle option on the Grid Options dialog box.

IntelliSketch

IntelliSketch is a dynamic drawing tool used for sketching and modifying elements. IntelliSketch allows you to sketch with precision by specifying characteristics of the design as you sketch.

For instance, IntelliSketch allows you to sketch a line that is horizontal or vertical, or a line that is parallel or perpendicular to another line or tangent to a circle. You can also draw an arc connected to the end point of an existing line, draw a circle concentric with another circle, draw a line tangent to a circle—the possibilities are too numerous to list.

IntelliSketch places dimensions and geometric relationships on any new 2D elements as you draw them. You can use another tool, the Relationship Assistant, to place dimensions and relationships automatically on existing profile elements.

How IntelliSketch works

As you draw, IntelliSketch tracks the movement of the cursor and shows a temporary, dynamic display of the element you are drawing. This temporary display shows what the new element will look like if you click at the current position.

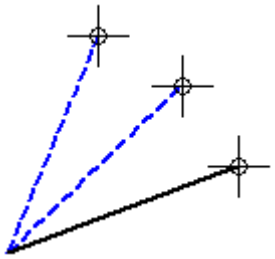

IntelliSketch gives you more information about the element you are drawing by displaying relationships between the temporary, dynamic element and the following:

- Other elements in the drawing
- Horizontal and vertical orientations
- The origin of the element you are drawing

When IntelliSketch recognizes a relationship, it displays a relationship indicator at the cursor. As you move the cursor, IntelliSketch updates the indicator to show new relationships. If a relationship indicator is displayed at the cursor when you click to draw the element, the software applies that relationship to the element. For example, if the Horizontal relationship indicator is displayed when you click to place the second end point of a line, then the line will be exactly horizontal.

IntelliSketch relationships

You can set the types of relationships you want IntelliSketch to recognize on the Relationships page on the IntelliSketch dialog box. IntelliSketch can recognize one or two relationships at a time. When IntelliSketch recognizes two relationships, it displays both relationship indicators at the cursor.

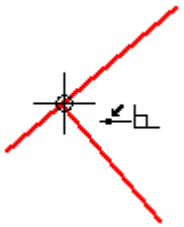

IntelliSketch locate zone

You do not have to move the cursor to an exact position for IntelliSketch to recognize a relationship. IntelliSketch recognizes relationships for any element within the locate zone of the cursor. The circle around the cursor crosshair or at the end of the cursor arrow indicates the locate zone. You can change the size of the locate zone with the IntelliSketch command on the Tools menu.

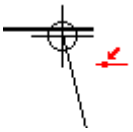

Alignment indicators

IntelliSketch displays a temporary dashed line to indicate when the cursor position is horizontally or vertically aligned with a key point on an element.

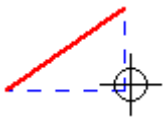

Infinite elements

IntelliSketch recognizes the Point On Element relationship for lines and arcs as if these elements were infinite. In the following example, IntelliSketch recognizes a Point On Element relationship when the cursor is positioned directly over an element and also when the cursor is moved off the element.

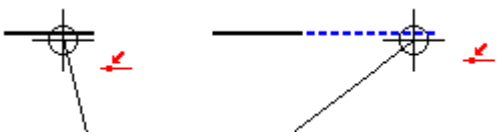

Center points

IntelliSketch displays an indicator at the center point of an arc or circle to make this keypoint easy to locate.

Snapping to points

When drawing and manipulating 2D elements, you can use shortcut keys with QuickPick to snap to keypoints and intersection points. This also applies the point coordinates as input to the command in progress.

Once you have highlighted the element you want to snap to with the cursor, you can use these shortcut keys to snap to points:

- Midpoint - press M.
- Intersection point - press I.
- Center point - press C.
- Endpoint - press E.

To learn more, see Selecting and snapping to points.

Sweep angle lock at quadrants

When you draw tangent or perpendicular arcs, the arc sweep angle locks at quadrant points of 0, 90, 180, and 270 degrees. This allows you to draw common arcs without typing the sweep value on the command bar.

A temporary dashed line appears from the arc endpoint to the center line of the arc to notify you that the arc is at a quadrant.

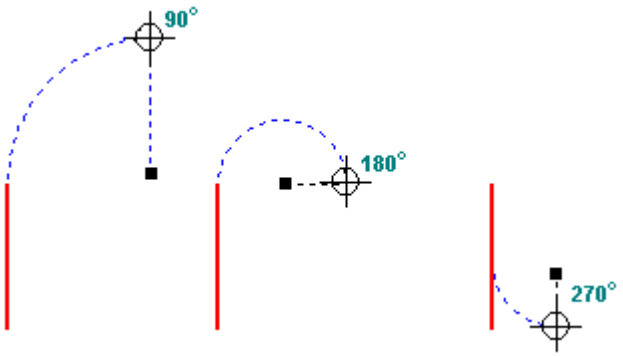

Automatic dimensioning

You can use options on the Auto-Dimension page in the IntelliSketch dialog box to automatically create dimensions for new geometry. The page provides several options to control when the dimensions are drawn as well as whether to use dimension style mapping or not.

You can use the Auto-Dimension command as a quick way to turn automatic dimensioning on and off.

Example: Draw a horizontal line

You can use IntelliSketch to draw a line that is exactly horizontal. You can apply a horizontal relationship as you draw the line, or draw the line without a horizontal relationship.

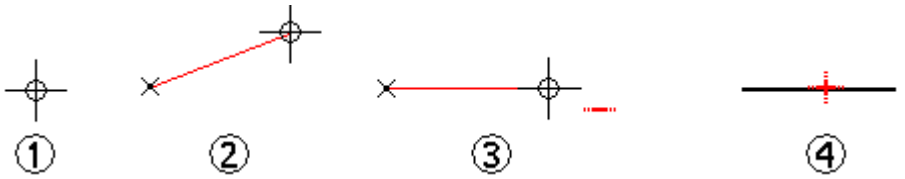

1. Choose the IntelliSketch command on the Home tab or the Sketching tab.

2. In the IntelliSketch dialog box, on the Relationships tab, set the Horizontal Or Vertical option, and then click OK.

3. Choose the Line command.

4. Click where you want to place the first end point of the line, anywhere in the application window (1).

5. Move the cursor around in the window (2). Notice that the dynamic line display always extends from the end point you just placed to the current cursor position. You may also see IntelliSketch relationship indicators displayed at the cursor.

6. Move the cursor to make the dynamic line approximately horizontal.

7. When the IntelliSketch Horizontal relationship indicator is displayed at the cursor (3), click to place the second end point.

IntelliSketch places a horizontal relationship handle on the new line (4).

Tip

Relationship handles can be displayed or hidden with the Relationship Handles command.

Tip

To snap to an intersection point or a keypoint, locate the element(s) with the cursor and then press one of these shortcut keys.

- Midpoint of a line or arc: press M.
- Intersection point of lines, circle, curves, and arcs: press I.
- Center point of a circle or arc: press C.
- Endpoint of a line, arc, or curve: press E.

For intersection points—If there are multiple eligible points located, then QuickPick opens and lists them. In QuickPick, click to select the point you want.

Example: Draw a line connected to another line

You can use IntelliSketch to connect an element you are drawing with an existing element. You can apply a connect relationship as you draw the lines, or draw the line without a connect relationship.

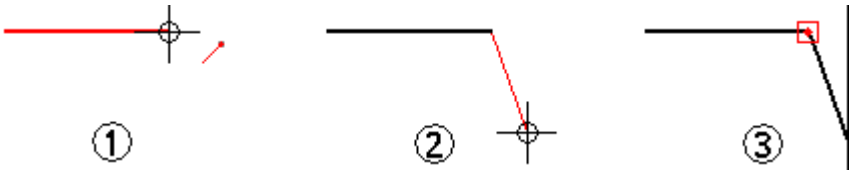

1. Choose the IntelliSketch command .
2. In the IntelliSketch dialog box, on the Relationships tab, set the End Point option, and then click OK.
3. Choose the Line command.
4. Move the cursor to the end of a line in the application window. As you move the cursor over it, the line is highlighted and IntelliSketch displays the End Point relationship indicator at the cursor.
5. While IntelliSketch displays the relationship indicator, click to place the first end point of the new line (1). This end point is connected to the end point of the previous line.

   Tip

   Rather than clicking, you can snap to the line end point nearest the cursor by pressing the **E** key.

6. Click where you want to place the second end point of the new line.
7. The new line and the previous line have connected end points (2).

IntelliSketch places a connect relationship handle at the point where the two lines connect (3).

Tip

Relationship handles can be displayed or hidden with the Relationship Handles command.

Tip

Relationships are maintained only if the Maintain Relationships command is set.

Tip

To snap to a keypoint or intersection point, locate the element(s) with the cursor and then press one of these shortcut keys.

- Midpoint of a line or arc: press M.
- Intersection point of lines, circle, curves, and arcs: press I.
- Center point of a circle or arc: press C.
- Endpoint of a line, arc, or curve: press E.

For intersection points—If there are multiple eligible points located, then QuickPick opens and lists them. In QuickPick, click to select the point you want.

Projection lines

Projection lines are extensions of lines that assist in 2D drawing.

- You can use projection lines to help you create new geometry, and any constraints you create with them remain active even after you turn projection lines off. For example, in a drawing, you can use projection lines on an auxiliary view to enable creation of additional views with proper alignment and size.

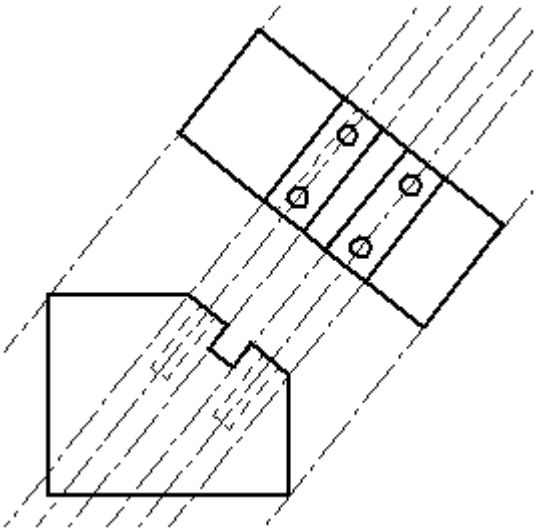

- You can create a line with the projection line option set, or you can edit an existing line and set the projection line property later.

- You can place dimensions and annotations to projection lines. Dimensions and annotations connect to the defining segment of the projection line (the original 2D line on which the projection line is based).

Projection lines are available as a line property on the Line command bar and on the Format page of the Element Properties dialog box.

Distance and area measurement

You can measure distances or areas, even when you are in the middle of another task. To set the units for measuring distances or areas, use the Properties command on the Application menu.

Measuring distances in 2D

In the Draft environment, you can measure distance using the Measure Distance command. These commands measure linear distances or measure the cumulative linear distance along a series of points. The first point you click establishes the origin of the measurement (1). After that, you can select any keypoint to see the distance between it and the origin, as well as the delta distance along each principal axis (2).

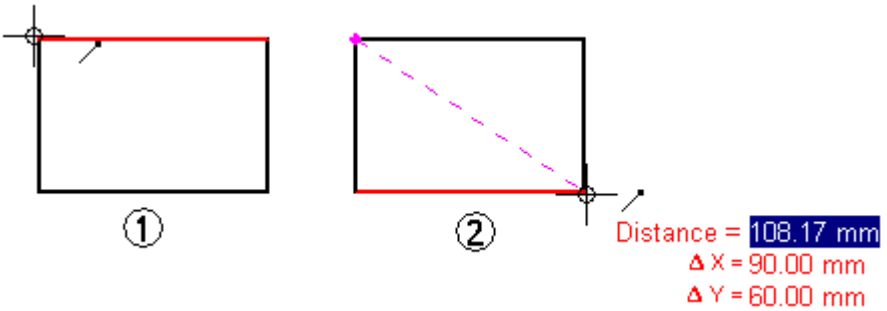

Clicking the keypoint adds it to a series of measurement points. Then you can select another point to see the new linear distance and deltas (3), or click it to see the distance between the last two points and the total cumulative distance from the origin to the last point (4). Click the right button to reset the command.

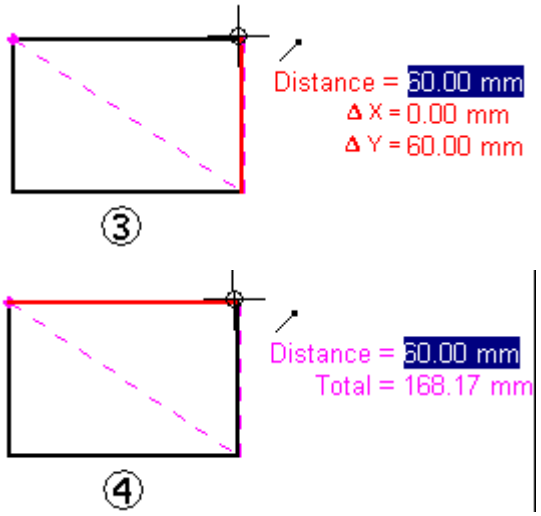

Measuring distances and angles in 3D

In the Part, Sheet Metal, and Assembly environments, the Measure Distance command measures linear distances. The first point you click establishes the origin of the measurement (1). After that, you can select any keypoint (2) to display the Measure Distance dialog box which displays the keypoint select type, the true distance, the apparent screen view distance, and the delta distance along each principal axis.

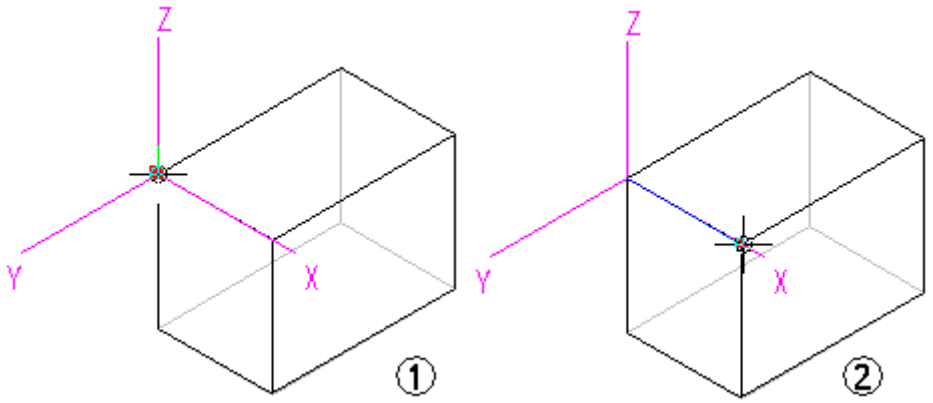

In the Part, Sheet Metal, and Assembly environments, the Measure Angle command measures angles. You can measure between any two faces or between any three points.

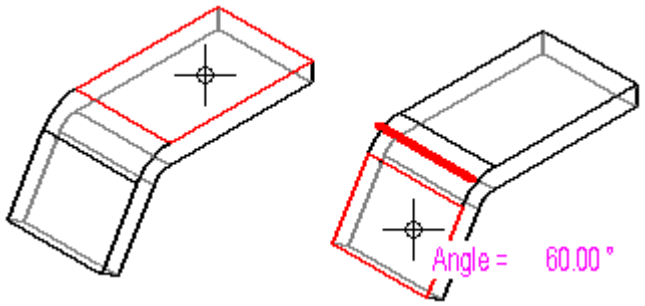

Measuring minimum distances

In the Part, Sheet Metal, and Assembly environments, you can use the Measure Minimum Distance command to measure the minimum distance between any two elements or keypoints. You can use the Select Type option on the Minimum Distance command bar to filter which type of elements you want to select. When working in the context of an assembly, you can also use the Activate Part option to activate the parts you want to measure.

Measuring normal distances

In the Part, Sheet Metal, and Assembly environments, the Measure Normal Distance command measures normal distances between a planar element or line and a keypoint. You can use the Element Types option on the Measure Normal Distance command bar to filter which type of elements you want to select. You can use the Key Point option to specify the type of keypoint you want to identify when measuring the distance. You can use the Coordinate System option to select a user-defined coordinate system to define one of the points. If you use a coordinate system, the returned values will be relative to the specified coordinate system. When working in the context of an assembly, you can also use the Activate Part option to activate the parts you want to measure.

Measuring areas

The Measure Area command, available only in the Draft environment and in 2D profiles and sketches, measures the area inside a closed boundary (1). You can also measure the cumulative area inside more than one closed boundary by holding the Shift key as you click elements (2). Each time you click, the area of the last element is displayed, along with the total area. Click another element without holding the Shift key to reset the command.

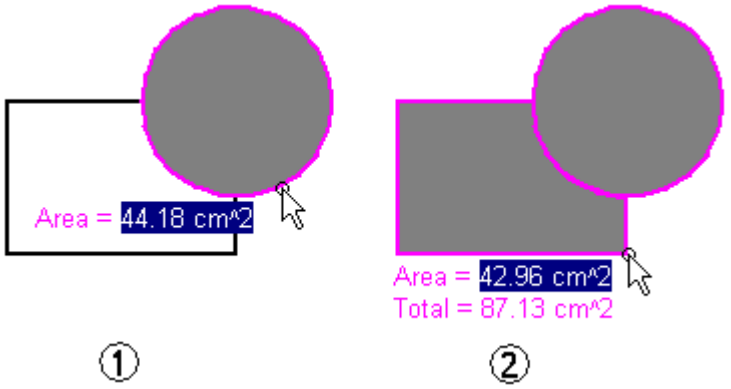

Measuring lengths

The Measure Total Length command measures the cumulative length of a select set of 2D geometry.

Measuring automatically

In addition to the individual distance, area, length, and angle commands, you can use the Smart Measure command in 2D and 3D environments to measure automatically based on what you select:

- Select a single 2D element or 3D object to measure its length or its angle or radius.
- Select two or more 2D elements or 3D objects to measure the distance or angle between them.

The Smart Measure command works like the Smart Dimension command, except that it does not place a dimension as a result.

Copying measurement values

You can copy the highlighted measurement value to the Clipboard by pressing Ctrl+C. You can then use the copied value as input for another command. For example, you can paste the copied value into the Line command bar to define the length of a line. Use the Tab key if you want to highlight a different value.

Measuring drawing view geometry

When you measure model geometry within a drawing view, or when you measure distances between model edges in two drawing views, you can select the Use Drawing View Scale check box on the command bar to specify that the measured value is displayed using the equivalent of the model distance.

Alternatively, you can apply a user-defined scale value by selecting it from the Scale list on the command bar.

Note

- You can show the scale of a drawing view using the General page (Drawing View Properties dialog box).
- User-defined scale values are defined in the Drawing View Scales section of the Custom.xml file, in the Solid Edge Program folder. See the Help topic, Add custom drawing view scales to Solid Edge.

Example: Measuring the length of a line

Even when you are in the middle of a task, you can measure distances with the Measure Distance command. For example, consider the following workflow.

1. Use the Line command to draw a line (1).
2. On the Inspect tab, click the Measure Distance command and measure a distance (2).

   Note

   You do not need to exit the Line command before measuring a distance.

3. To exit the Measure Distance command, right-click. The Line command is still active-you can pick up where you left off.
4. Continue using the Line command (3).

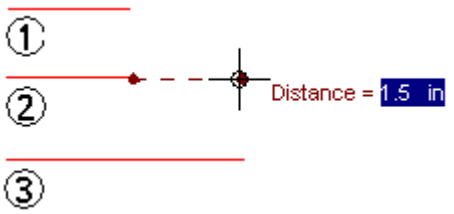

Lesson

8 *Dimensioning sketches*

Dimensioning commands are located in three locations. They are located in the Dimension group on the **Home**, **Sketching** and **PMI** tabs.

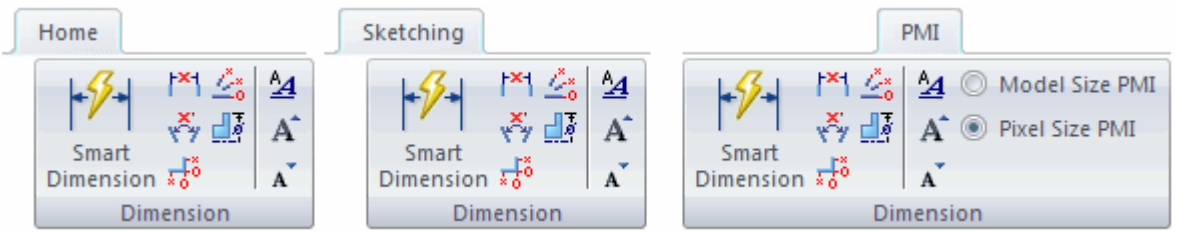

Locked dimensions

Sketch dimensions are placed as **driving**. A **driving** dimension is colored red. A driving dimension is also referred to as a **locked** dimension. A locked dimension cannot change unless it is edited directly. As sketch geometry is modified, a locked dimension does not change.

Change a dimension to **driven** (or unlocked) by selecting the dimension and then clicking the lock on the Dimension Value Edit QuickBar. A **driven** dimension is colored blue. A driven dimension value cannot be selected for editing. It must be changed to a locked dimension to change its value directly.

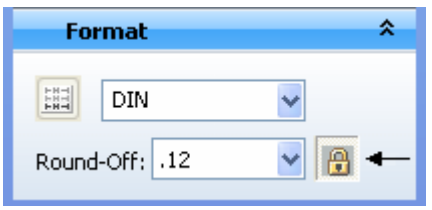

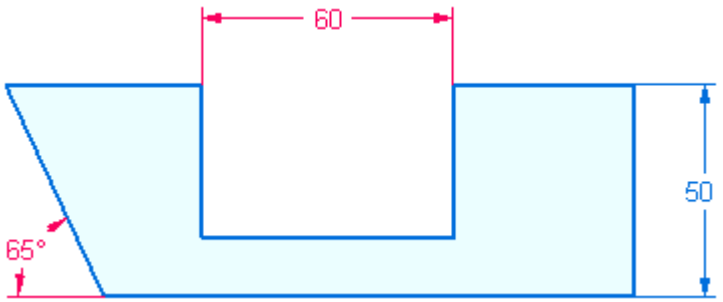

To change a dimension value of a locked dimension, click the dimension value and enter a new value.

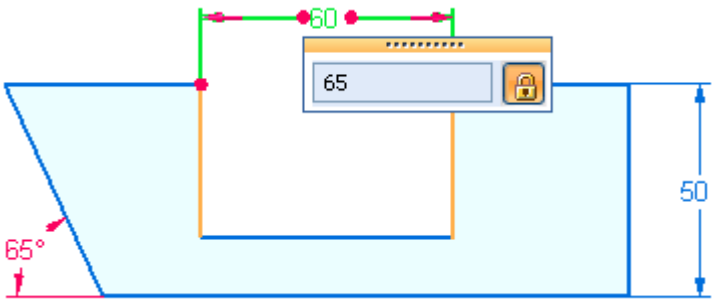

Dimension orientation

The orientation of a sketch dimension is controlled by the sketch plane origin. The sketch plane origin defines the horizontal/vertical direction.

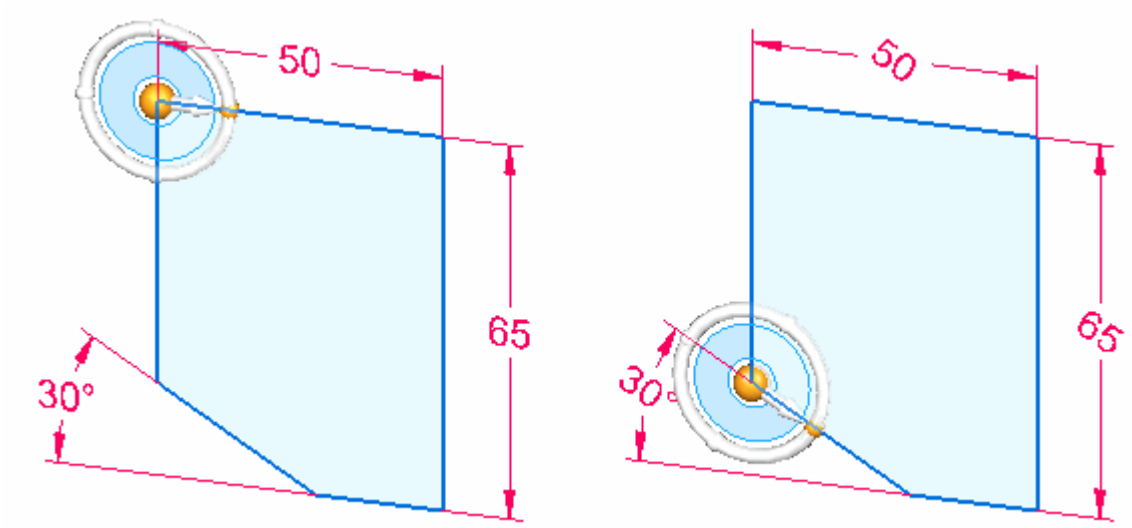

Choosing the **Sketch View** command orients the view to where the dimension text is horizontal.

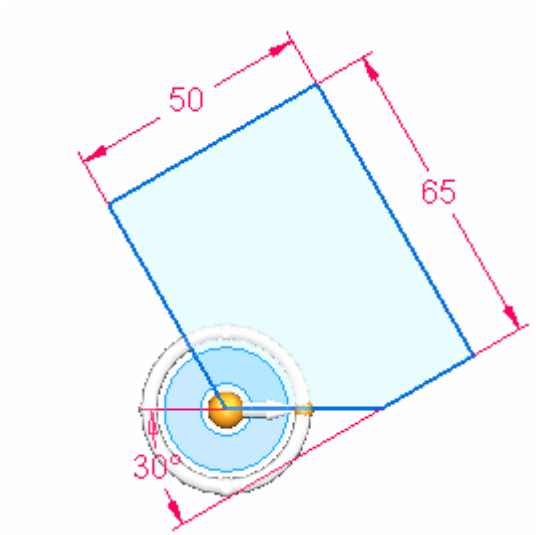

Dimension style

Modify the dimension style settings in the Style dialog box. The Style command is located on the View tab in the Style group.

Lesson

9 *Sketches in PathFinder*

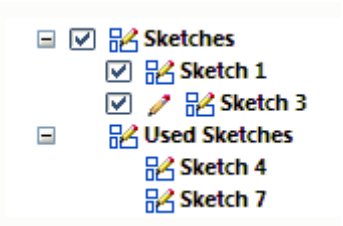

- In PathFinder, there are two collectors for sketches (**Sketches** and **Used Sketches**).
- Sketches are stored in a **Sketches** collector until they are consumed by body creation or deleted.
- The pencil symbol in front of a sketch denotes that its sketch plane is locked.
- Unconsumed sketches can be displayed or hidden with a check mark. All sketches or specific sketches can be hidden or shown.
- Sketch elements used to create a feature are removed from the **Sketches** collector and placed in the **Used Sketches** collector.
- Used sketches can be highlighted, deleted, renamed or restored.

Sketches context menu in PathFinder

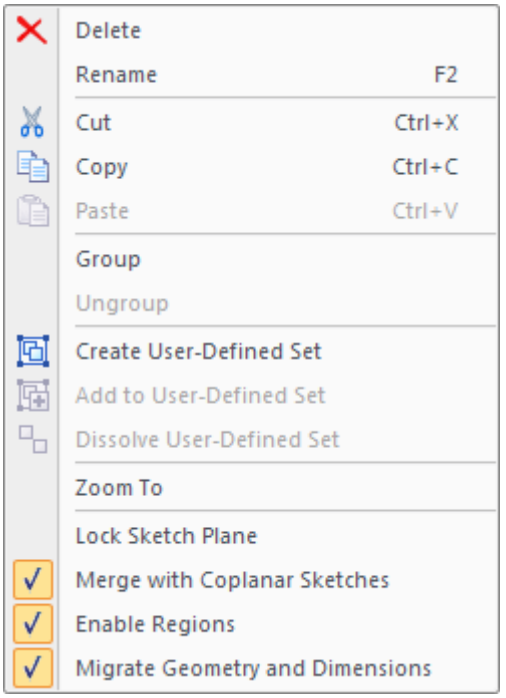

The sketches context menu includes options on how a sketch responds to creation of regions and feature creation. These options are on a per sketch basis.

Merge with Coplanar Sketches

- If a sketch exists on the locked sketch plane, then any new sketch geometry merges with the existing sketch.

Enable Regions

- Create regions as sketch geometry forms closed area(s).

Migrate Geometry and Dimensions

- Consume the sketch geometry used to create features and move into the geometry into the **Used Sketches** collector.
- Create the PMI dimensions on the body as the sketch geometry is used to create features.

Used Sketches context menu in PathFinder

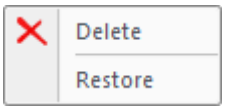

Right-click on a used sketch to bring up the context menu. The Restore command restores a consumed sketch to the **Sketches** collector. If a sketch plane exists

that is the same as the used sketch plane, the restored sketch will merge with the existing sketch.

Lesson

10 Sketch plane origin

reference planes

The origin of a reference plane is system defined. The horizontal direction and the origin are positioned at the center of the reference plane. To change the reference origin, use the **Reposition Origin** command to define the new origin and horizontal direction.

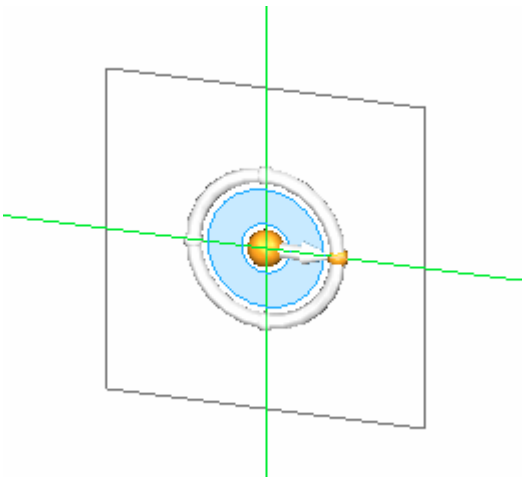

planar faces

The origin of a sketch on a planar face can be defined before locking the plane. The system determines a horizontal direction and origin. To change the system defined origin, cycle through the linear edges on the planar face. The edge displays green. Press (N) for next edge, (B) to go back to previous edge, (F) to flip the Y direction and (T) to toggle which end of the edge is used. Once the desired origin is displayed, click the lock to lock the sketch plane.

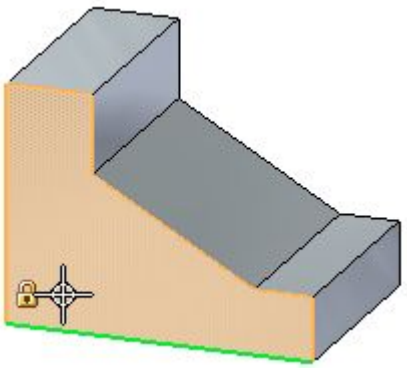

Reposition origin command

A sketch plane can only contain a single collection of sketch elements. However, there can be more than one sketch area per sketch plane. In the example, there are two sketch areas (1 and 2). Sketch area (1) horizontal/vertical directions are not the same as sketch area (2). The sketch plane origin can be repositioned to redefine the horizontal/vertical directions for a particular sketch area.

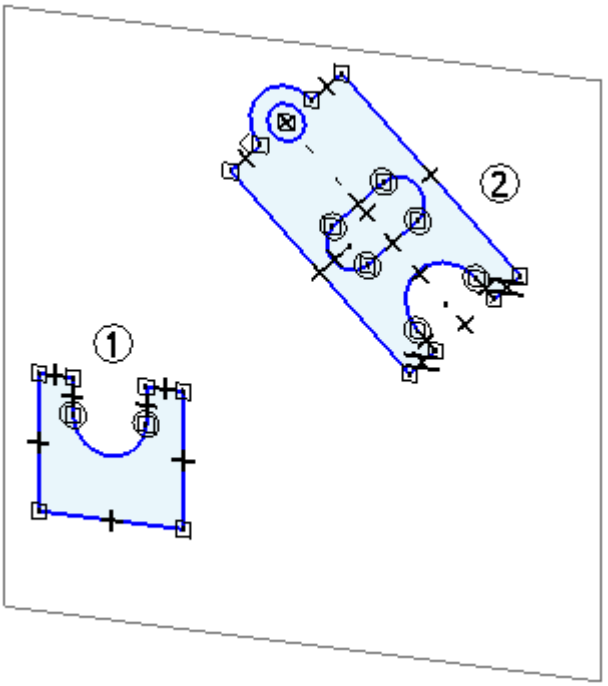

Zero Origin command

The Zero Origin command automatically resets the origin as follows:

- In Draft, the drawing grid origin is reset to the drawing sheet (0,0) coordinate.

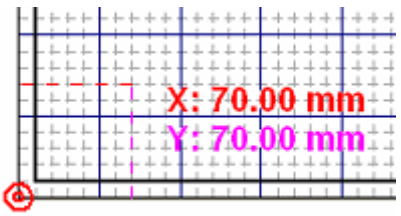

- In the synchronous environment, both the drawing grid and the sketch plane origin are reset to the (0,0,0) coordinate and orientation at the center of the currently locked sketch plane.

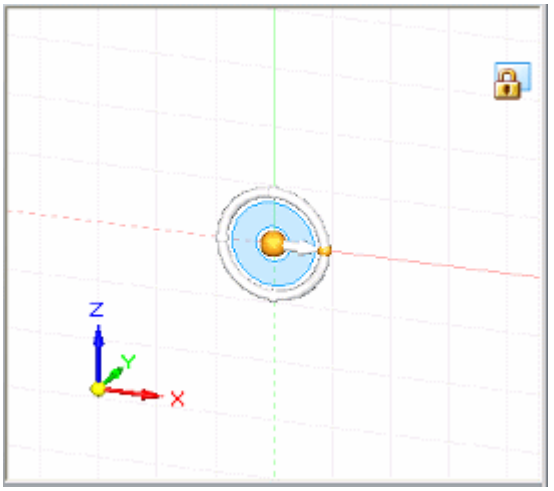

Note

This command is available only when you have locked a sketch plane.

Reposition origin workflow

Workflow based on using a planar face for a sketch plane.

1. Lock the sketch plane.
2. In the Draw group, choose the **Reposition Origin** command.

   The reposition origin handle displays at the sketch plane origin on the locked plane (1).

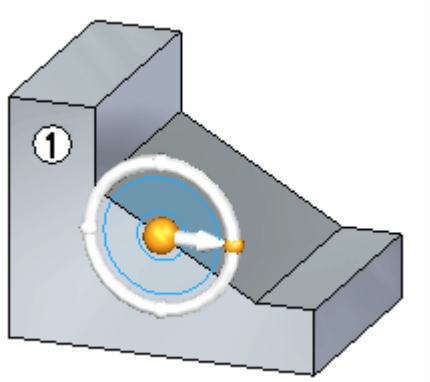

3. Click and drag the handle origin to a new vertex or edge.

   This defines the new origin.
4. Click and drag the torus to position the horizontal direction. Select a keypoint or type in angle to lock the direction.

Sketch view

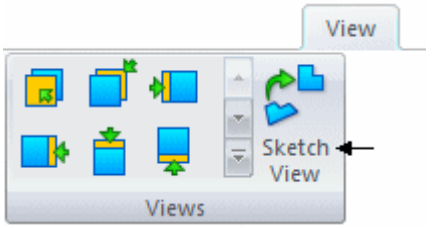

The sketch view command orients the active view normal to the horizontal/vertical direction of the locked sketch plane.

Lesson

11 Sketch consumption and dimension migration

In synchronous part and sheet metal environments, you typically draw 2D sketch geometry for the purpose of constructing features on a solid model. In the synchronous environment, when you use sketch elements to construct a feature, the sketch elements are consumed and the 2D dimensions you placed on the sketch migrate to the appropriate edges on the solid body, whenever possible.

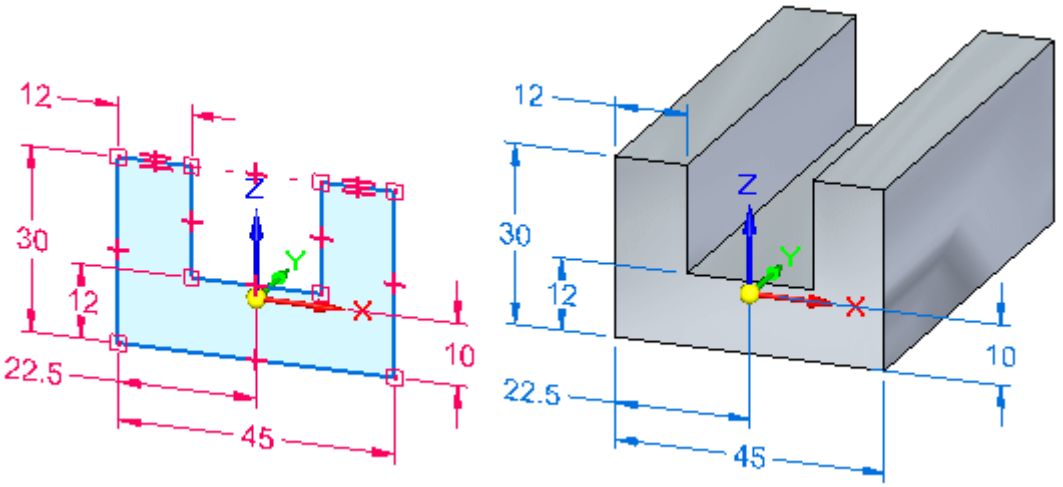

You can use the Migrate Geometry and Dimensions command command on the shortcut menu when a sketch is selected in PathFinder to control whether sketch elements are consumed and dimensions are migrated.

Automatic sketch consumption and dimension migration

By default, the Migrate Geometry and Dimensions command is set for a new document. The sketch elements are automatically consumed and 2D dimensions are automatically migrated when you use them to construct features. After you construct a feature, the 2D sketch geometry is moved to the Used Sketches collector in PathFinder, and the 2D dimensions are migrated as 3D PMI model dimensions.

You can disable the automatic consumption of sketch elements and migration of 2D dimensions on a sketch-by-sketch basis by clearing the Migrate Geometry and Dimensions command on the shortcut menu when a sketch is selected in PathFinder.

All model dimensions, whether migrated from sketches or added to edges on the 3D model directly, are PMI dimensions. PMI dimensions are displayed on PathFinder in the PMI collection, Dimensions sub-collection.

To learn more about creating and using PMI, see the Help topic, PMI dimensions and annotations.

Partially migrated sketches and dimensions

In many cases, only some of the sketch elements on a single sketch are used to construct a feature. If this is the case, only the selected sketch elements and the associated 2D dimensions are consumed and migrated.

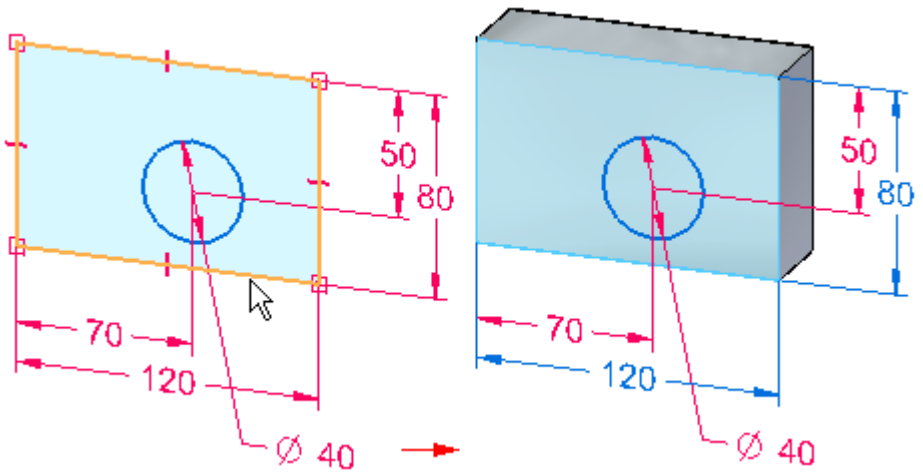

During this process, dimensions and constraints may be connected to both body edges and to remaining sketch geometry. If the sketch contains stacked dimensions, then some dimensions in the stack may migrate individually. Other dimensions, such as coordinate dimensions, do not migrate until all of the 2D geometry they are attached to has been used to construct a feature.

As you continue to construct features using the remaining sketch elements, sketch elements are consumed and dimensions are migrated.

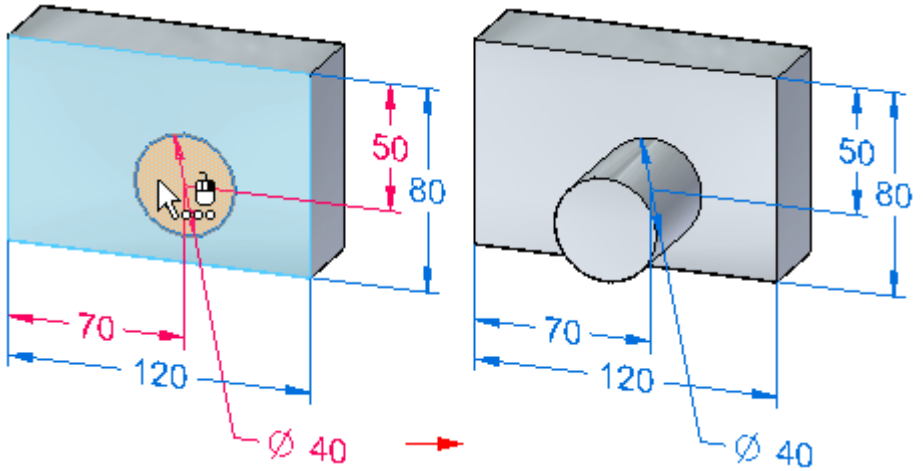

Dimension locking status after migration

2D dimensions are locked by default. When they migrate to the 3D model, they remain locked.

Note

Dimension colors are determined by settings on the Colors page of the Options dialog box.

Dimension variable and formula migration

Sketch dimensions that use variables retain the variables after migration to PMI dimensions. If a sketch dimension is driven by a formula, the formula is maintained when the dimension is migrated to a PMI dimension. The PMI dimension is still driven by the formula, but must be driving for the formula to solve properly.

Working with combinable sketches

You can use the Merge Coplanar Sketches command on the shortcut menu to control whether a sketch is combined with another coplanar sketch in a synchronous part or assembly.

Although this command is available in synchronous part, sheet metal, and assembly documents, the merge property is most useful when working with assembly sketches, and it also plays a role when converting traditional parts and assemblies into synchronous documents.

When you set the Merge Coplanar Sketches option for a sketch, the following rules and conditions apply:

- New sketch elements that are drawn coplanar to the sketch in free space are added to the existing sketch. To create the new coplanar sketch elements as a separate sketch, you can select the existing sketch and clear the Merge with Coplanar Sketches command before you draw the new, coplanar sketch elements.
- The sketch will combine with another sketch if the two sketches become coplanar during a move operation.
- In part and sheet metal documents, sketch regions are automatically enabled for a combinable sketch. When sketch regions are enabled, you can use the Select tool to construct features using the sketch. You can clear the Enable Sketch Regions command on the shortcut menu to disable sketch regions.
- In part and sheet metal documents, sketch consumption is automatically enabled for the combinable sketch. When sketch consumption is enabled, sketch elements are consumed when you construct features from the sketch. You can clear the Migrate Geometry and Dimensions command on the shortcut menu to disable sketch consumption.

Unique symbols are used in PathFinder to indicate whether a sketch is a combinable sketch, noncombinable sketch, or the active sketch.

Legend

Combinable sketch

	Noncombinable sketch
	Active sketch (combinable active sketch shown)

Assembly sketches

A noncombinable sketch is most useful when creating layout sketches in an assembly. Noncombinable sketches make it possible to draw multiple sketches which are coplanar. This can be useful if you want to create separate, coplanar sketches that represent individual parts or subassemblies for a new assembly. Noncombinable sketches makes it possible to show, hide, or move a set of sketch elements easily.

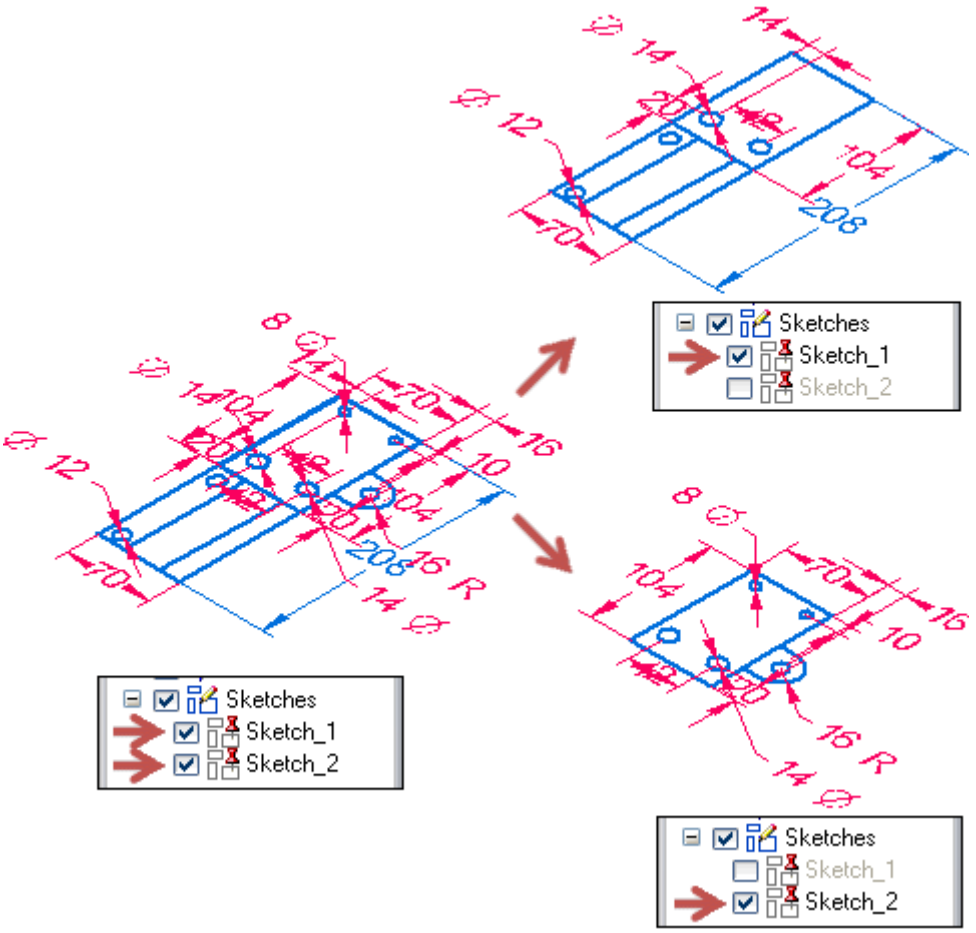

For more information, see HELP topic **Drawing sketches in assemblies**.

Lesson

12 Moving sketches

Sketches can be moved/copied in 2D or 3D. Sketches can be deleted or cut for pasting in 2D or 3D. This section covers three methods available for manipulating sketch geometry.

- Manipulating sketch elements in 2D
- Moving and copying sketch elements in 3D
- Copy, cut and paste sketch elements

Manipulating sketch elements in 2D

Planar sketch elements can be moved or copied with the 2D move command found on the **Sketching** tab, in the **Draw** group.

2D sketch element manipulation is confined to the selected sketch element's plane. If sketch elements in the select set are on different sketch planes, an error box appears when choosing any sketch manipulation command.

Error message: Selected sketch geometry must lie in the same plane.

Workflow for moving or copying a sketch

1. Select sketch elements to copy or move in the part window individually or with a select box. If the sketch elements form a region, disable regions for the sketch before using the select box.
2. Choose the Move command .
3. Select point (on any of the selected sketch elements) to move or copy from. You can use keypoints to define the move or copy from point.
4. Notice that there are options available in the Move (1) command bar.

If you want to move a copy, select the **copy** option (2) . You can also enter the **X** (4), **Y** (5) distances to move or copy to. You can also enter a step distance **Step** field (3).

5. Click a 'to' point to move or copy to. If you are moving, then the command ends once a to point is clicked. The select set is still active. If you are copying, each click places a copy. A right-click during a copy will end the command with the select set still active.

6. Press **Esc** to clear select set.

2D sketch manipulation commands

Two lists are available that contain 2D commands for manipulating sketch geometry.

Manipulation commands are move, rotate, mirror, scale and stretch.

These commands each have a set of options in command bar. Each command also can manipulate a copy of the selected sketch elements.

Moving and copying sketch elements in 3D

Sketch elements can be moved/copied in 3D. The select set of sketch elements are **not** required to lie all on the same plane. The 3D move requires the use of the graphic handle. See the **Graphic handle** section in the **Moving and rotating faces** course to learn how to use the graphic handle.

The selected sketch elements can be:

- moved or copied in the sketch plane
- moved or copied to a parallel plane
- rotated or copy rotated to another plane

Workflow for a synchronous 3D move or rotate of sketch elements

1. Select sketch geometry.

   Selection methods

   - Select entire sketch(s) in PathFinder
   - Select sketch elements individually in the part window.
   - Select sketch elements in the part window with a select box

     Note

     If the sketch elements form a region, disable regions before using the select box.

     Note

     Select set can contain sketch elements on different planes.

2. If entire synchronous sketches are selected in PathFinder, on the **Move** command in QuickBar, click the drop list arrow and choose the **Move** command.

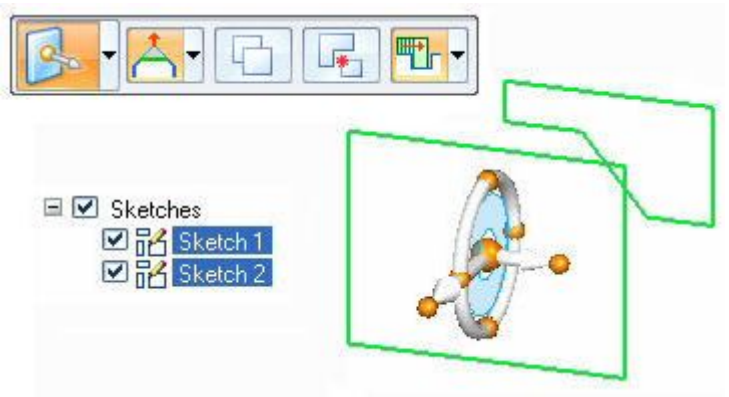

   Use the secondary axis or handle plane to move sketch elements in a plane.

   To rotate, drag the handle origin to an edge that will be the axis of rotation. Then click the torus to define the angle of rotation.

   Click the **copy** option in QuickBar to move a copy of the selected sketch elements.

3. If sketch elements are selected in the part window, on the **Modify** command QuickBar, choose the Move command from the drop list.

   Use the graphic handle as described in the previous step to move or rotate the selected sketch elements.

4. After sketches are manipulated and regions were disabled, you will need to remember to enable regions in order to create features from the sketches.

Copy, cut, and paste sketch elements

Sketch elements can be manipulated using the Microsoft clipboard behavior.

- **Ctrl+C** copies the selected sketch elements to the clipboard.
- **Ctrl+X** deletes the selected sketch elements from the model and adds them to the clipboard.
- **Ctrl+V** pastes the selected sketch elements in the model.

Paste behavior

A **paste** operation places the sketch elements (clipboard) onto the locked sketch plane at the location clicked. At this point, the paste elements are attached to the cursor and each click places another copy paste elements on the locked plane.

If there is no locked sketch plane, the sketch elements are placed onto the plane highlighted under the cursor at the location clicked. At this point, the paste elements are attached to the cursor and each click places another copy of the paste elements on the locked plane.

To select another plane to paste to, end the paste operation with the **Esc** key. **Ctrl+V** starts the paste operation again and then select the new plane.

Lesson

13 Projecting elements onto a sketch plane

Face edges, sketch elements and reference plane edges can be projected onto a locked sketch plane.

- The **Project to Sketch** command is located on the Sketching tab in the Draw group.
- A locked plane is required before the **Project to Sketch** command can be chosen.
- Use the **Project to Sketch** command bar to refine the selection of elements to project and to set the project options.

Project to sketch command

Copies part edges or sketch elements onto the current sketch plane. For example, you can select a part edge (1) to project onto the current sketch plane (2). The projected edge (3) can then be used in the current sketch.

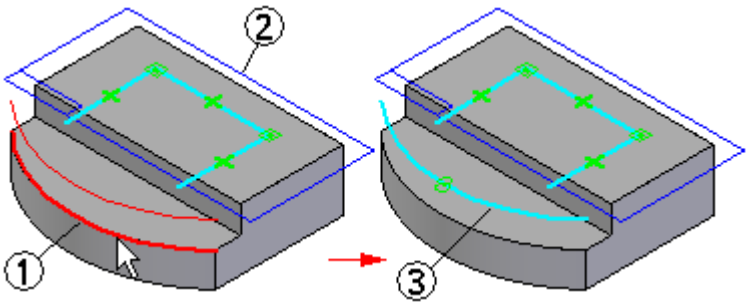

You can project elements associatively or non-associatively.

Projected elements and associativity

Special relationship symbols are used to indicate that an element is associatively linked to another element. The symbols indicate whether the element is associatively linked to an element in the same document (local) or another document (peer-to-peer).

Link (local)	
Link (peer-to-peer)	

A projected element from the current part is always projected associatively. A projected element from another document can be associative or non-associative.

You can break the associative link on projected elements by deleting the link relationship symbols.

You can trim and modify associative or non-associatively projected elements, and incorporate associatively projected elements into a sketch that contains newly created non-associative elements.

> **Note**
>
> When you use sketch elements to construct a feature in a part document, the sketch elements are transferred to the Used Sketches collection in PathFinder. For projected elements, the associative link between the parent element and the projected element is discarded.

You can also add relationships or dimensions to associatively projected elements, but if the relationship or dimension conflicts with the associative relationship to the parent element, a warning message is displayed.

You can project edges between part documents, but it is not associative. It is a copy only.

Projecting elements from other documents

When working in an assembly, you can use the Project to Sketch command to project part elements, such as part edges, into an assembly sketch. You cannot project elements between two parts in an assembly.

Lesson

14 *Sketching instructional activities*

Part1

Activity covers plane locking, drawing sketch elements, placing dimensions, applying geometric relationships, showing relationship handles, reposition sketch plane origin and controlling sketch display.

Turn to **Appendix C** for the activity.

Part 2

Activity covers drawing a sketch on a reference plane, including edges from part faces, sketch associativity to part model edges and the sketch view command.

Turn to **Appendix D** for the activity.

Part 3

Activity covers drawing a sketch on a face, copying the sketch to another face, rotating and moving the copied sketch.

Turn to **Appendix E** for the activity.

Lesson

15 *Sketch projects*

Turn to **Appendices F**, **G**, **H**and **I** for drawings.

A Activity: Draw a simple sketch

Open a part file

- Start Solid Edge ST3.
- Click the **Application** button ® **New** ® **ISO Part**.

Choose a sketch command

- On the Sketching tab, in the Draw group, choose the **Line** command .
- Position the cursor as shown to place first point of line.

Draw the sketch shape with line segments

- The line command requires two points to create a line. Click to place the first point of a line.

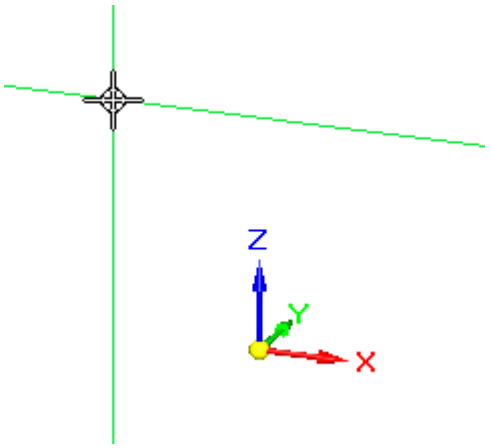

Notice the alignment lines connected to the cursor. These lines assist you in aligning sketch geometry.

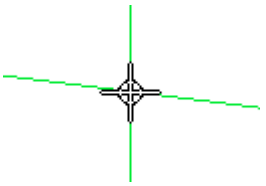

When a line alignment is horizontal, you will see the horizontal indicator.

When a line alignment is vertical, you will see the vertical indicator.

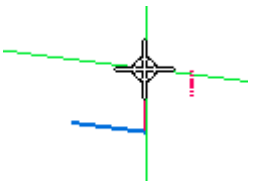

When you are at the endpoint of another line you will see the endpoint indicator.

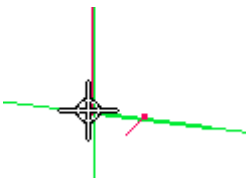

- Draw eight lines to form the basic shape shown. Be sure to make all of the lines horizontal or vertical, but do not worry about the line lengths at this time.

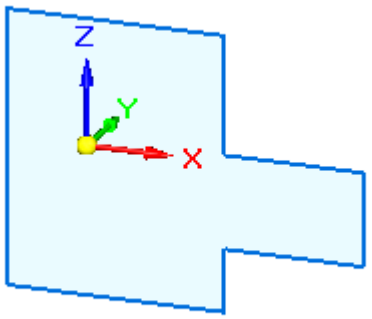

- In PathFinder, click the check box for **Base** to turn off the display of coordinate systems.

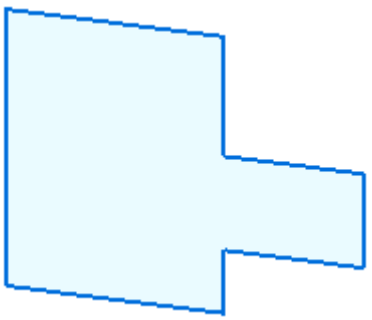

Add a circle to the sketch

- Place a circle as shown.

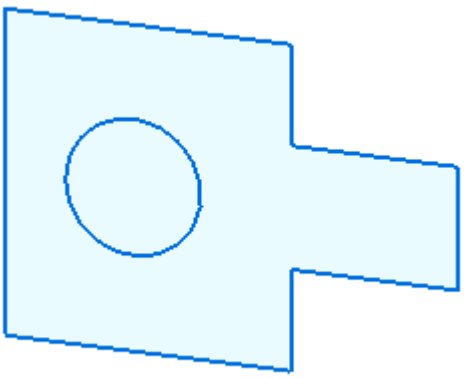

Place sketch geometry relationships

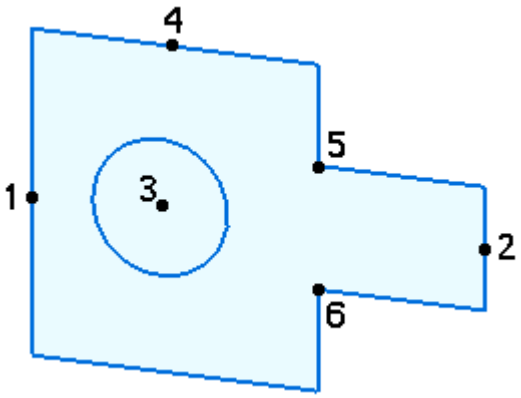

- In the Relate group, choose the Horizontal/Vertical command .
- Align midpoint **2** with midpoint **1**. Make sure you get the midpoint indicator before clicking.
- Align circle center **3** with midpoint **1**. Make sure you get the center point indicator before clicking.
- Align circle center **3** with midpoint **4**. Make sure you get the center point indicator before clicking.
- Align point **5** with point **6**.

Place sketch dimensions

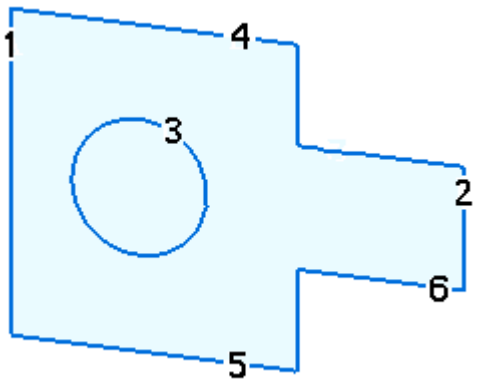

Numbers denote the select location for dimensioning the sketch elements.

- In the Dimension group, choose the **Distance Between** command . Dimension the distance between line **1** and line **2** by clicking line **1** and then line **2**.

- In the dimension value edit box, type 90.

- In the Dimension group, choose the **Smart Dimension** command .

  Dimension the length of line **1** by clicking at **1**.

- In the dimension value edit box, type 70.

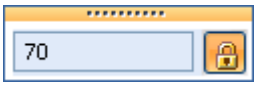

- Dimension the length of line **4** by clicking at **4**.

  In the dimension value edit box, type 50.

- Dimension the circle by clicking at **3**.

  In the dimension value edit box, type 25.

- Use the Distance Between command to dimension the distance between line **5** and line **6** by clicking line **5** and then line **6**.

- In the dimension value edit box, type 15.

Sketch complete

The sketch is complete. Turn on the relationships handle display to see the sketch relationships.

- On the Sketching tab, in the Relate group, choose the **Relationship Handles** command.

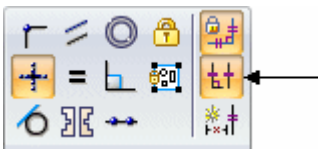

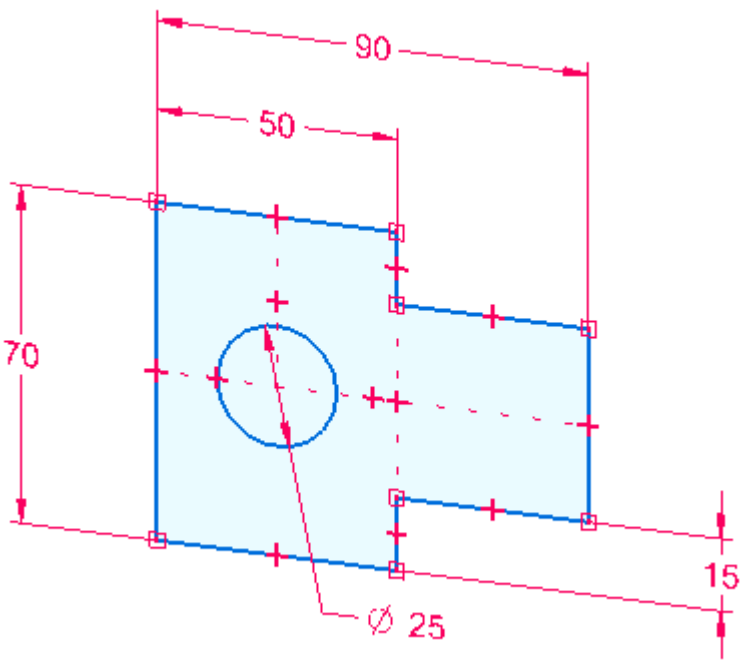

- Turn off the relationship handles.

Summary

In this activity you learned how to create a sketch. Dimensional and geometric relationships can be added at any time during the sketch creation. Sketches are required to create extruded or revolved features in Solid Edge.

Practice

- Try changing dimensions and adding sketch geometry for practice. Otherwise, close the file and do not save.

B Activity: Create regions

This activity guides you through the process of drawing a sketch to observe when regions are formed. You will also learn how to select regions.

Open a part file

- Start Solid Edge.
- Click the **Application** button ® **New** ® **ISO Part**.

Draw a rectangle

- Select the Line command .
- Draw a rectangle. Notice that as soon as the last line connects to the first line, a region is formed. (1) denotes the first point.

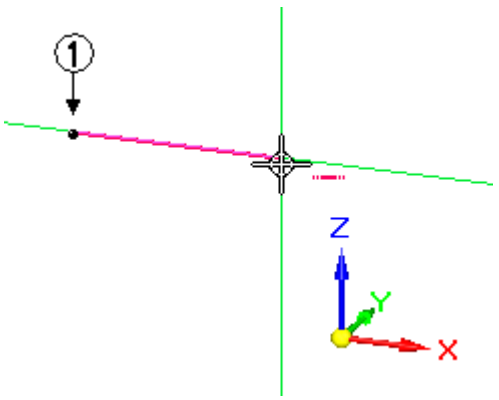

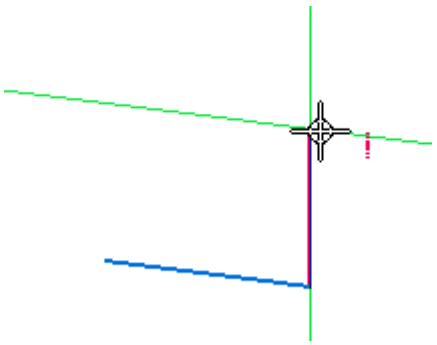

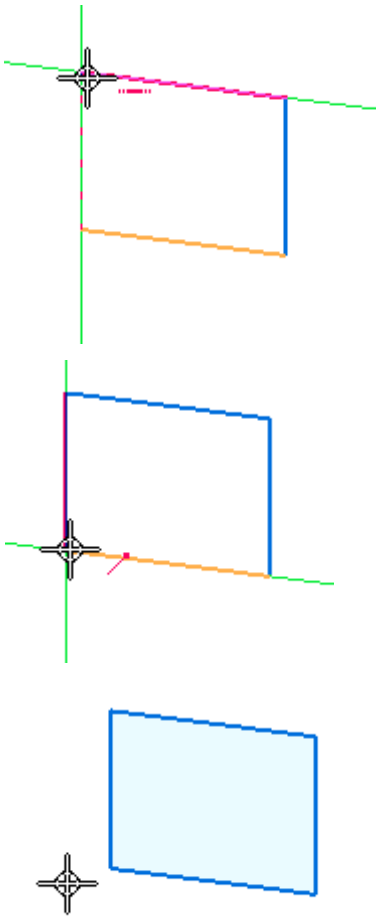

Select the region

- Click the Select tool .
- Move cursor over rectangle and notice the color change. Closed sketches (regions) and faces highlight as the cursor moves over them.

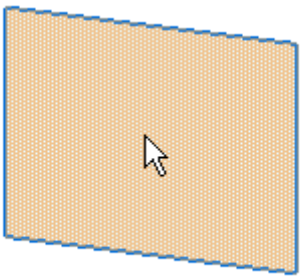

- Select the region and notice the color change. The region can be extruded or revolved. This will be covered in the **Base Feature Creation** course. Press the **Esc** key to end the select command.

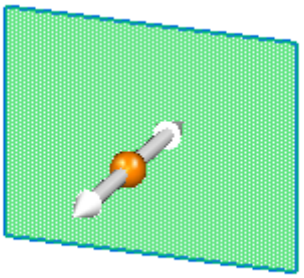

Create nested regions

- Select the Rectangle command .
- Draw two rectangles that overlap as shown.

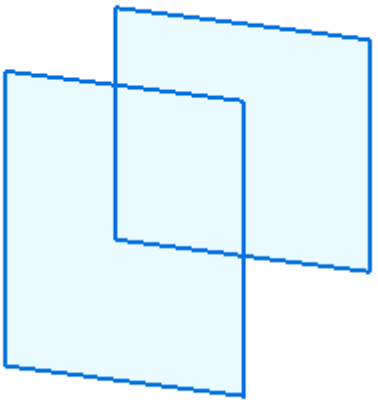

Select multiple regions

The two overlapping rectangles has formed three regions.

- Move the cursor over the overlapping rectangles and notice the regions formed.

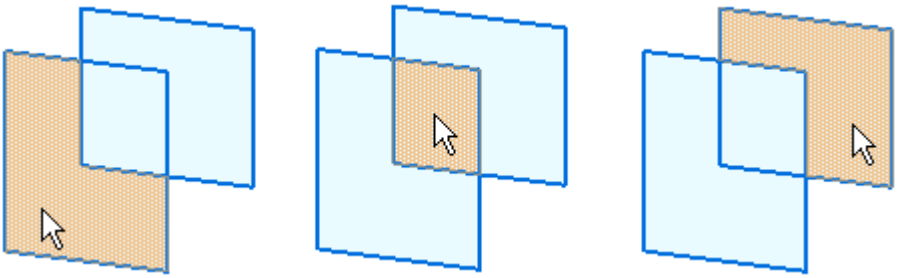

- Select each region and notice that the previously selected region is deselected.

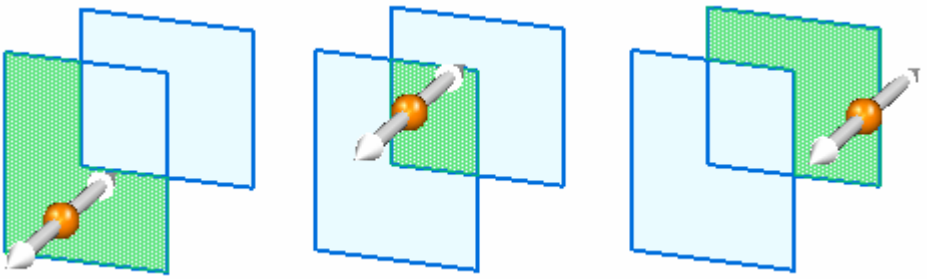

- To select multiple regions, select a region and then press the **spacebar**.

Note

The **spacebar** sets the select mode to add/remove . If you select an element already selected, it is deselected. If you select an element not already selected, it is selected.

- Create the following select sets. Press **Esc** after each select set is created.

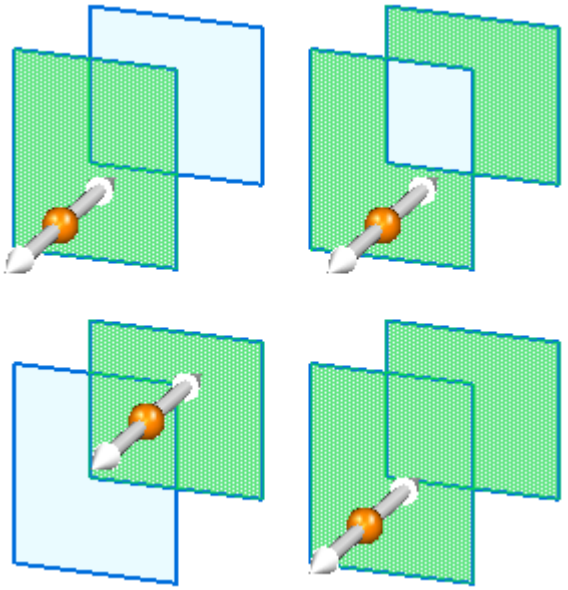

Summary

In this activity you learned how to create and select regions. Regions are required to create synchronous features in Solid Edge.

Practice

- Try creating other regions for practice. Otherwise, close the file and do not save.

C Activity: Sketching (Part 1)

Open a part file

- Start Solid Edge.
- Click the **Application** button ® **Open**.
- In the **Open File** dialog box, set the **Look in:** field to the folder where the training files are located.
- Click *sketch_A* and then click **Open**.

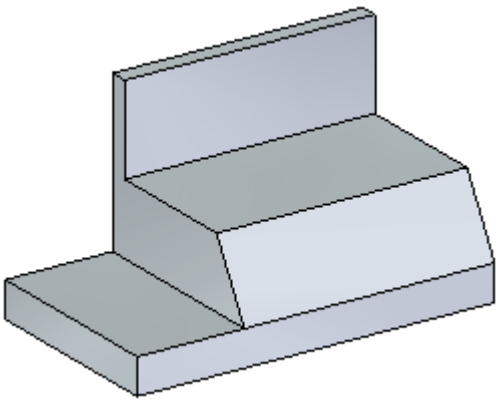

Start the sketching process

- Choose the **Line** command.

- Define the sketch plane. Pause the cursor over the angled sketch plane. Press the **N** key until the green edge highlights as shown. This defines the horizontal direction for the sketch plane.

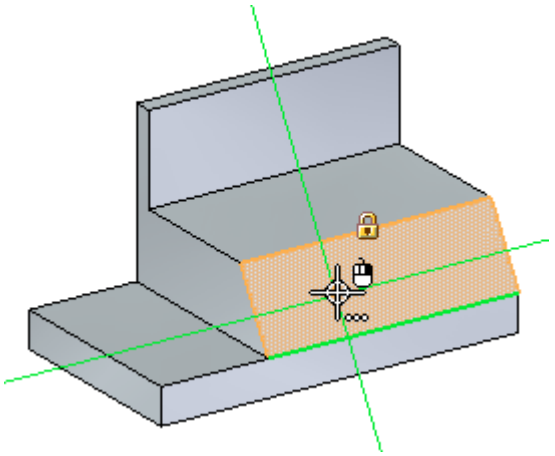

Note

While the plane is highlighted, you can begin sketching and you will be locked to the plane. If you move the cursor away from the plane before placing any geometry, you will have to highlight the plane again. You could also click the lock on the highlighted plane to lock the plane. If you manually lock the plane, it remains locked until you unlock it.

Draw sketch geometry

- Draw a slot shaped sketch consisting of two lines and two arcs. While the angled plane is highlighted, click to place the first point of the line.

- For the second point of the line, make sure the horizontal indicator displays and then click.

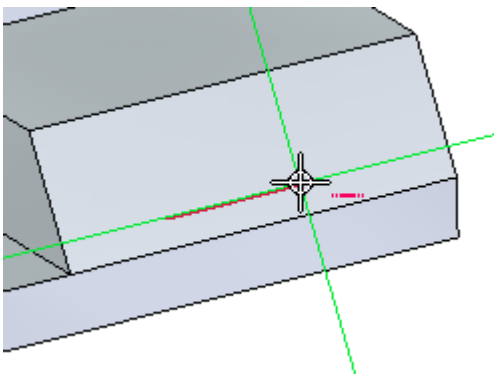

- Place a tangent arc. Press the **A** key to enter the place arc command.

  Position the intent zone as shown.

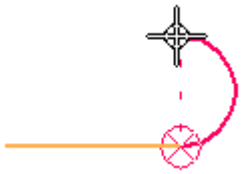

  Place the arc end point vertical from arc start point.

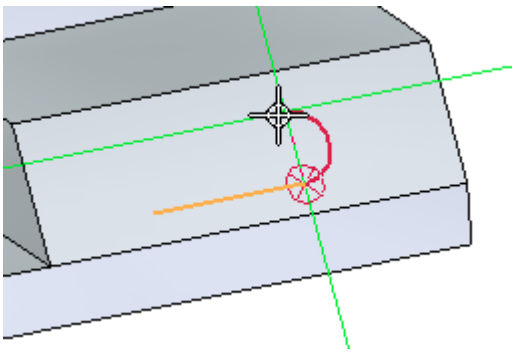

- Place the second line as shown. Make sure you get the tangent alignment symbol and the vertical alignment from the first point of the start line.

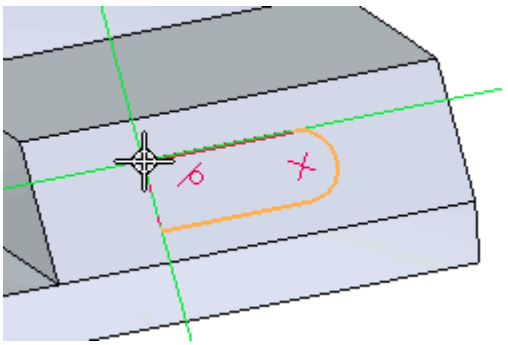

- Place the second tangent arc. Press **A** and then end the arc at the endpoint of the first line.

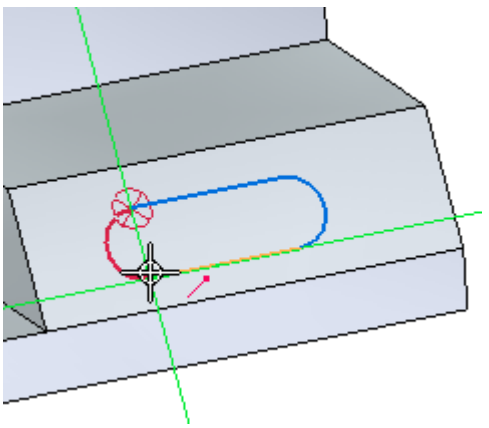

Regions formed

Notice the face changed to a blue color. This denotes the presence of regions. The sketch drawn on the face created two regions.

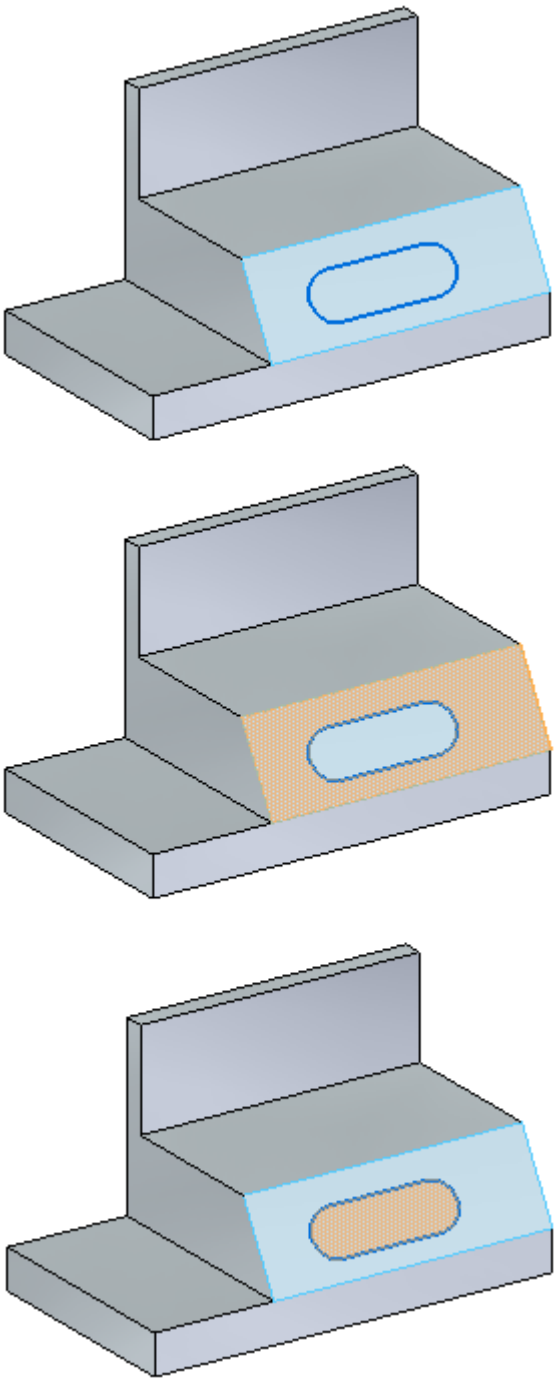

Place geometric relationships

Center the slot sketch on the face using geometric relationships.

- Turn on the display of relationship handles. On the **Sketching** tab in the **Relate** group, choose the **Relationship Handles** command.

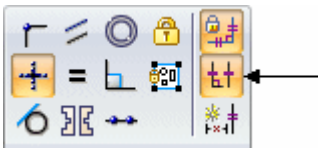

The handles show that the lines are horizontal and the arcs are tangent connected to the endpoints of the lines.

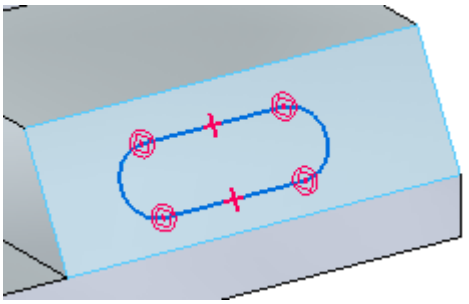

- Align the midpoint of one line to the midpoint of a face edge. In the **Relate** group, choose the **Horizontal/Vertical** command. Click the midpoint of the line and then click the midpoint of the face edge.

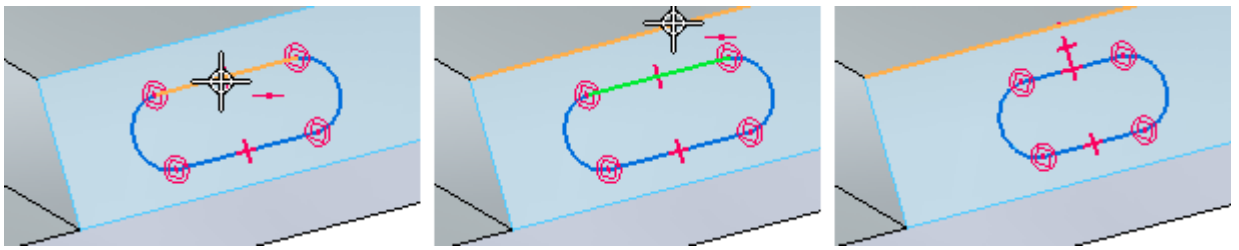

- Align the center of the arc to the midpoint of a face edge. Using the horizontal/vertical command, click the arc center and then the midpoint of the face edge. The slot is centered on the face.

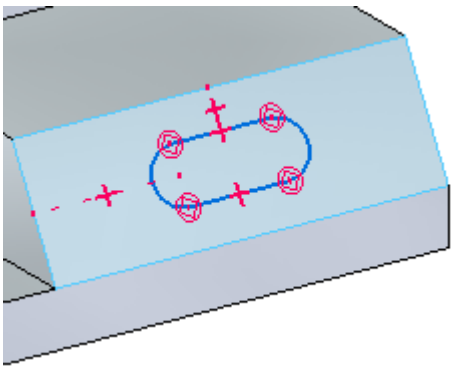

Add dimensions

Dimension the slot radius and distance between centers.

- Choose the **Smart Dimension** command. Click on one of the arcs and type **5** in the Dimension Value Edit dialog box.

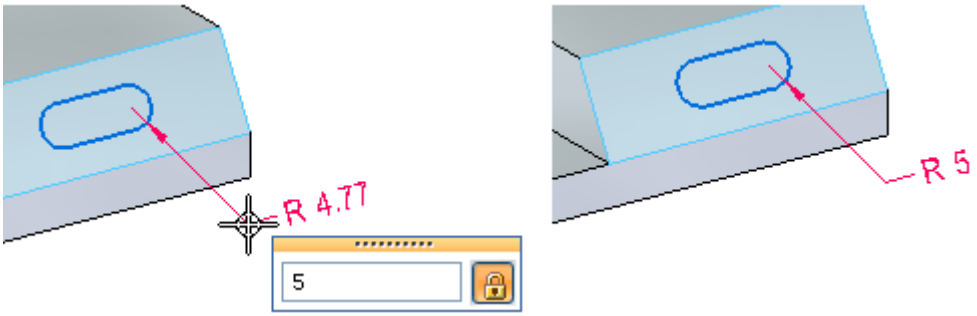

- Choose the **Distance Between** command. Select the center of each arc and type **30** in the edit box.

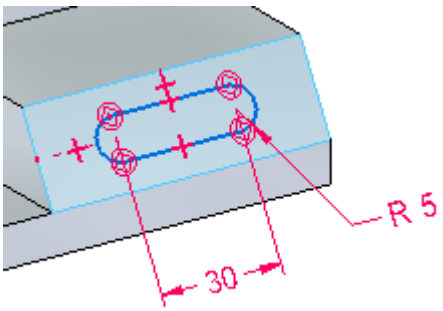

Turn off sketch

- If the sketch plane was manually locked, in PathFinder, right-click the on the sketch. On the short-cut menu, click **Lock Sketch Plane**.

- Click the check box to turn off the sketch display.

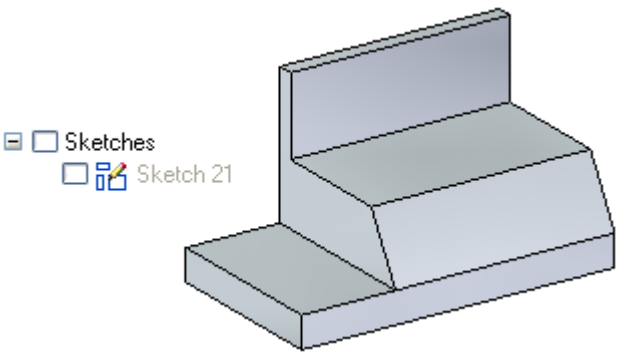

- Activity is complete. Exit the file and do not save.

Summary

In this activity you learned how to create a sketch on a part face. You learned how to apply relationships and dimensions to a sketch.

D Activity: Sketching (Part 2)

Open a part file

- Start Solid Edge.
- Click the **Application** button ® **Open**.
- In the **Open File** dialog box, set the **Look in:** field to the folder where the training files are located.
- Click *sketch_B* and then click **Open**.

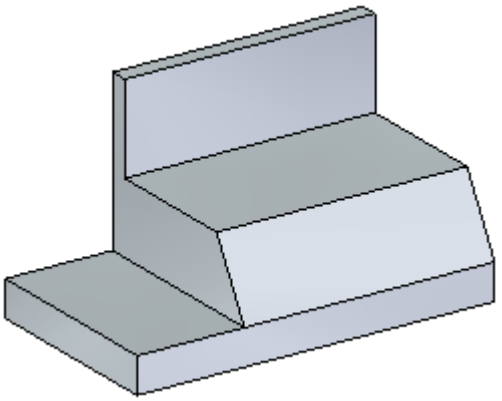

Create a sketch plane

- On the **Home** tab, in the **Planes** group, choose the **Coincident Plane** command.

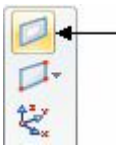

- Select the part face shown.

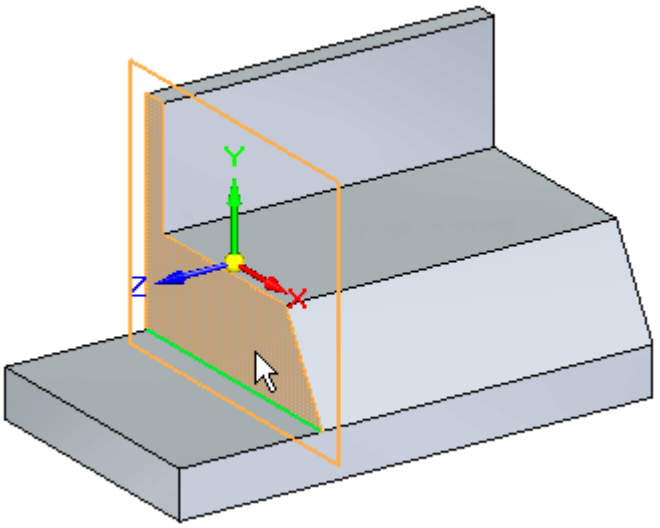

- Click the primary axis on the graphic move handle.

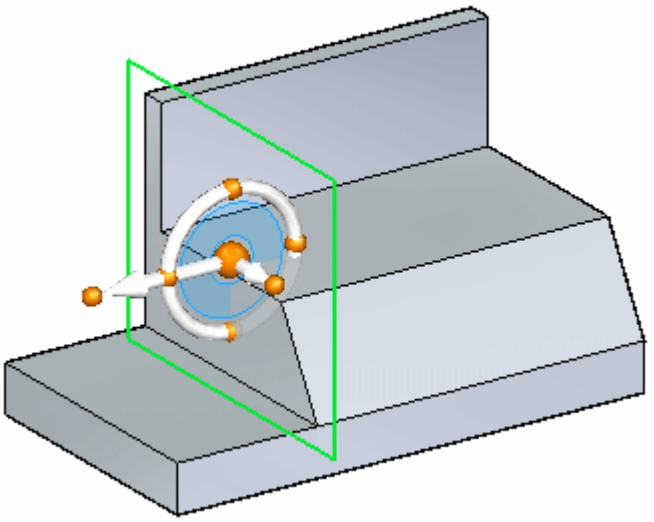

- In the distance edit box, type **20**.

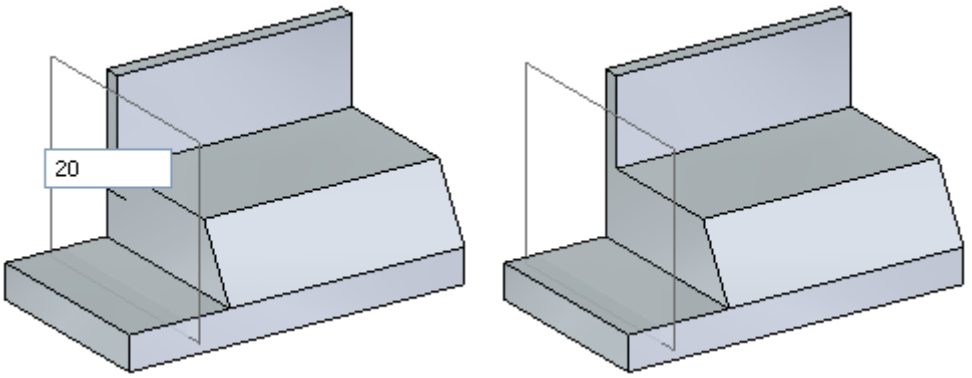

Start the sketching process

- You will use edges of the part in the sketch. On the Sketching tab, in the Draw group, choose the **Project to Sketch** command. The command requires a locked plane.

- Lock the sketch plane. Pause over the sketch plane created earlier and then click the lock.

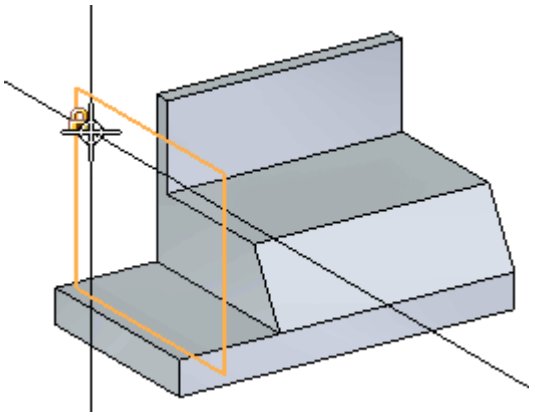

- Select the edges shown.

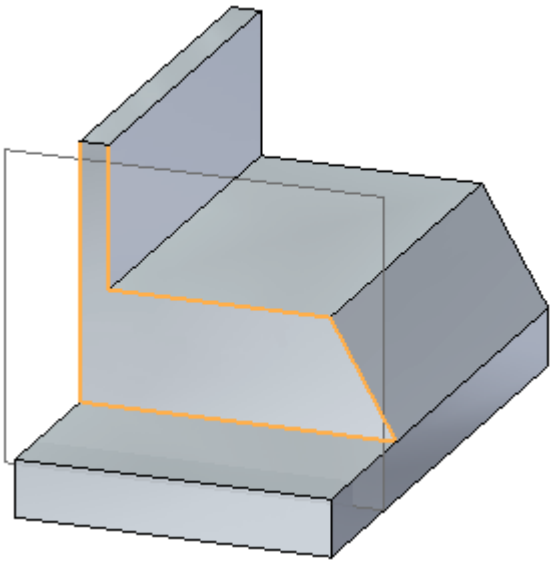

- Notice how these edges are projected to the locked sketch plane.

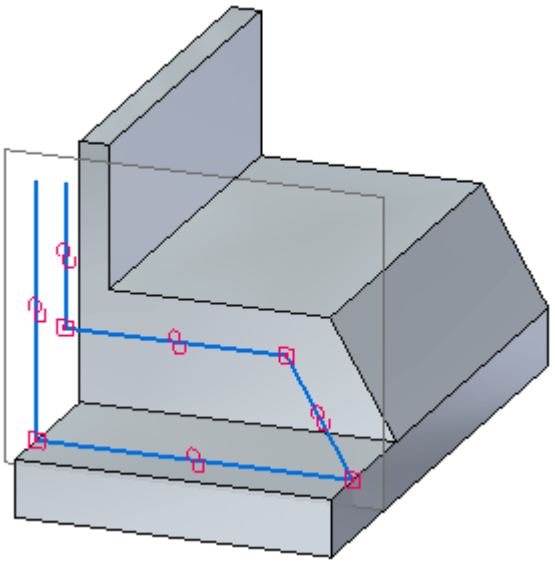

Observe sketch associativity

- Display PMI dimensions. In PathFinder, click the Dimensions check box.

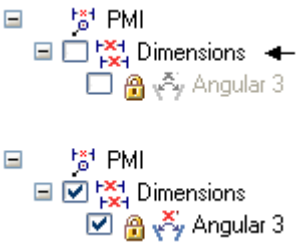

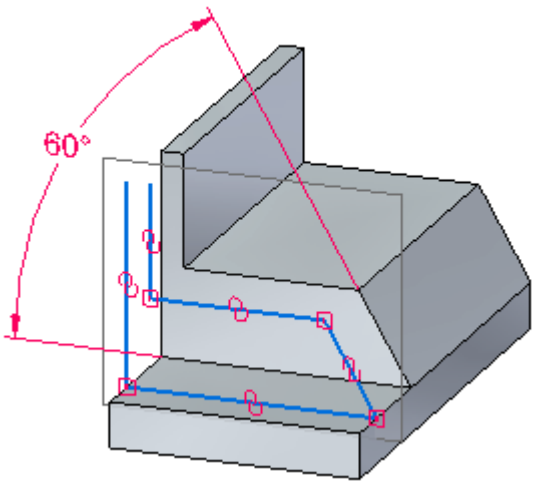

- Click the **60°** value on the dimension.

- Change the dimension (**45°-75°**) and notice how the edge that was projected to the sketch plane follows the angle of the face.

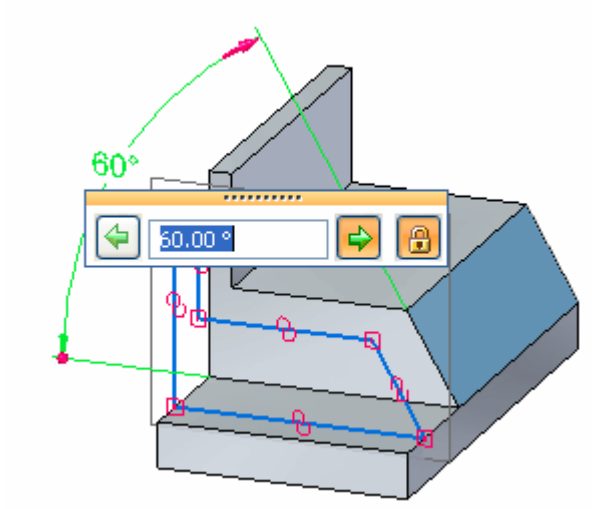

- Set dimension to **60°** and turn off the PMI dimension display.

Draw sketch geometry

Add and modify sketch geometry.

- Orient the sketch plane normal to the view. On the View tab, in the Views group, choose the **Sketch View** command.

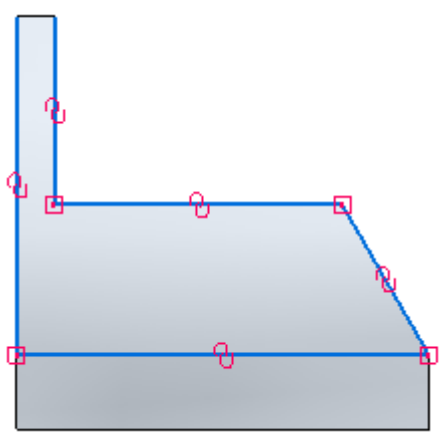

- Draw the sketch geometry as shown. Segment lengths and location are not important.

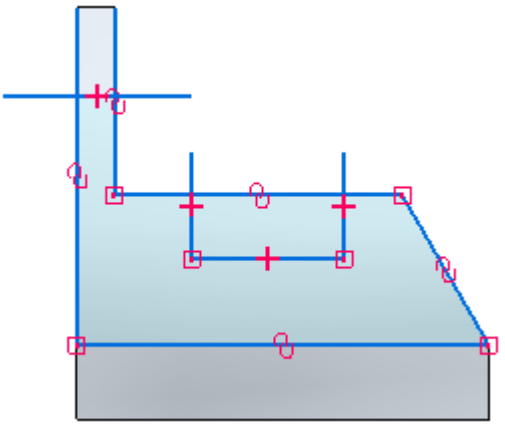

- Trim line segments. In the Draw group, choose the **Trim** command .
- Click and drag the cursor over the line segments shown.

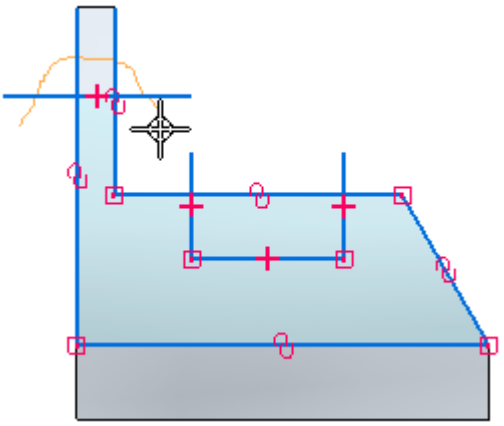

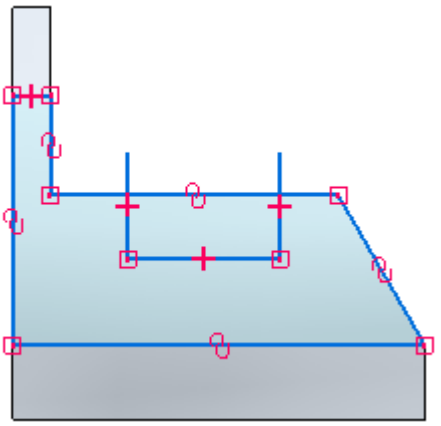

- Click and drag the cursor over the three line segments shown.

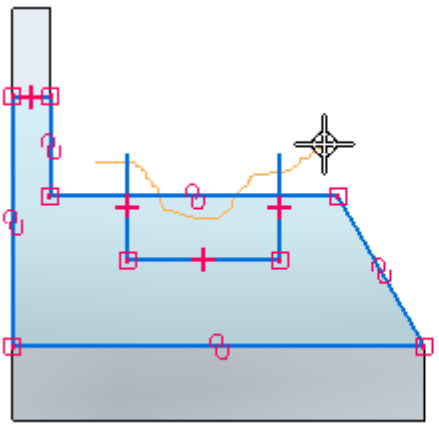

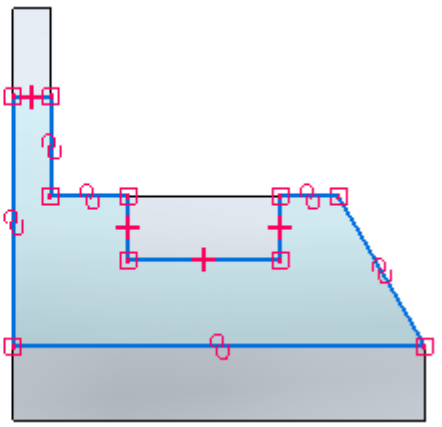

Edit display

- Turn off the Relationship Handles display.
- Switch to an isometric view. Type **Ctrl+I**.

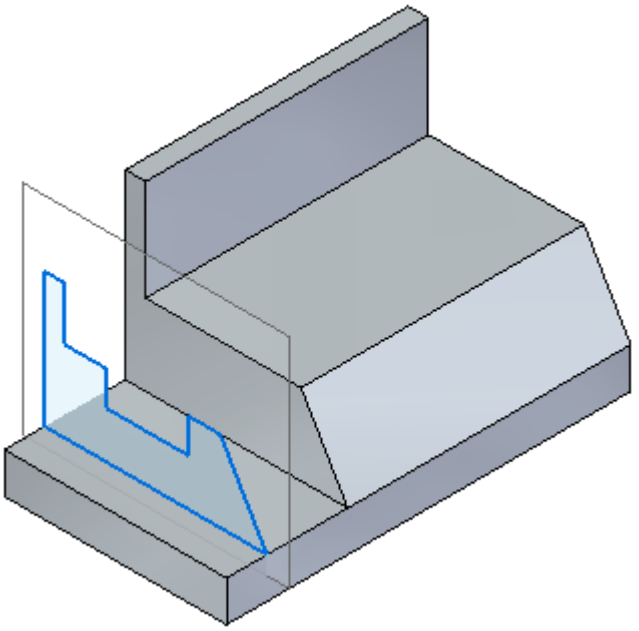

- Close the file and do not save.

Summary

In this activity you learned how to draw a sketch on a reference plane and how to include edges from part faces. You observed sketch associativity to part model edges and used the Sketch View command.

E Activity: Sketching (Part 3)

Open a part file

- Start Solid Edge.
- Click the **Application** button ® **Open**.
- In the **Open File** dialog box, set the **Look in:** field to the folder where the training files are located.
- Click *sketch_C* and then click **Open**.

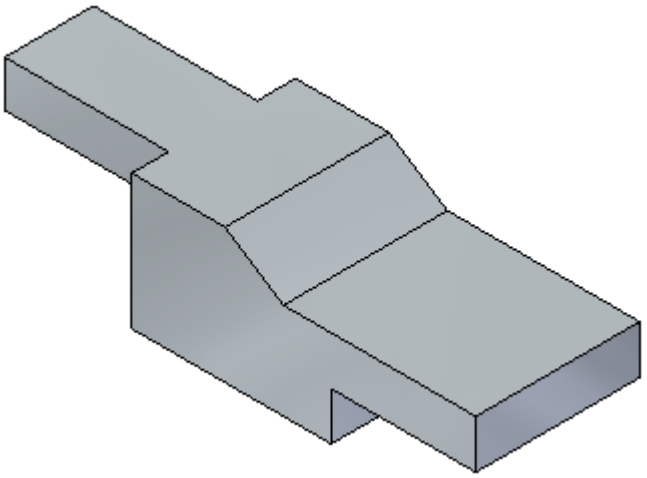

Draw a sketch on a face

- Lock to the face shown.

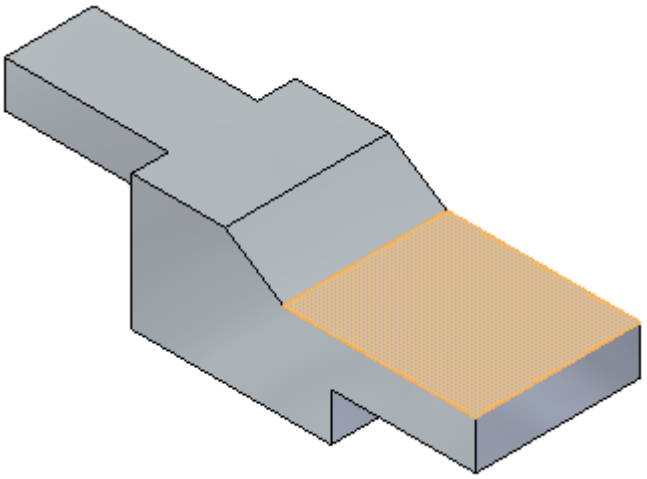

- Draw the following sketch.

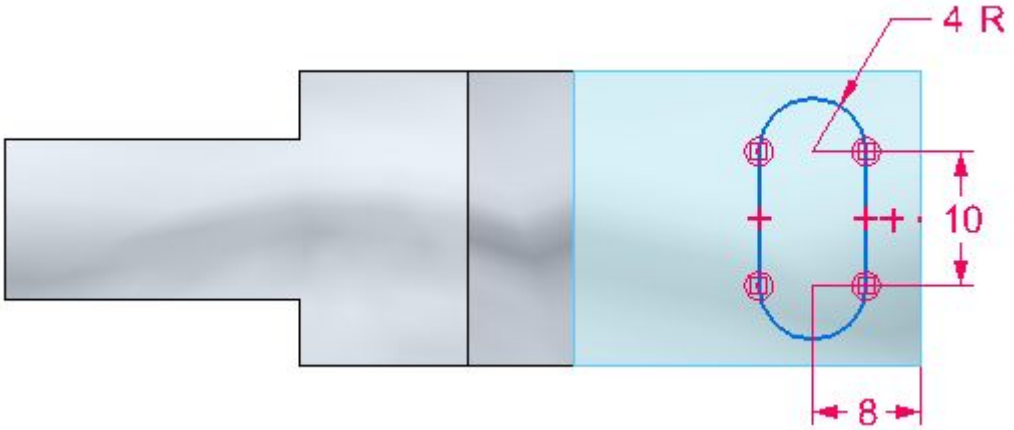

- Delete the sketch dimensions. The dimensions were placed to only define the size.
- Change the view to an isometric view. Press **Ctrl+I**.

Copy the sketch

- Unlock the sketch plane.

- Select the sketch in PathFinder.

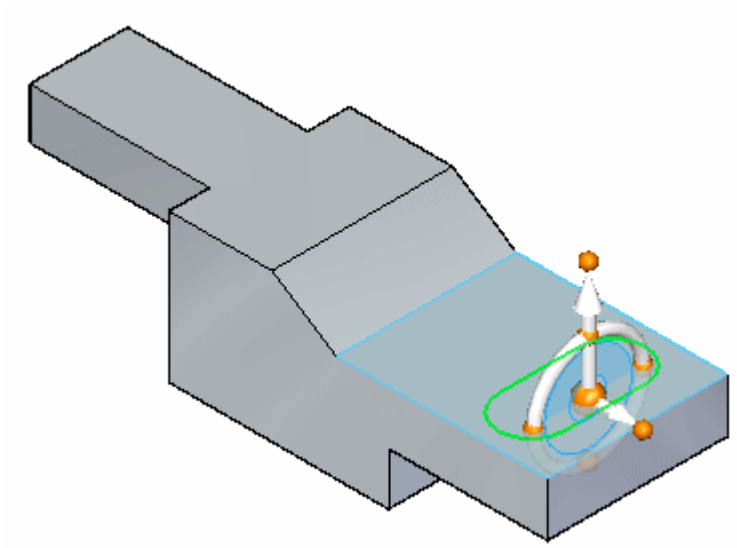

- Press **Ctrl+C** to copy the selected sketch. The sketch is added to the clipboard.

Paste the sketch

- Press **Ctrl+V**. The copied sketch is attached to the cursor. Pause the cursor over the face and then click to place the sketch as shown. You will position the sketch next.

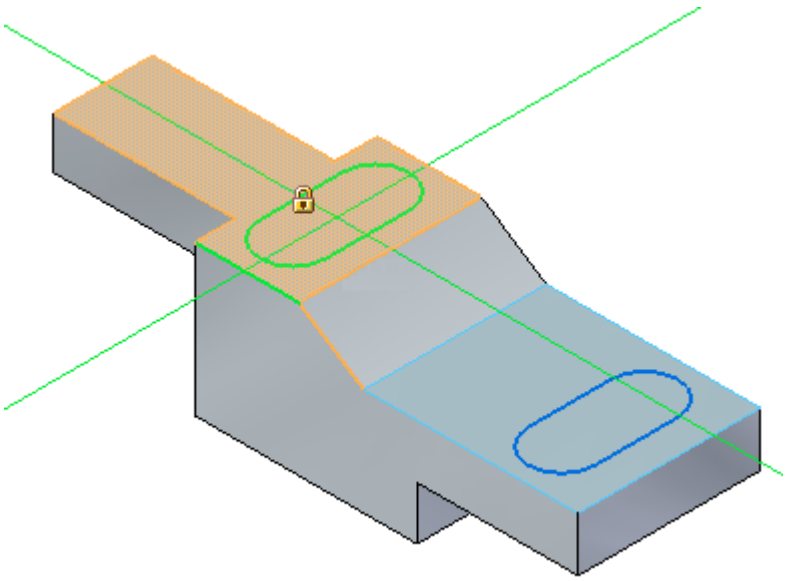

Note

You can press the **N** or **B** keys to control the copied sketch orientation. However, in this activity, use the rotate command to position the sketch.

- Press the **Esc** key to end the paste operation.

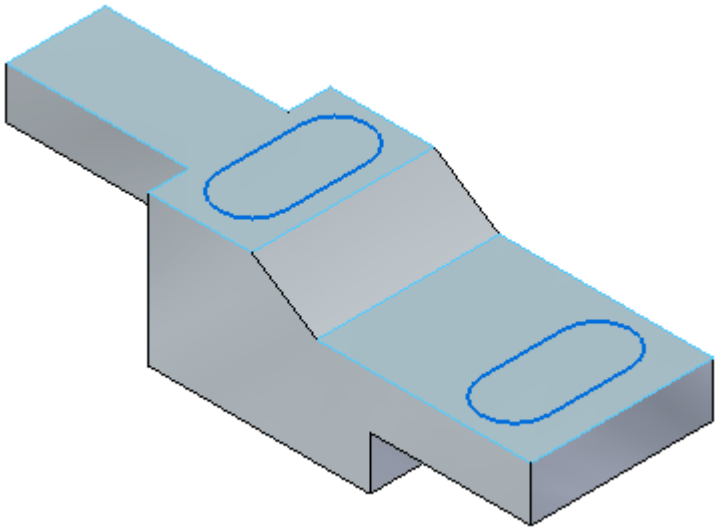

Rotate the copied sketch

- In PathFinder, right-click the copied sketch and select **Lock Sketch Plane**.
- Choose the **Sketch View** command.
- On the **Move** command drop list, choose the **Rotate** command.

- On command bar, make sure the copy option is not on.
- While holding down the **Ctrl** key, click the two lines and two arcs. The elements turn green as they are selected.

- Select the arc center as center of rotation.

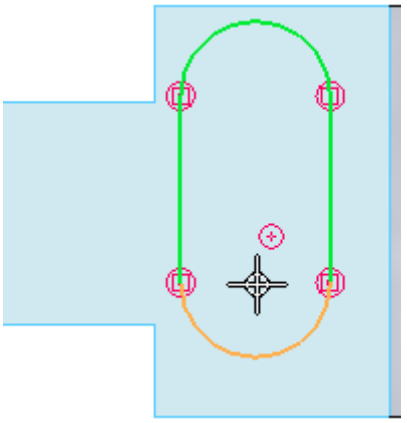

- Select the other arc center as the start point for rotation.

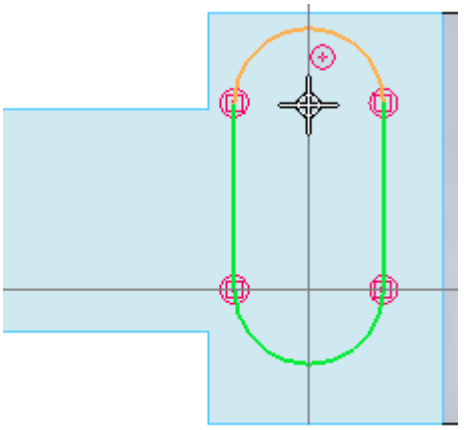

- Click when the horizontal indicator appears. This will rotate the sketch 90°.

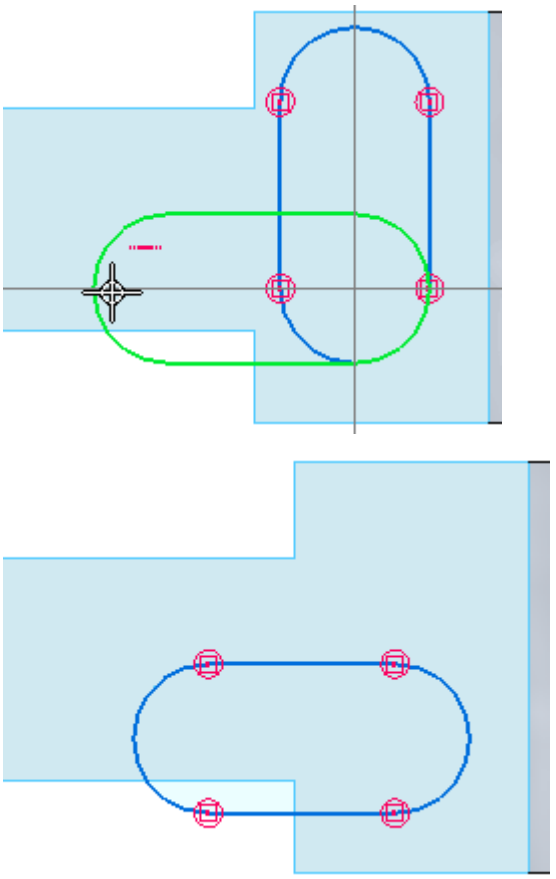

Move the copied sketch

- Choose the Move command.
- Select the four elements again. For the move from point, select the center of an arc.

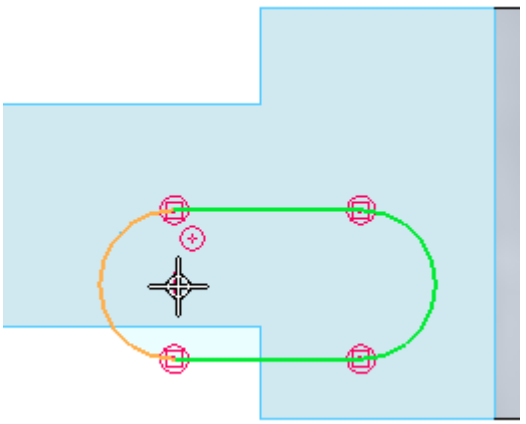

- For the to point, move the cursor over the midpoint of the top edge. The sketch will be centered to this point. Do not click.

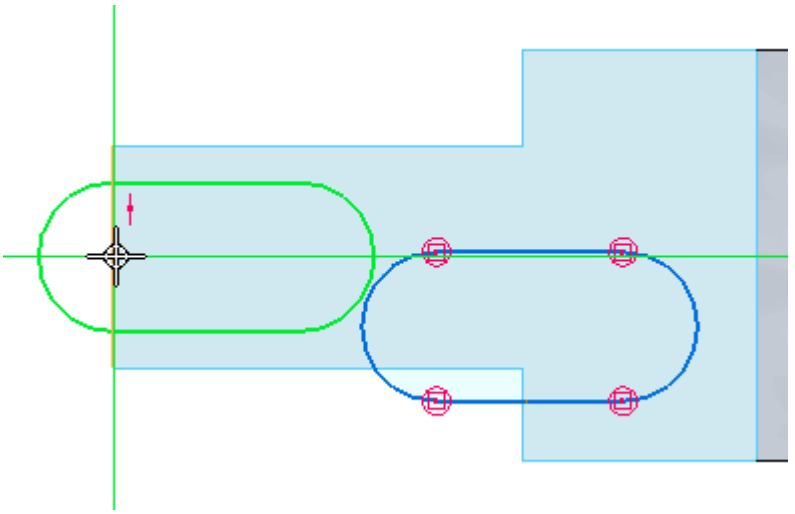

- While maintaining midpoint alignment display, move the cursor down to the location shown and click.

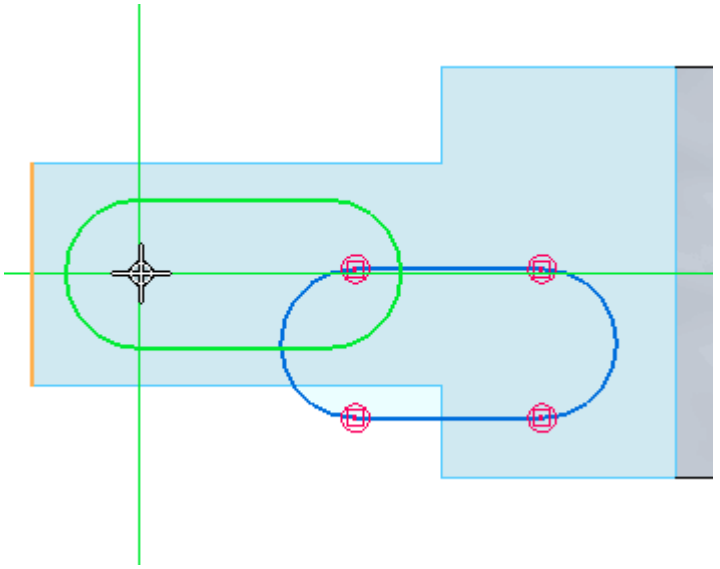

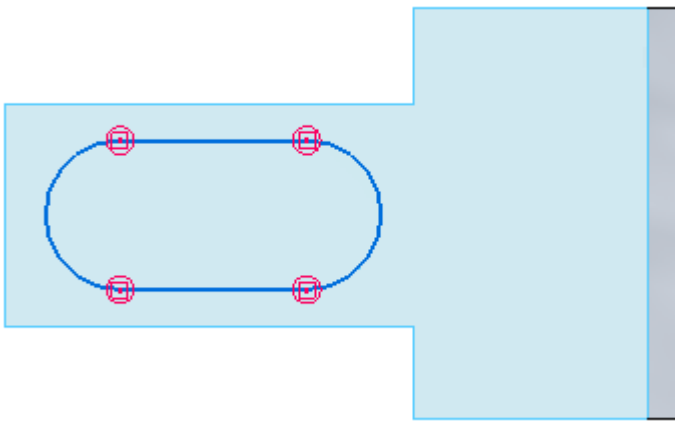

- Press **Ctrl+I**.

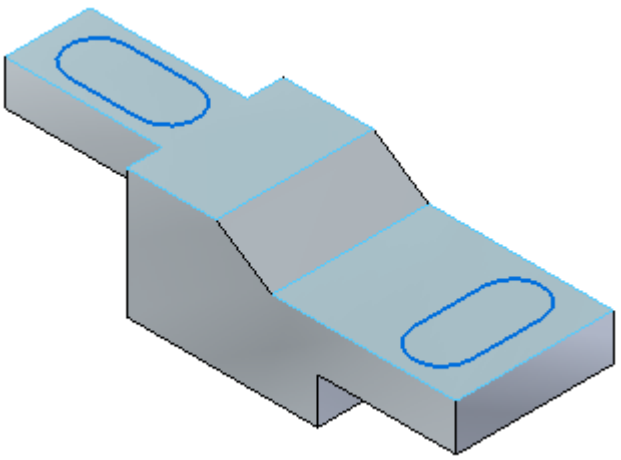

- Activity complete. Close the file and do not save.

Summary

In this activity you drew a sketch on face and learned how to copy the sketch to another face. You also learned how to rotate and move a sketch.

F Drawing A

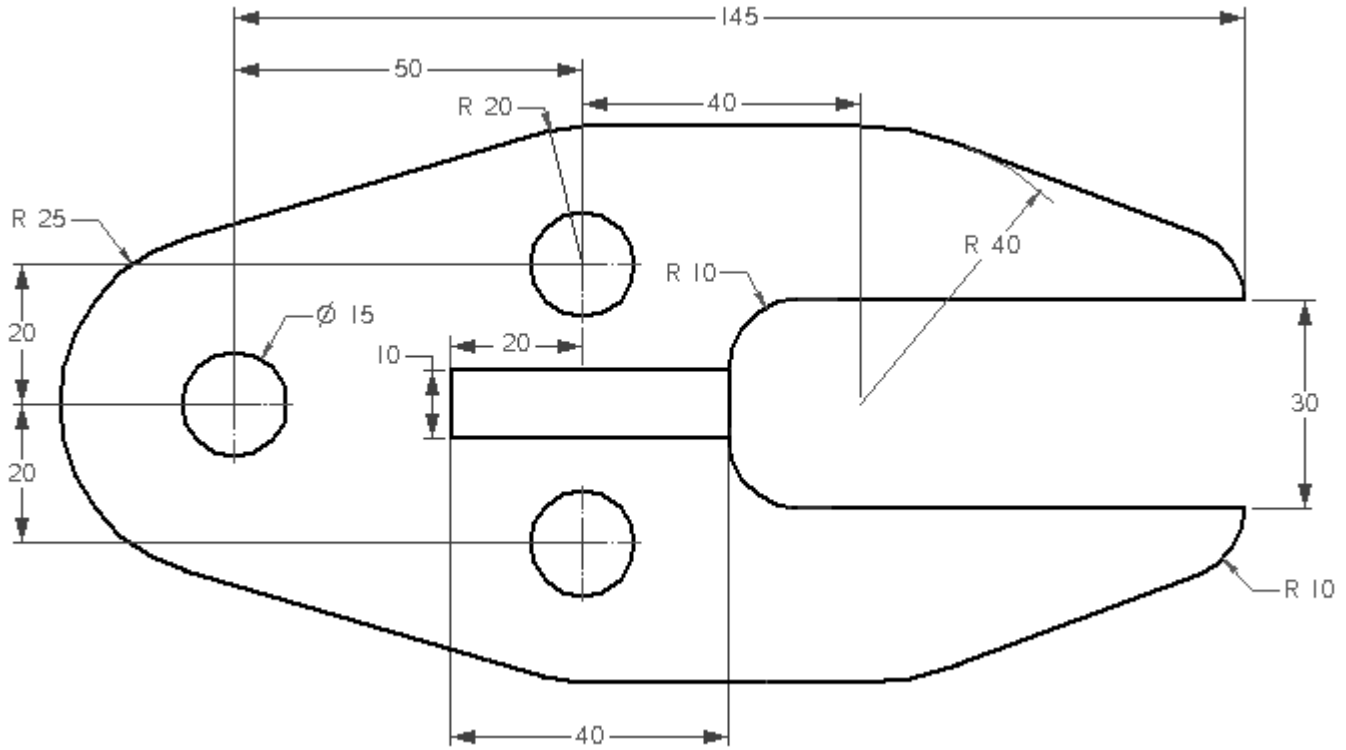

G Drawing B

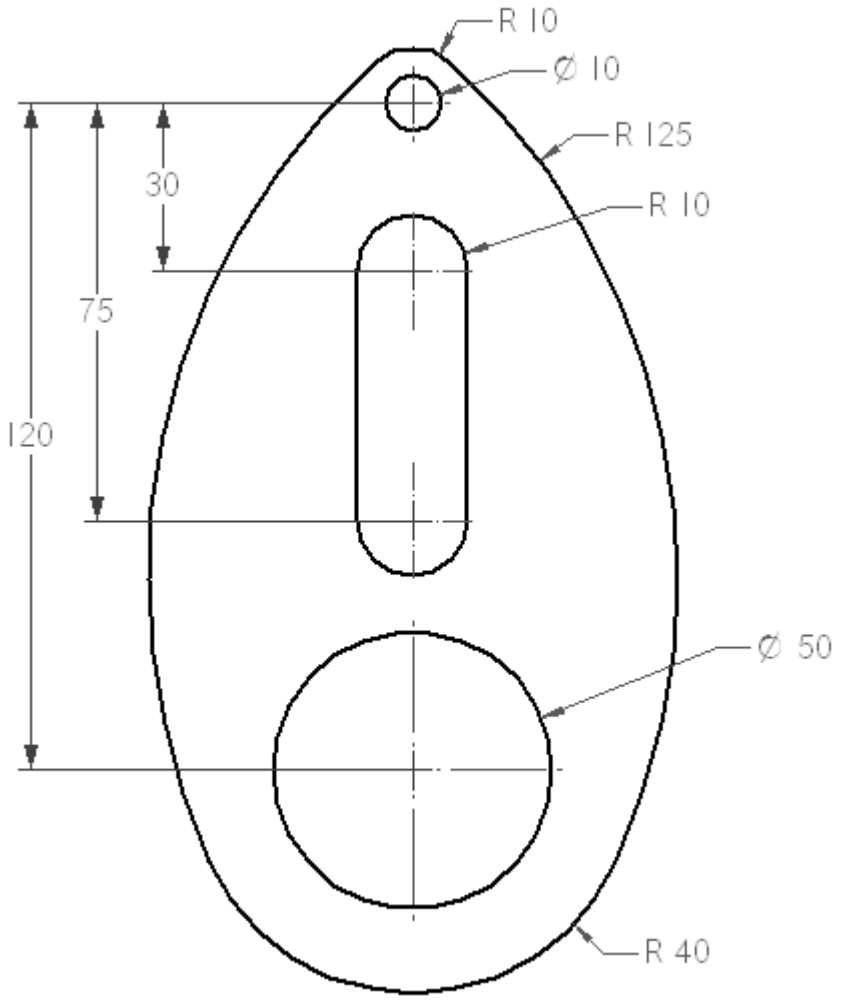

H Drawing C

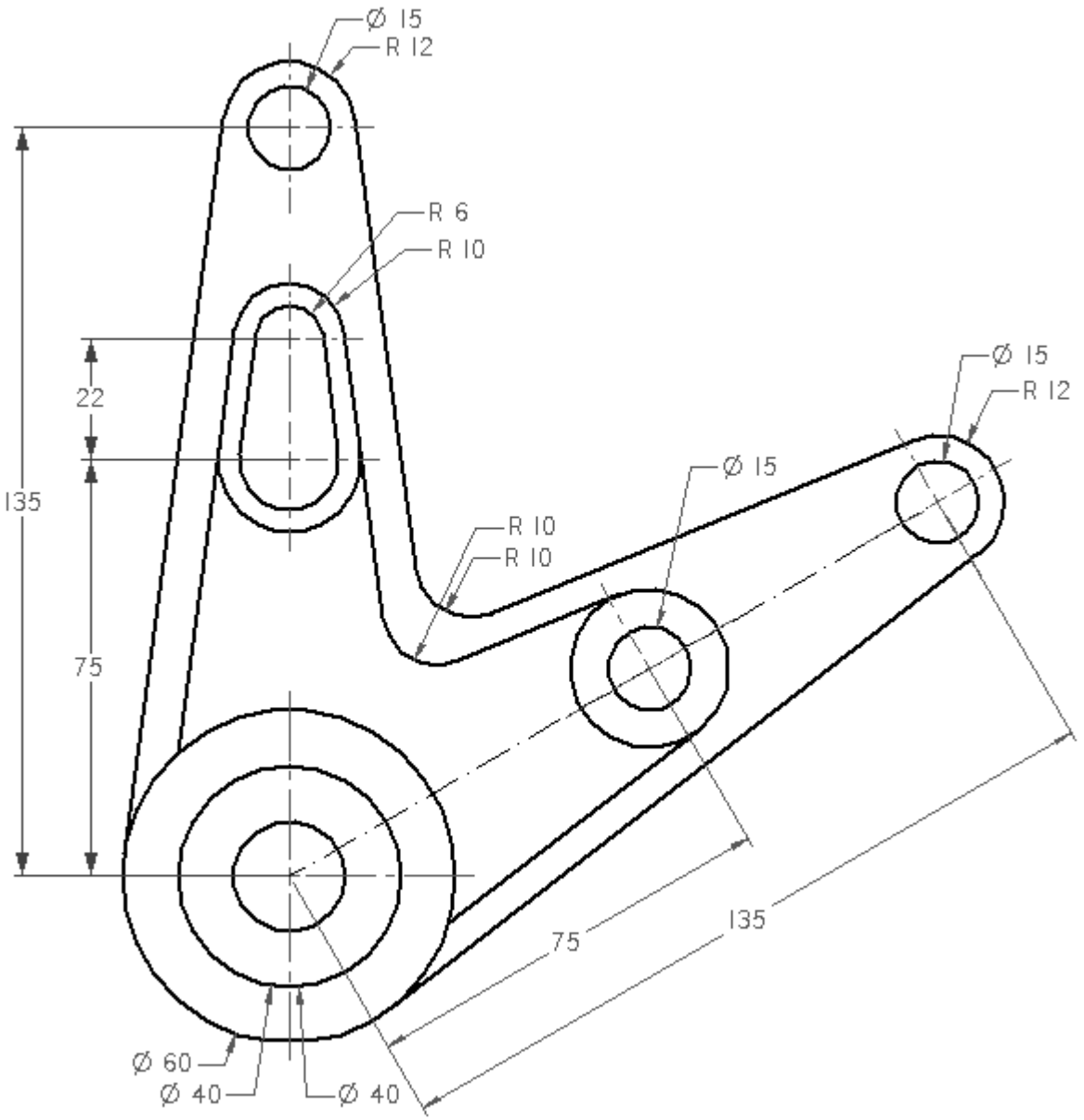

I Drawing D

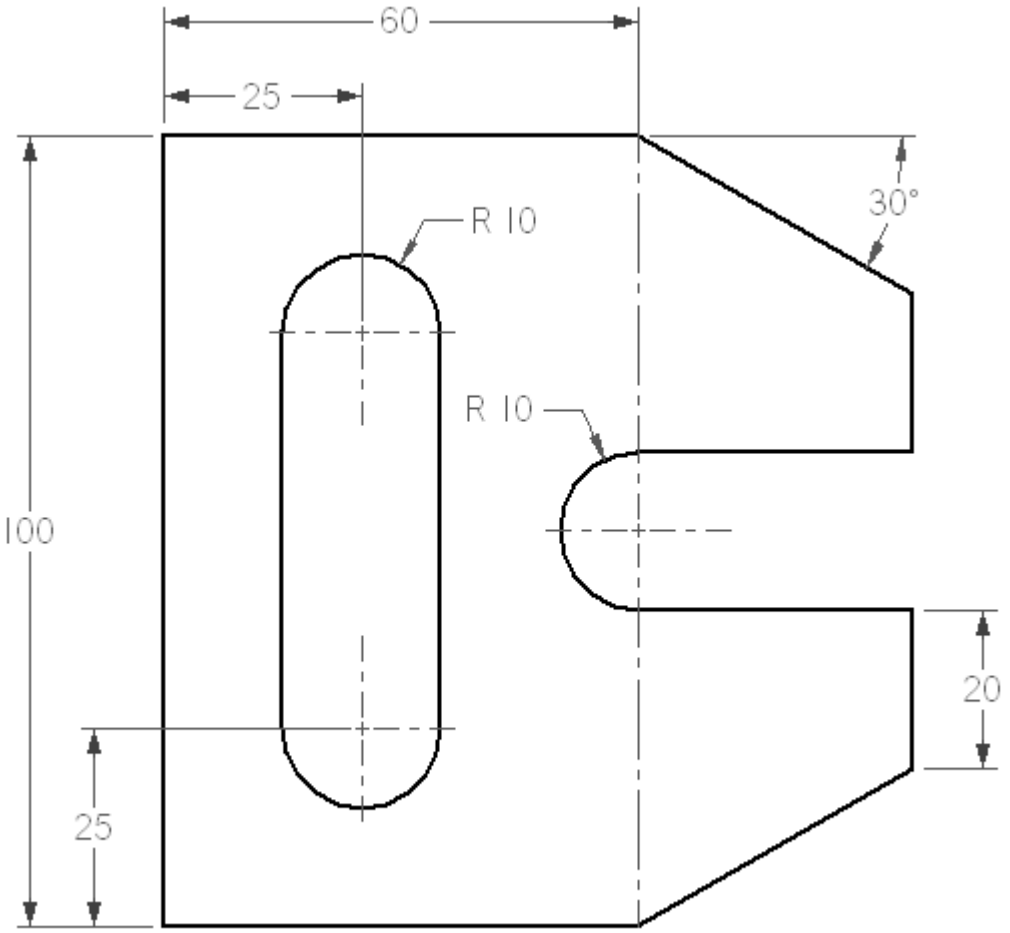
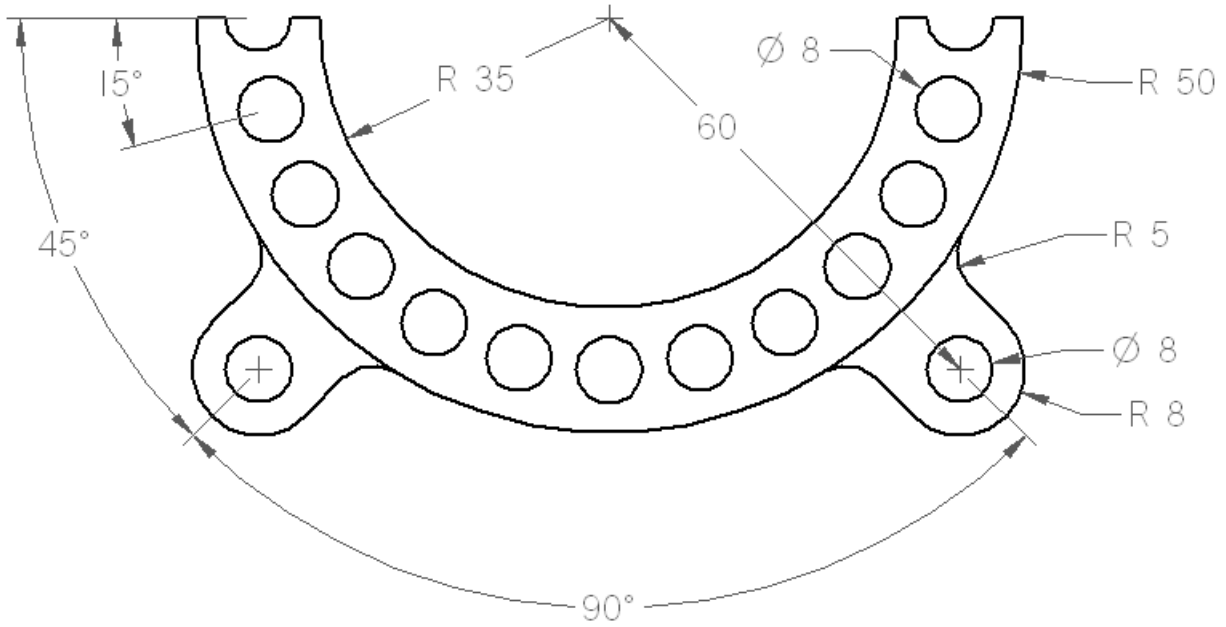
J Drawing E