Modeling a Part Using Surfaces

Publication Number
spse01560

Proprietary and restricted rights notice

This software and related documentation are proprietary to Siemens Product Lifecycle Management Software Inc.

© 2010 Siemens Product Lifecycle Management Software Inc. All Rights Reserved.

All trademarks belong to their respective holders.

SOLID EDGE
VELOCITY SERIES

...with Synchronous Technology

Contents

Introduction **1-1**

Surface modeling **2-1**

What is surfacing and why use it? 2-3
General surface modeling workflow 2-5
Lesson review 2-10
Lesson summary 2-10

Creating and editing curves **3-1**

Surface modeling approach 3-2
Overview of splines 3-3
Curve creation 3-5
Curve definition 3-6
Curve edit 3-9
Simplify 3-16
Convert to curve command 3-18
Activity: Drawing and editing a curve 3-20
BlueDot (ordered modeling) 3-21
Activity: Creating and editing BlueDots 3-26
Lesson review 3-28
Lesson summary 3-28

Indirect curve creation techniques **4-1**

Additional curve creation methods 4-2
Pierce points 4-14
Silhouette points 4-15
Image 4-15
Points, curves (and surfaces) as construction elements 4-17
Lesson review 4-20
Lesson summary 4-20

Surface creation **5-1**

Overview of surfaces 5-2
Creating a simple surface 5-3
Activity: Creating and editing simple surfaces 5-5
Using simple surfaces as construction surfaces 5-6
Sketch Tear-Off 5-7
Creating a swept surface 5-9
Activity: Creating a swept surface 5-12
Creating a lofted surface (ordered modeling) 5-13
Bounded Surface 5-16
BlueSurf 5-18
Lesson review 5-34
Lesson summary 5-34

Surface manipulation tools 6-1

Extend Surface 6-2
Offset Surface 6-4
Copy Surface 6-5
Trim Surface 6-6
Delete Faces 6-7
Stitched Surface 6-8
Round 6-10
Replace Face 6-16
Activity: Surface manipulation 6-17
Split Face 6-18
Parting Split 6-20
Parting Surface 6-21
Activity: Parting split and parting surface 6-22
Activity: Creating a rotary razor body 6-23
Activity: Putting it all together 6-24
Lesson review 6-25
Lesson summary 6-25

Curve and surface inspection tools 7-1

Curvature combs 7-2
Surface inspection tools 7-4
Lesson review 7-9
Lesson summary 7-9

Activity: Drawing and editing a curve A-1

Draw a curve A-1
Hide the sketch containing edit points A-2
Edit the curve shape A-3
Add more control to the curve A-5
Inspect the curve using Curvature Comb A-8
Draw a curve connected to elements A-10
Constrain the curve A-11
Summary A-17

Activity: Creating and editing BlueDots B-1

Use BlueDots to connect two curves B-2
Connect the four curves at the end points B-3
Edit a BlueDot B-4
Summary B-9

Activity: Creating keypoint curves C-1

Create a keypoint curve C-1
Create keypoint curves between the sketches C-4
Connect the keypoint curves with BlueDots C-5
Edit a BlueDot C-6
Include tangency on keypoint curves C-8
Summary C-10

Activity: Additional curve creation methods D-1

Create an Intersection curve D-1

Create a Cross Curve D-2
Use Project Curve D-4
Create a Contour Curve D-8
Edit the shape of the contour curve D-9
Use the Derived Curve and Split Curve creation methods D-11
Summary D-14

Activity: Creating and editing simple surfaces E-1

Create an extruded surface E-1
Modify the shape of the extruded surface E-2
Create a revolved surface E-3
Edit the shape of the revolved surface E-4
Summary E-5

Activity: Creating a swept surface F-1

Create a swept surface F-1
Modify the shape of the surface F-3
Dynamically edit the path curve F-4
Summary F-5

Activity: Creating a BlueSurf using analytics G-1

Create several BlueSurf features G-1
Create another BlueSurf G-2
Create a third BlueSurf G-5
Add cross sections to the BlueSurf G-6
Summary G-9

Activity: Creating and editing a BlueSurf H-1

Create a BlueSurf with guides H-1
Insert sketches on the BlueSurf H-2
Perform BlueDot edits to change the shape of the surface H-6
Summary H-9

Activity: Surface manipulation I-1

Extend a surface I-1
Offset a surface I-3
Project a curve onto a surface I-5
Trim a surface I-7
Copy a surface I-9
Delete faces I-10
Stitch surfaces I-14
Replace a face I-18
Summary I-20

Activity: Parting split and parting surface J-1

Create a sketch J-1
Create the core part J-2
Create the cavity J-3
Create a parting split curve on the cavity J-5
Create a parting surface J-6
Divide the part J-8

Open each of the two mold halves J-11
Summary J-13

Activity: Creating a rotary razor body K-1

Create an extruded surface K-2
Create a curve K-3
Sketch a cross-section K-4
Create additional curves K-5
Create a BlueSurf K-11
Create a bounded surface K-13
Stitch together the surfaces K-14
Create a reference plane K-15
Create an opening for the power button K-16
Create a port for the power cord K-18
Split the solid body into two K-19
Offset the rear surface K-21
Create a space for additional razor components K-22
Apply a thin wall to the part K-25
Round edges K-26
Summary K-27

Activity: Putting it all together L-1

Construct the top surface L-2
Create intersection curves to develop the front surface L-6
Create intersection curves to develop the side surfaces L-9
Create the bottom surface L-13
Add another surface L-18
Create the final surface L-21
Cap the ends L-24
Stitch together the surfaces L-24
Summary L-25

Lesson

1 *Introduction*

Welcome to self paced training for Solid Edge. This course is designed to educate you in the use of Solid Edge. The course is self-paced and contains instruction followed by activities.

Solid Edge self-paced courses

- **spse01510**—Sketching
- **spse01515**—Constructing base features
- **spse01520**—Moving and rotating faces
- **spse01525**—Working with face relationships
- **spse01530**—Constructing treatment features
- **spse01535**—Constructing procedural features
- **spse01536**—Modeling synchronous and ordered features
- **spse01540**—Modeling assemblies
- **spse01541**—Explode-Render-Animate
- **spse01545**—Creating detailed drawings
- **spse01546**—Sheet metal design
- **spse01550**—Practicing your skills with projects
- **spse01560**—Modeling a Part Using Surfaces
- **spse01610**—Solid Edge frame design
- **spse01640**—Assembly patterning
- **spse01645**—Assembly systems libraries
- **spse01650**—Working with large assemblies
- **spse01655**—Revising assemblies
- **spse01660**—Assembly reports
- **spse01665**—Replacing parts in an assembly

- **spse01670**—Designing in the context of an assembly
- **spse01675**—Assembly features
- **spse01680**—Inspecting assemblies
- **spse01685**—Alternate assemblies
- **spse01690**—Virtual components in assemblies
- **spse01695**—XpresRoute (tubing)
- **spse01696**—Creating a Wire Harness with Harness Design
- **spse01424**—Working with Solid Edge Embedded Client

Solid Edge self-paced modules

- **spse01510**—Sketching
- **spse01515**—Constructing base features
- **spse01520**—Moving and rotating faces
- **spse01525**—Working with geometric relationships
- **spse01530**—Constructing treatment features
- **spse01535**—Constructing procedural features
- **spse01536**—Modeling synchronous and ordered features
- **spse01540**—Modeling assemblies
- **spse01545**—Creating detailed drawings
- **spse01546**—Sheet metal design
- **spse01550**—Practicing your skills with projects

Start with the tutorials

Self-paced training begins where tutorials end. Tutorials are the quickest way for you to become familiar with the basics of using Solid Edge. If you do not have any experience with Solid Edge, please start by working through the tutorials for basic part modeling and editing before starting this self-paced training.

Lesson

2 *Surface modeling*

Solid Edge provides two distinct 3D modeling styles: solid modeling and surface modeling.

The solid modeling method

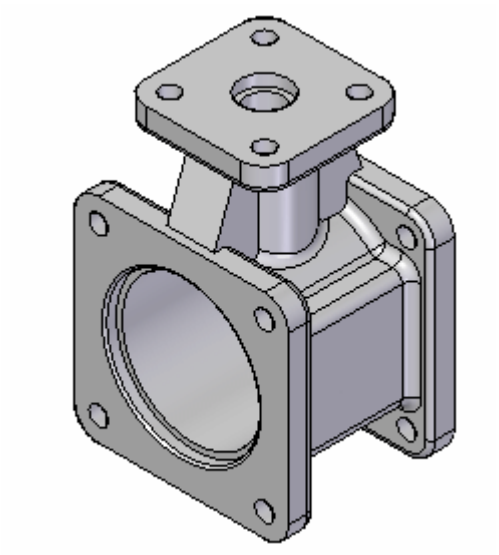

1. A product's function is the primary concern and aesthetics are purely an afterthought.

2. Solid Edge is an industry leader of this modeling style and exhibits these additional characteristics:

   - The various modeling operations are identified as features.

   - A history tree of features is maintained.

   - All properties used in defining a feature can be edited at any time.

The surface modeling method

1. Many consumer products are designed using surface modeling techniques due to the market's emphasis on style and ergonomics; therefore, a model's aesthetics is the number one concern and key element in the design process. Product function is only a secondary consideration.

2. Like the solid modeling features, Solid Edge extends this style by making each point, curve, and surface an entity that knows how it was created, and can be edited at any time.

What is surfacing and why use it?

The solid modeling method is typically used when modeling with solid features. The following are key features of the solid modeling approach:

- It is characterized by 2D sketches/profiles used in creating extrusions, revolutions, and lofts to form solids, and blends on the edges of solids.

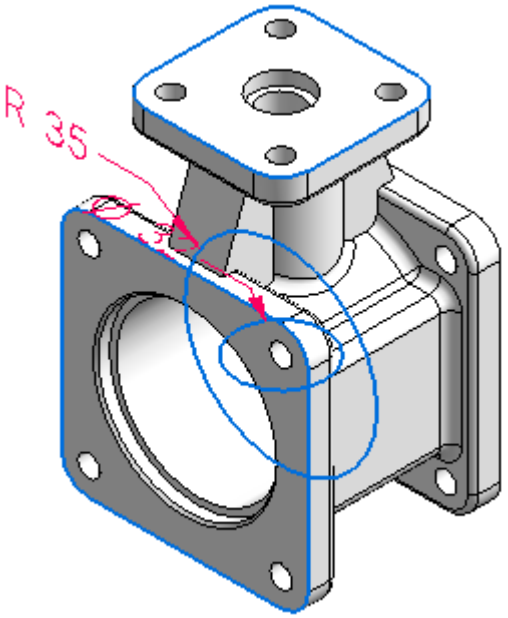

- It most often involves the addition or subtraction of material using analytic shapes.
- The model's topology is driven by faces.
- Holes are used for alignment.
- Feature faces are used for alignment as well as for mating with other features.
- Edges are rounded for safety and strength.
- Edges and faces are primarily analytic-based.

Modeling with surface-based features typically begins with a wireframe, from which surfaces are generated. Key features of surface modeling:

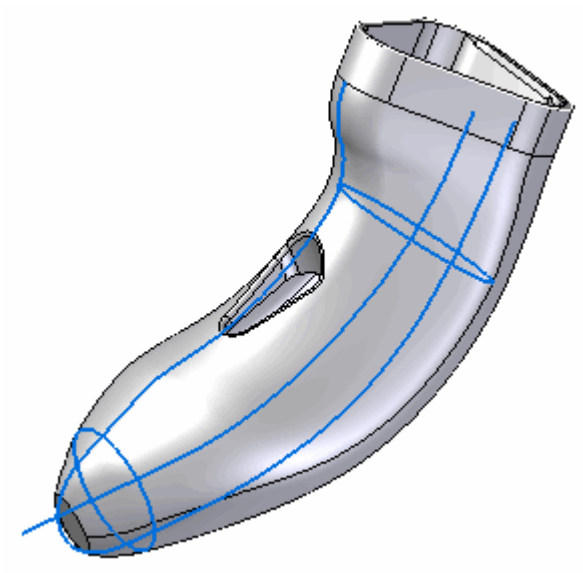

- It is characterized by control points used to define 2D and 3D curves.
- A model's topology is driven by edges and curves. Edges and faces are mainly based on splines.

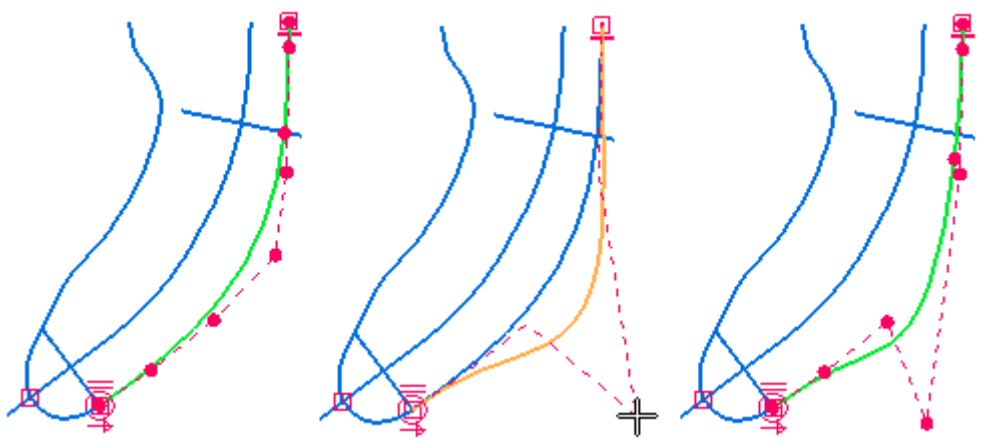

- Surface shapes are very important, therefore direct editability of underlying curves and edges is crucial.
- Highlight lines, silhouette edges and flow lines of a model are important.

General surface modeling workflow

1. **Create control drawings.**

   Definition: Control Drawings are 2D drawing views defining the top, side, and end views. Typically one or two views dominate (define the majority of the shape).

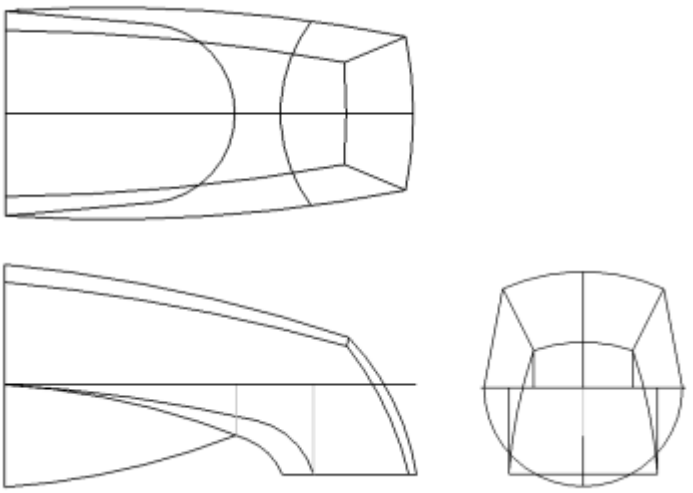

   Part environment: You can create control drawings directly by drawing on reference planes. *Pierce points* aid in connecting curves.

   Draft environment: You can create control drawings in 2D, then use Copy and Paste to transfer the 2D elements from Draft into Part. Also, you can use *Create 3D* or import sketches.

   Tip

   While drawing any sketch element in either the Part or Draft environment, use *Line Color* to help distinguish edges and construction edges in the control drawing.

   - Draw all character curves.
   - Do not over draw. Do not model rounds, ribs, or features best created with solid features.
   - Capture design intent. Add dimensions and constraints.
   - Create simple B-splines with few Edit Points.
   - Make sure view sketches register.
   - Build edge continuity into your sketches.

2. **Use 2D geometry to develop 3D curves.**

   - Project curves from control drawings.

- You may need some construction surfaces to generate 3D curves. This is very important in reducing modeling steps.
- 3D curves give simplified control over edges.
- Capture your design intent by using control drawings.

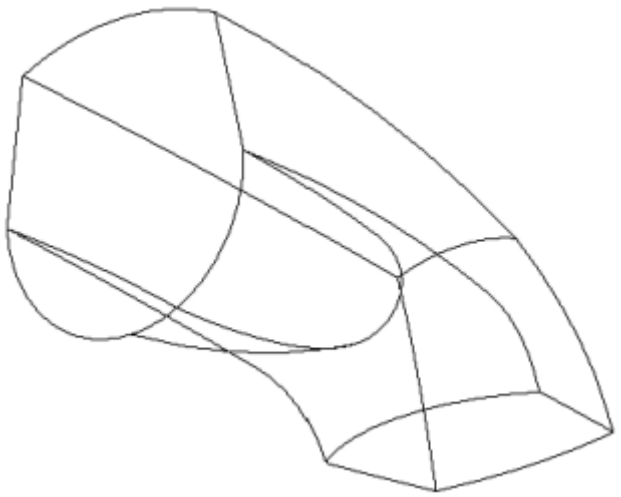

- Without 3D curves, character edges may not be captured.
- Lack of 3D edges eliminates design intent and adds more modeling.

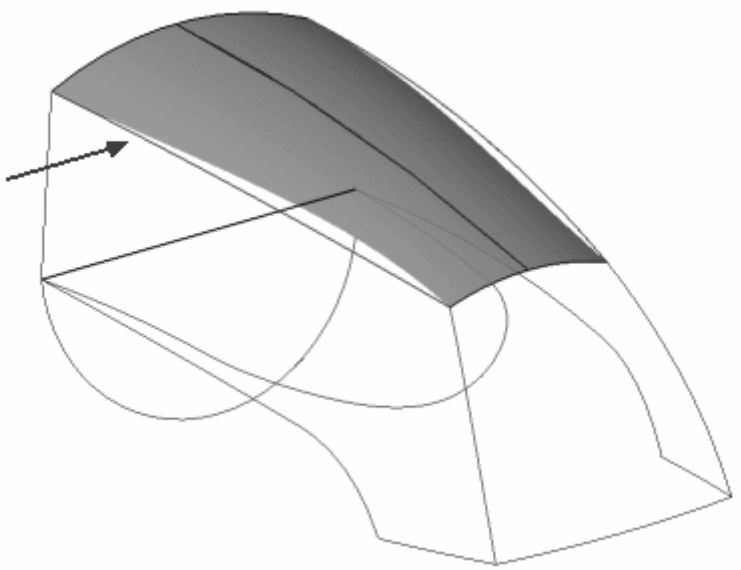

- With 3D curves, design intent is preserved and modeling is reduced.
- You can easily change the shape by altering the character curves for the respective view.

- Creating 3D edges guarantees an accurate design and reduces modeling steps.

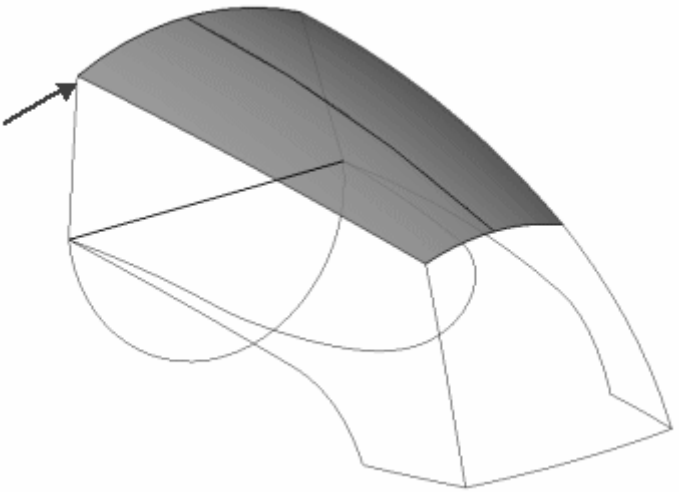

- Making changes to the 3D curve is simple. Edit the character curve in the control drawing.
- Repeat the process until all 3D curves are created
  - A “wire” representation of the model should result.
  - All 3D curves should be touching.

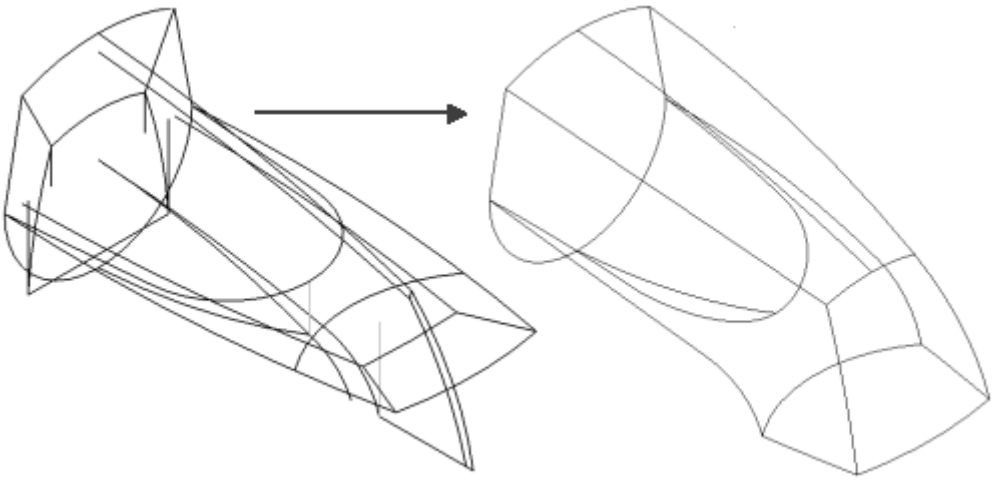

3. **Use 3D curves to develop surfaces.**
   - *BlueSurf* command.

     Inputs are guides and sections.

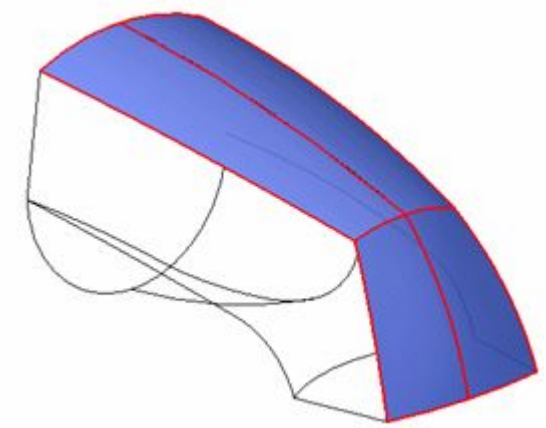

   - *Swept* command.

     Inputs are guides and sections.

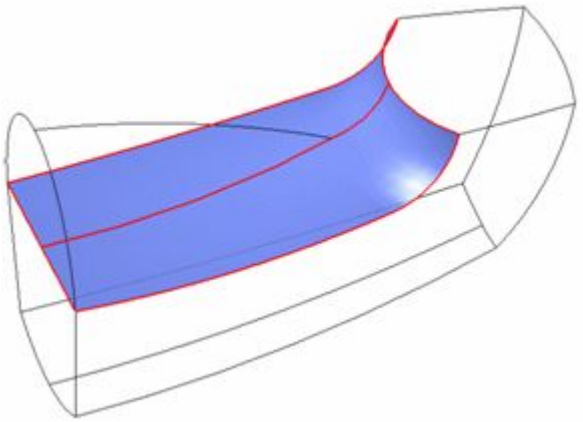

   - *Bounded* command

     N-sided patch.

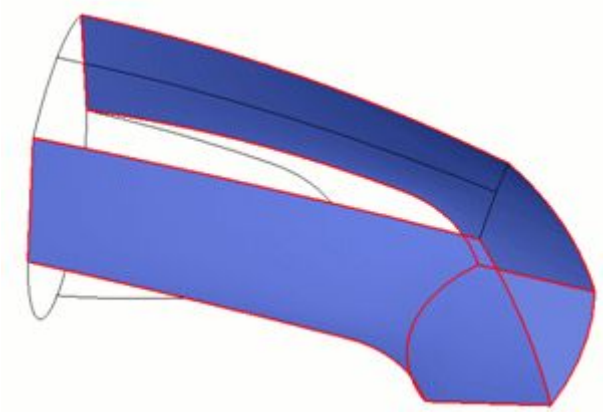

4. **Create a solid and add appropriate solid based features.**
   - Stitch together surfaces
   - Add solid-based features
     - *Thinwall*
     - Stiffening *Rib*
     - *Hole*
     - *Round*
     - *Web network*
     - *Lip*
5. **Tweak.**
   - Analyze edge continuity using:
     - *Curvature Comb*
     - *Zebra Stripes*
   - Edit character curves
   - Edit tangent vectors
   - Edit vertex mapping

Lesson review

- If a product's function takes priority over ergonomic considerations, would you design a part based on a solid modeling or surface modeling approach?
- Which modeling style (solid or surface) do the following match up with?
  - Most often involves subtraction or addition of material to form the model.
  - Control points are used to define 2D and 3D curves.
  - Edges and faces are primarily based on splines.
  - Feature faces are used for alignment with other features.

Lesson summary

You should know the differences in solid modeling and surface modeling. You should also have a clear understanding of when to use a surface modeling approach and when to use a solid modeling approach. In surface modeling, curves control the model. In solid modeling, faces control the model. Understanding the surface modeling workflow is important for success in creating and editing surfaces.

The general procedure for surface creation:

- Create Control Drawings
- Use 2D geometry to develop 3D curves
- Use 3D curves to develop surfaces
- Create a solid and add appropriate solid based feature
- Tweak

Lesson

3 Creating and editing curves

Objectives

After completing this lesson, you will be able to:

- Create curves
- Edit curves
- Analyze curves
- Create BlueDots
- Edit BlueDots

Surface modeling approach

The backbone of surface modeling is made up of cross sections and guides. Cross sections and guides can be of entity type analytic or spline.

An *analytic* entity type consists of:

- 2D: Lines, arcs, circles, ellipse, parabola, hyperbola.
- The intersection of a plane and a cone.
- 3D: Cubes, spheres, cylinders, cones, tori.

A *spline* entity type consists of:

- 2D: constructed spline curves, derived curves.
- 3D: derived spline curves.

A *solid* modeling method using revolved features results in no edge control and difficult edits. Edge (A) is a result of the intersection of two revolved surfaces. You don't have direct control over the result.

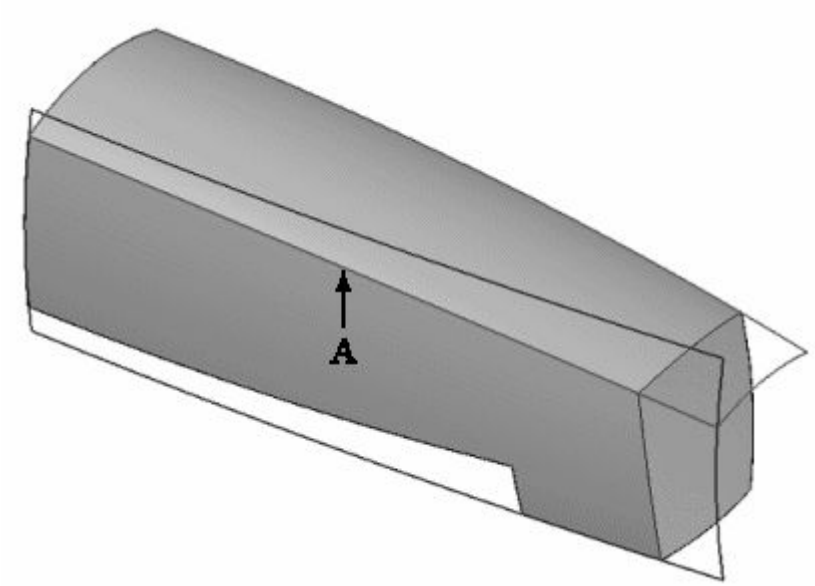

A *surface* modeling method results in exact edge control and edges are based on character curves. You have direct control over edges such as (A).

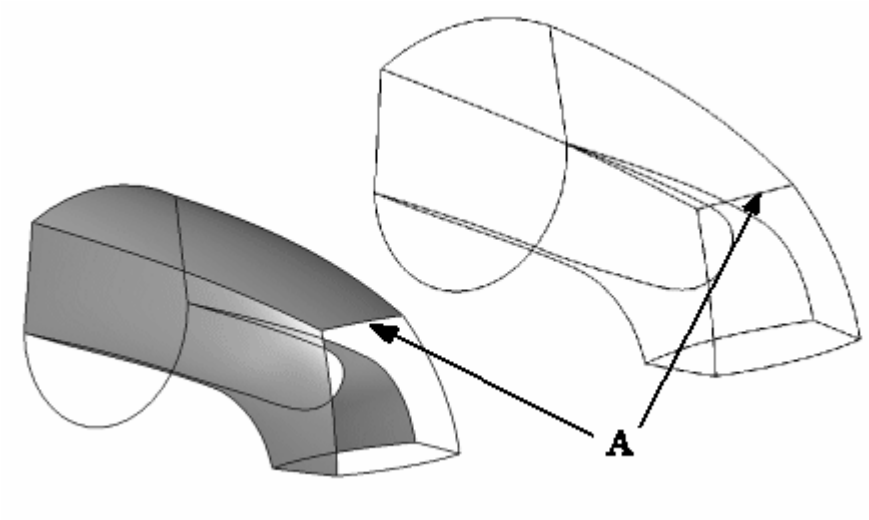

Overview of splines

A *spline* is a standard curve in most CAD systems. Unlike lines and conic curves, generally categorized as *analytics*, the spline can be adjusted to virtually any shape in two or three dimensions. Their flexible nature makes splines the foundation for surface modeling.

A spline entity type consists of:

- 2D: constructed spline curves, derived curves.
- 3D: derived spline curves.

Note

Originally, a spline was a stylist's tool made from wood or thin metal and used to draw a curve through points.

Shown below is a 2D spline.

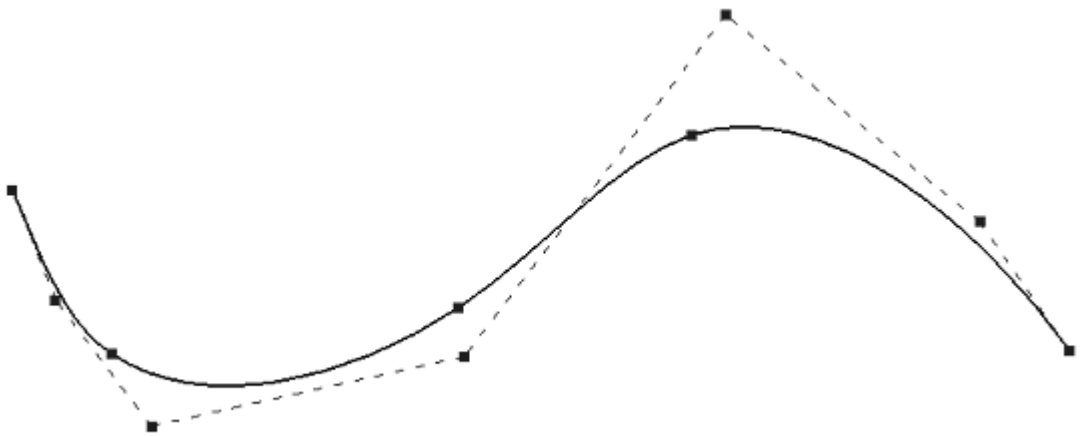

Shown below is a 3D surface based on a spline.

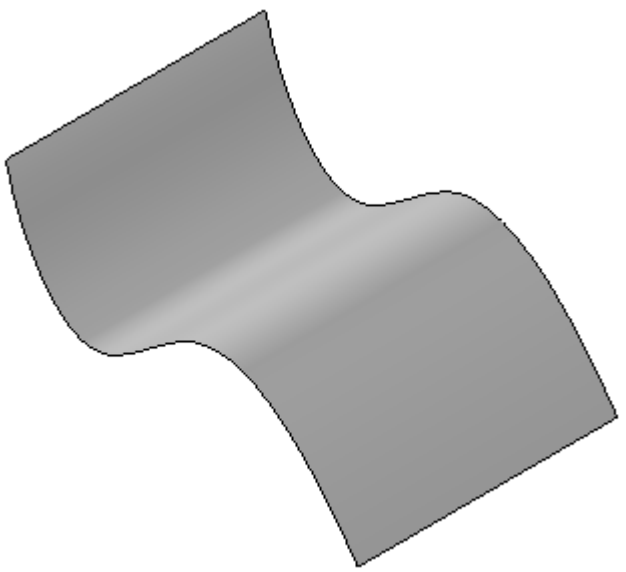

For the remainder of this course, the term *curve* will be used instead of splines. Just remember that curves are splines. There will be two types of curves discussed:

- *constructed*– You have direct control of constructed curves.
- *derived*– Derived curves are controlled by the method used to create them. Derived curves cannot be edited directly.

Curve creation

Use the **Curve** command to draw a smooth curve by points. You can click and drag, or you can click several edit points to define the curve. If you click to create edit points, you must define at least three points when you create the curve. When you click and drag to create the curve, it will have two edit points.

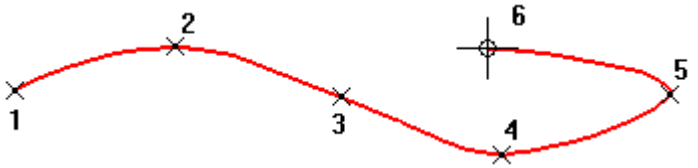

When you create a curve, edit points (A) and curve control vertex points (B) are created to help you edit and control the shape of the curve.

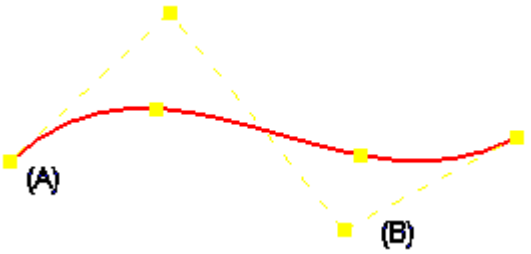

Curve definition

Control of a curve's shape is dependent on the number of control and edit points. These elements are determined by standard polynomial expressions.

Curve order

The order of a curve is equal to the degree of the curve, plus 1 (Order = Deg +1).

A polynomial curve is defined as:
x(t) = x0 +x1(t1) + x2(t2) + x3(t3)
y(t) = y0 +y1(t1) + y2(t2) + y3(t3)

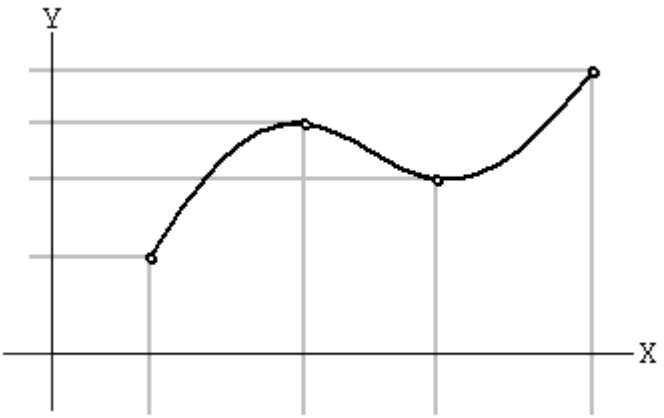

Determining control vertices.

If the number of edit points is two or three, then the number of Control Vertices = Order.

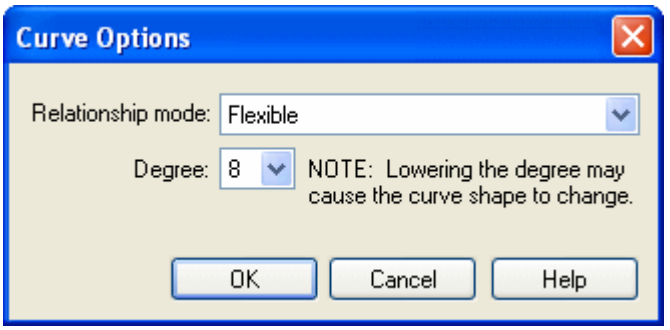

Example:

Edit points = 3
Degree = 8
Order = 9 (degree + 1)
Control Vertices = 9

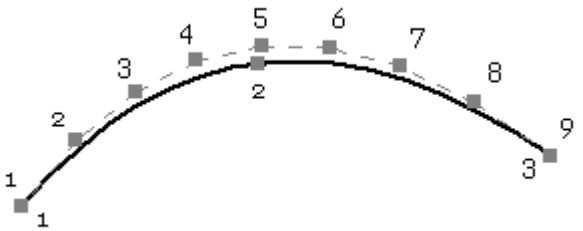

If the number of edit points is >= 4, the number of control vertices is (n+2) + {(n-1) x (k-4).
Where n = Edit Points, and k = Order.

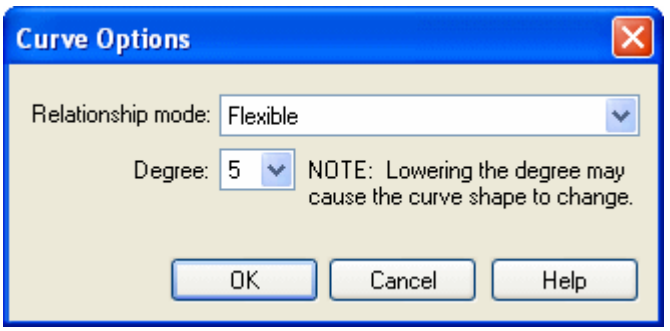

Example:

Edit points = 7
Degree = 5
Order = 6 (degree + 1)
Control Vertices = 21

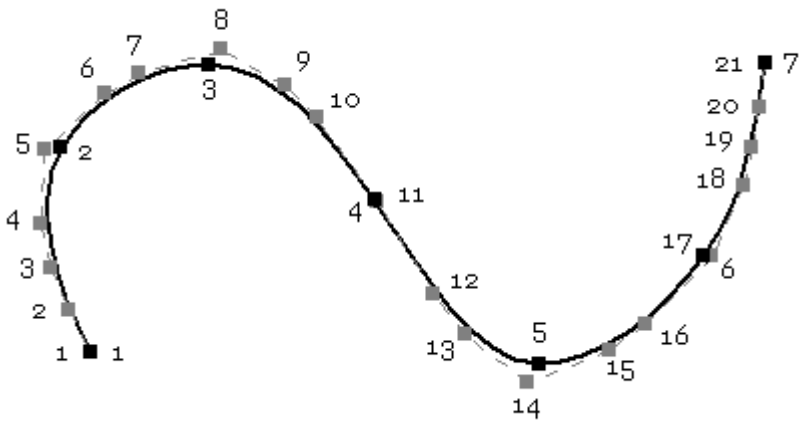
8
7
6
9
3
10
5
2
11
4
4
3
12
2
5
1
1
13
16
15
14
21
7
20
19
18
17
6

Curve edit

You can edit curves at any time via one of two methods for editing curves.

1. Edit Profile mode: Just like editing a sketch.

2. Dynamic Edit mode: Shows all of the control and edit points.

When you move a control point or edit point, the curve updates automatically; any surface that has the curve as one of its defining entities will update dynamically.

The *Add/Remove Points* and *Curve Options* buttons are disabled in dynamic edit mode. These options are only available in Edit Profile mode.

Add/Remove Points

Show Polygon

Show Curvature Comb

Shape Edit

Local Edit

Curve Options

Editing curves

The Curve dialog box lets you control how the shape of the curve changes when you make changes to the edit points and control vertex points.

The Shape Edit and Local Edit buttons control the shape of the curve when you move a point on the curve.

When you select the Shape Edit button, you affect the shape of the entire curve when you move a point on the curve.

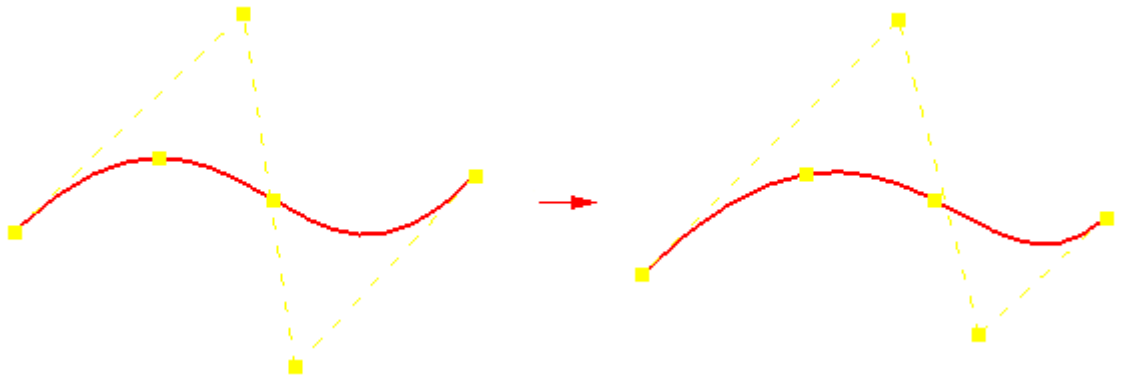

When you select the Local Edit button, you affect the shape of the curve around the edit point.

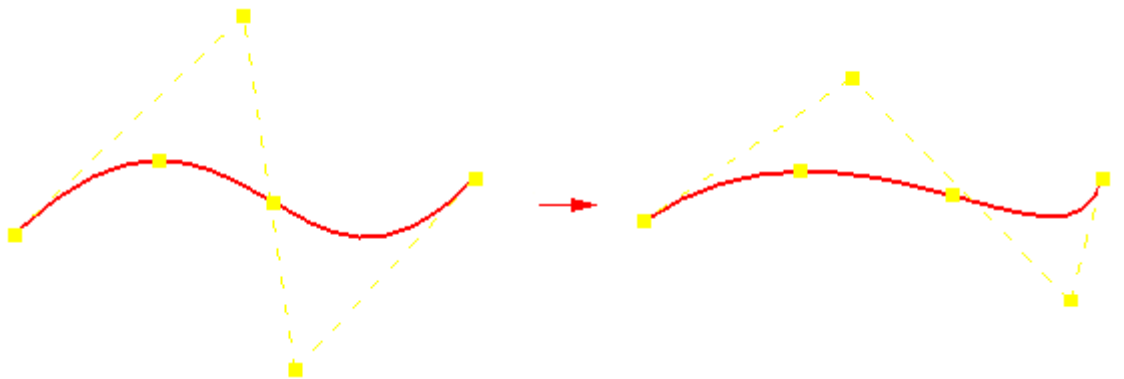

With Local Edit, if you drag a vertex point on an unconstrained curve, no other vertex points will move. However, if you drag a vertex point on a curve that has some relationships, then other vertex points may move as well, in order to adapt to the new location of the vertex point you moved while still maintaining the relationships.

Note

You cannot drag an edit point that is fully constrained.

You can select the Curve Options button to display the Curve Options dialog box. This dialog box allows you to change the number of degrees for the curve and specify the relationship mode for the curve. You can set the relationship node to:

- Flexible
- Rigid

In Flexible mode you can use external relationships to control the shape of the curve. For example, you can apply a dimension relationship on the curve and as you make changes to the dimensions, the shape of the curve automatically updates.

In Rigid mode you cannot use external relationships to control the shape of the curve. Instead, the curve shape remains unchanged and the curve simply rotates.

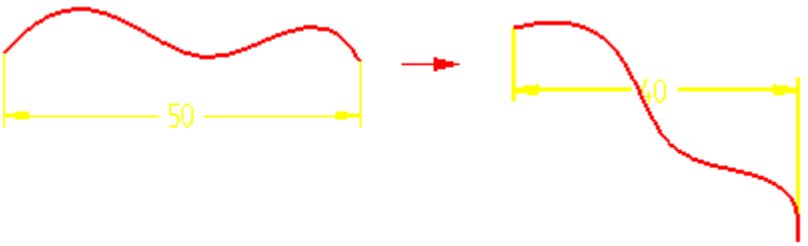

Curve options

Curve options are shown below.

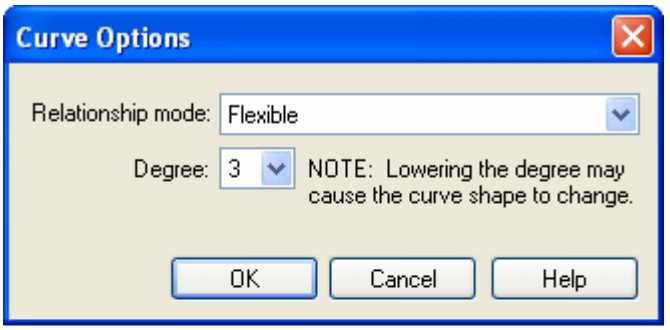

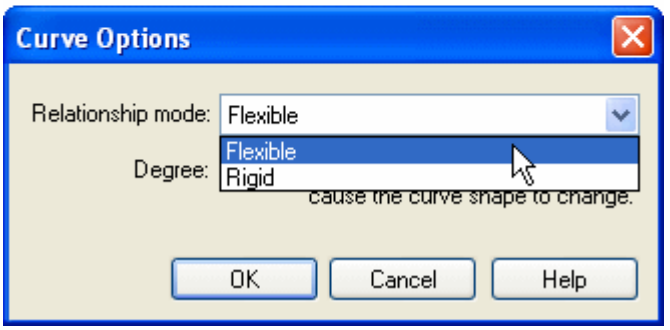

Relationship modes

- Flexible allows you to modify the curve shape during BlueDot edits or an edit to a curve connected to another curve with a connect relationship applied.
- Rigid locks the curve shape. Curve shape will not change during BlueDot edits or an edit to a curve connected to another curve with a connect relationship applied.

Note

These relationships are applied to external edits (BlueDot or dynamic edit). In Edit Profile mode, a curve set to rigid can have its shape modified.

Degree

The Curve Options dialog box allows control of curve degree and relationship mode. The default degree is three. The higher the degree, the more control you have in making local curve edits.

Notice in the illustration below that curve (A) shows the default degree of 3. Curve (B) has degree increased to 4. The higher the degree, the more control you have for editing the curve.

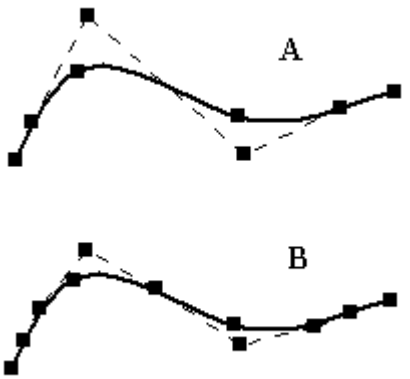

Element properties

Element properties of a curve can be displayed while in the Edit Profile mode. Right-click the curve and then on the shortcut menu, click *Properties*.

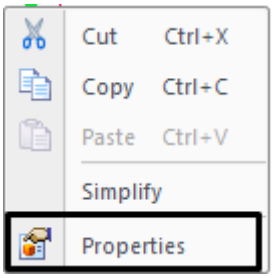

The Element Properties form is informational only. You cannot modify an element using the form.

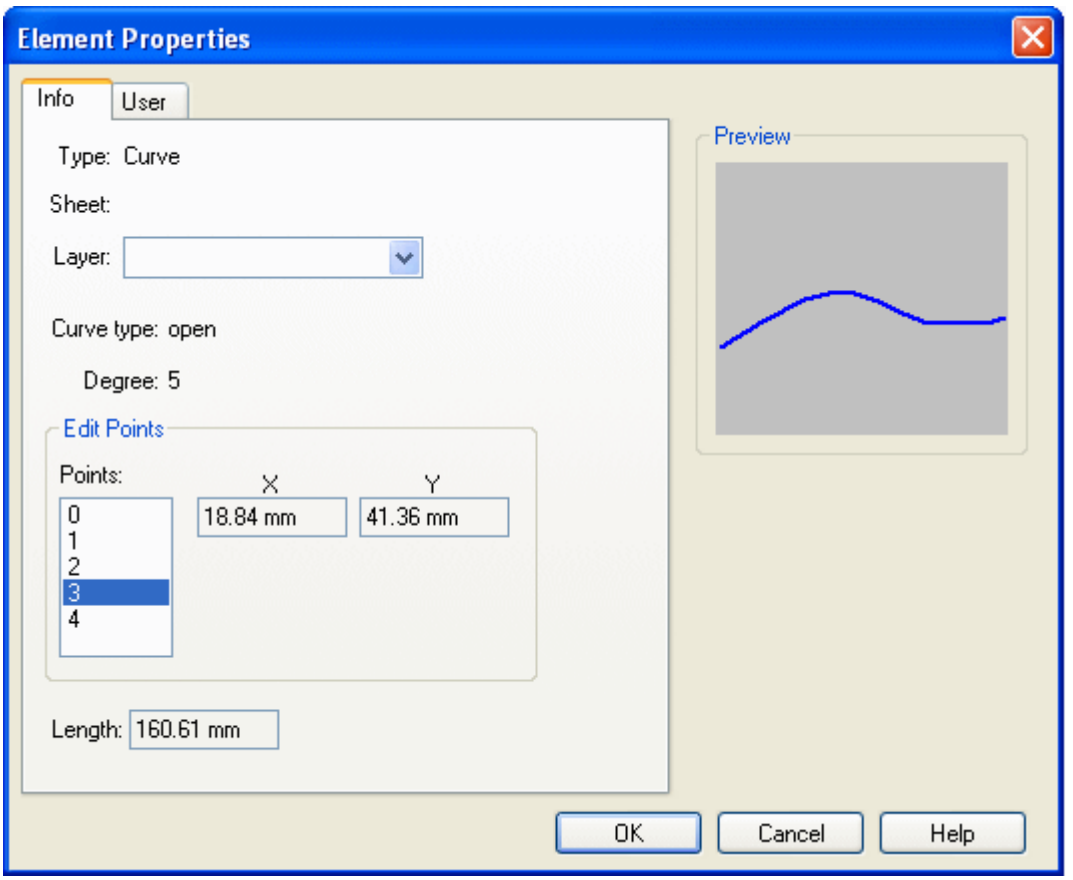

Displaying curves

You can use the options on the Curve command bar to control the display of a curve.

The Insert Point button adds or removes edit points along the curve. To add a point, click the button and then click the insertion point on the curve. When you add an edit point, the shape of the curve does not change. If the number of edit points on the curve is the same as the number of control vertex points, adding an edit point adds a corresponding control vertex point. The control vertex point moves to maintain the shape of the curve.

To remove a point, hold the Alt key and click the point you want to remove. When you remove edit points, the control vertex points move and the shape of the curve changes.

Note

If there are only two edit points on the curve, you cannot remove an edit point from the curve.

The Show Polygon button allows you to display the control polygon of the curve and use it to edit the curve.

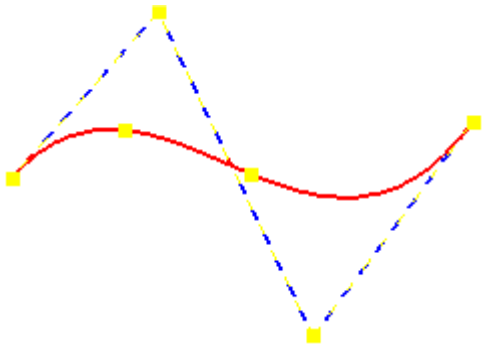

The edit points and control vertex points are handles that you can drag to change the shape of the curve.

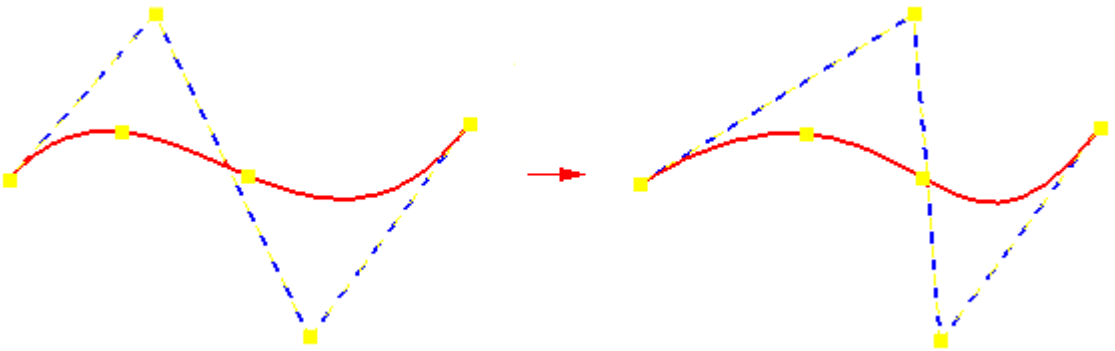

Note

You can also use these points as keypoints for relationships and dimensions.

The Show Curvature Comb button displays the curvature comb for the curve. This helps you determine how quickly or gradually curves change and where they change direction.

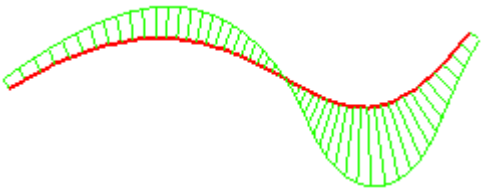

You can use the Curvature Comb Settings command to control the density and magnitude of the curve.

Simplify

- Curve data can be manually created or can be read in from foreign data.
- Manually created curve data usually contains a limited number of control points.
- Foreign data may come from a digitized set of control points, which could contain a large amount of points.
- Simplify curve is a tool that allows you to define a tolerance to reduce the number of edit points and control vertices.

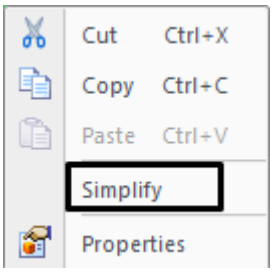

Note

Visualize tolerance as a tube. The original curve is at the center of a zero diameter tube. As the tube diameter (tolerance) increases, edit points are reduced as the curve shape is confined to the tube diameter. As the tolerance increases the curve is simplified.

Note

You can visually observe the curve simplification process as the tolerance increases using the right arrow in the dialog box.

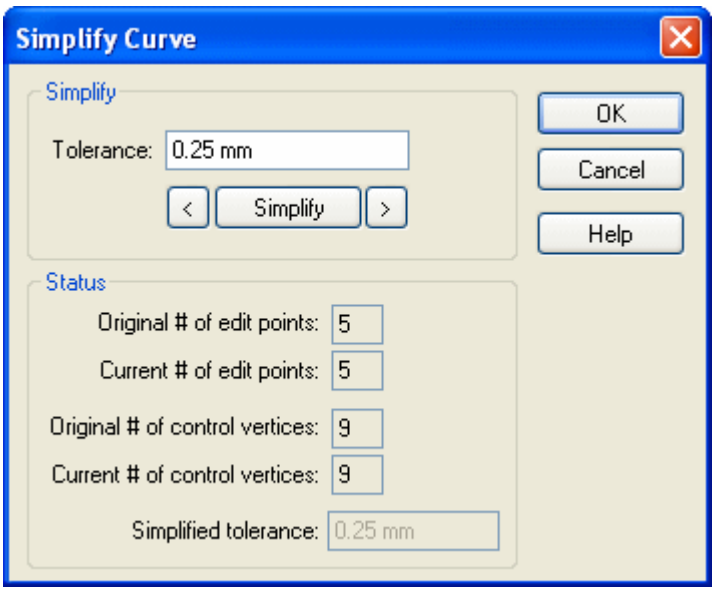

The following is an example of a curve with a large number of edit points and control vertices. Simplify curve was used to reduce the number of points. The curve shape changed slightly. You can visually observe the curve changes as the tolerance increase.

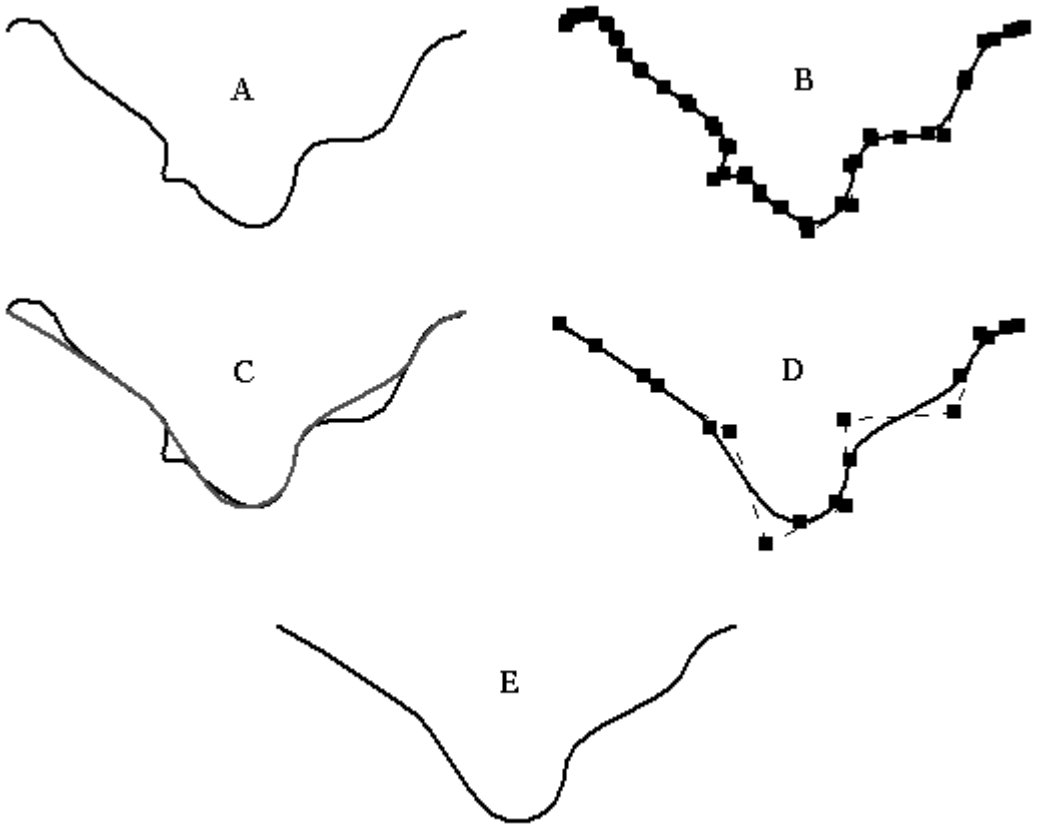

(A) Original curve

(B) Original curve in edit mode with 25 edit points and 27 control vertices

(C) Dynamic display as curve simplify tolerance is increased

(D) Resulting simplified curve reduced to 7 edit points and 9 control vertices

(E) Simplified curve

Note

If the number of edit points is equal to 2 then the simplification continues by removing control vertices. Simplification ends when the number of control vertices is equal to the curve order.

Convert to curve command

What does it do? *Convert to Curve* converts analytics into curves.

Why convert?

- Analytical elements are often utilized as cross-sections and guide paths during surface creation. The resulting surface has inherent limitations on how it can be edited, as lines remain linear and arcs retain their circular definition.
- Curves provide more control, therefore are easier to use.
- Increased control facilitates edits.
  - Allows modification of a curve's properties.
  - Defaults to a degree of 2. You can increase the degree and add edit points for more control.
- Once converted, curve shapes will have greater control over associated complex surfaces.
  - Simplifies the manipulation of a model from initial concept through final production.
- Can be used on the following analytics:
  - Single non-connected analytic element: conversion results in a single non-connected bspline curve.
  - Multiple connected analytic elements.
    - Non-tangent elements: conversion results in multiple connected b-spline curves with no cusps.
    - Tangent elements: conversion results in multiple connected and tangent b-spline curves.

Note

You can only convert analytics to curves while in the Edit Profile mode.

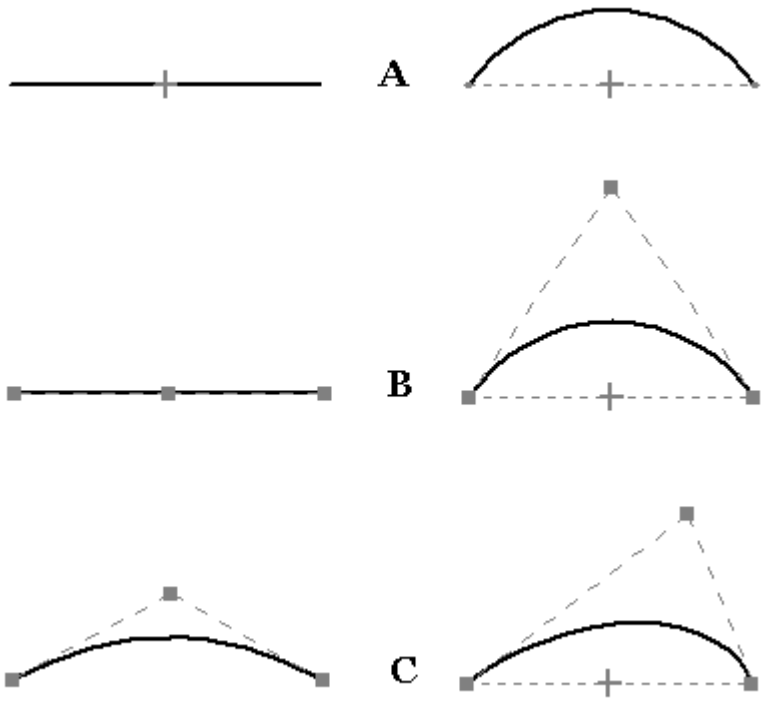

(A) Analytic line and arc element

(B) Analytic elements converted to curves

(C) Curve edits

Activity: Drawing and editing a curve

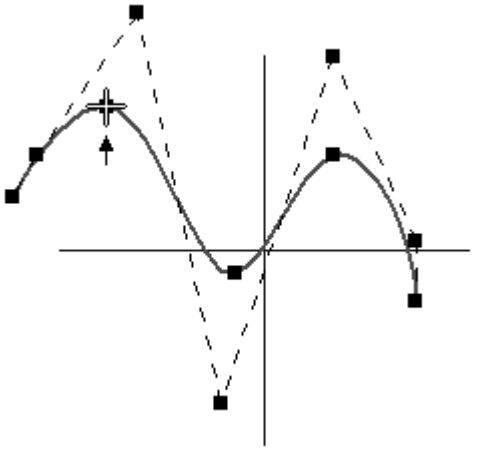

Overview

In this activity, you will learn to use the curve creation tools. Curves are the backbone for creating and controlling surface shape.

Objectives

After completing this activity you will be able to:

- Create curves
- Edit curves
- Analyze curves

Turn to Appendix A for the activity.

BlueDot (ordered modeling)

A *BlueDot* is a point where two curves or analytics connect, or where one curve and one analytic connect, thereby providing a control point between the curves. It is a point which can edited to suit design or styling needs.

Note

Blue Dots are only available in ordered modeling.

BlueDot editing is not history-dependent.

BlueDots can be directly moved without having to access another feature in the Pathfinder.

Also, the connectivity and editing of the two curves/analytics is order-independent, resulting in easier overall surface modifiability.

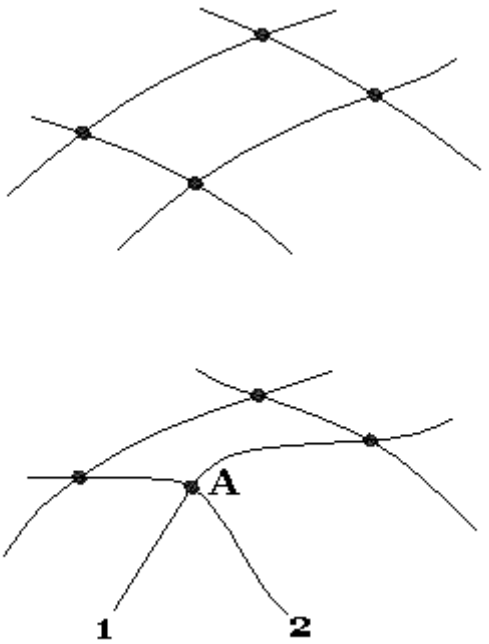

Notice in the previous illustration that as BlueDot (A) changes location, curves 1 and 2 remain connected. The shape of curves 1 and 2 change. This example illustrates the edit curve option set to Shape Edit. Both curves maintain their shape.

Create a Blue Dot

Step 1: Select Surfacing tab® Surfaces group® BlueDot.

Step 2: To create a BlueDot, identify the two curves to connect.

- The first curve selected will move to intersect the second curve.
- The shape of the first selected curve may change, but the second curve will maintain its shape in addition to its location.
- Each curve has four select zones:
  - two endpoints
  - a midpoint
  - the curve itself

Note

You can only select analytics at their endpoints.

- If an endpoint or midpoint is selected, a red dot will appear, and that point on the curve will move to the selected zone on the second curve. Depending on how the curves are selected, several solutions exist for their connectivity.

Edit a Blue Dot

Editing the location of a BlueDot.

- You can drag its location during Dynamic Edit using the OrientXpres tool.

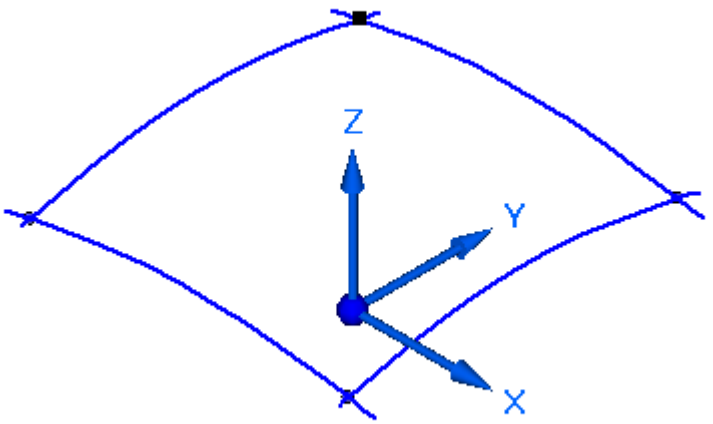

- You can change its x, y, and z coordinates on the Edit Definition command bar.

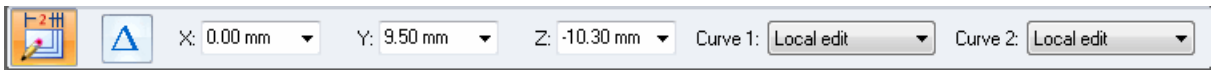

Note

- These changes occur in real-time.
- Movement of a BlueDot will directly affect the connected curves/analytics: the BlueDot overrides any existing associativity of the elements. This allows you to edit the location of the BlueDot or the elements it connects without regard to the order in which the elements were constructed.
- For curves, shape changes will occur, the breadth of which will be dependent upon their corresponding edit type (shape, local or rigid).
- Since an analytic does not have a shape-control option, only its position and/or orientation will change.
- When you apply a BlueDot to b-spline curves, you can also control how the curves react to the edit by setting options on the Curve 1 and Curve 2 controls on the ribbon bar.

Procedure

Step 1: To edit a BlueDot, click the Select tool and pause the cursor over the BlueDot.

Step 2: Use QuickPick because there are normally three elements to choose from (two curves and the BlueDot). Click the BlueDot, then Dynamic Edit.

Step 3: A 3D triad appears, allowing you to define the BlueDot edit direction. Do one of the following:

- Lock movement in the x, y or z direction. If you select a direction on the 3D triad, focus on the command bar will be on that direction field.
- Lock movement in the xy, yz or xz planes. If you select a plane, you can only enter coordinates in the 2 directions of the plane.
- Dynamic movement in all directions, following your cursor. You can drag the BlueDot to new locations or enter the coordinate values.

  Notice that the coordinates of the BlueDot are displayed on the command bar.

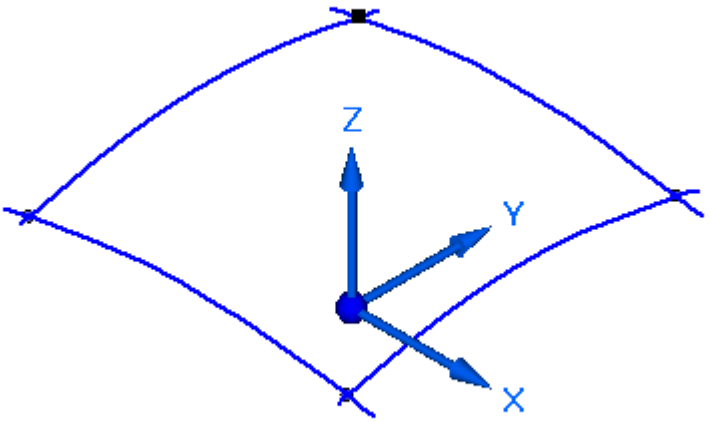

The following illustration shows possible selections from the 3D triad.

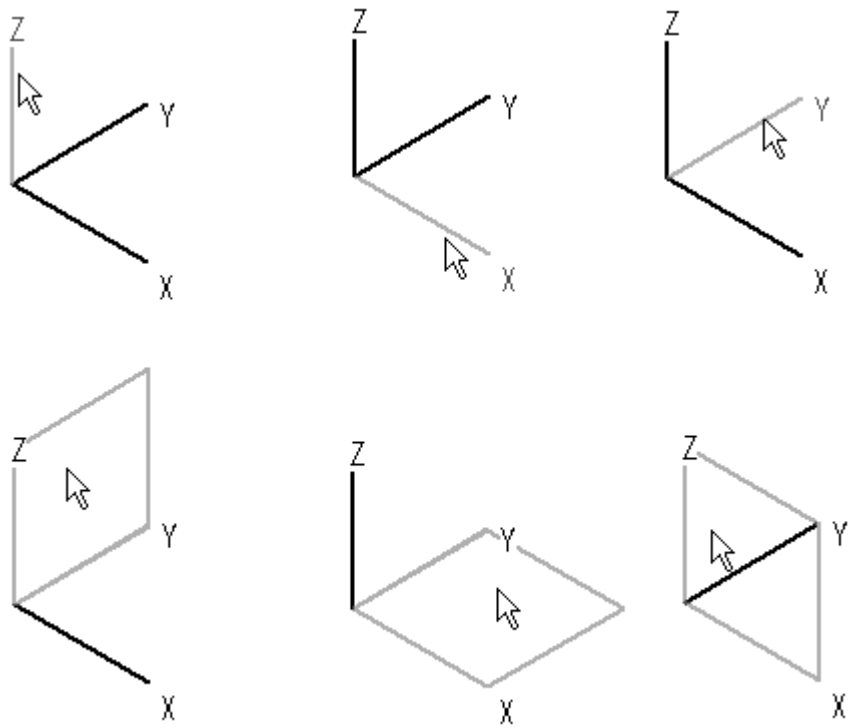

Note

You can also lock to an axis by pressing Z until the preferred axis highlights. Lock to a plane by pressing X until the preferred plane highlights. Press C to clear all locks.

- To move a BlueDot a specified distance, on the ribbon bar click the Relative/Absolute Position button.

Selecting a direction on the 3D triad controls the focus of the delta fields (dX, dY, dZ) on the command bar. For example, if you select the Z-axis, you can only enter a Z delta distance. Press “Enter” to apply the delta distance. Another “Enter” applies the delta distance again.

Step 4: You can set the shape control of the two curves connected to the BlueDot on the command bar.

Step 5: You can turn off display of BlueDots: right-click in the part window and choose Hide All® BlueDots

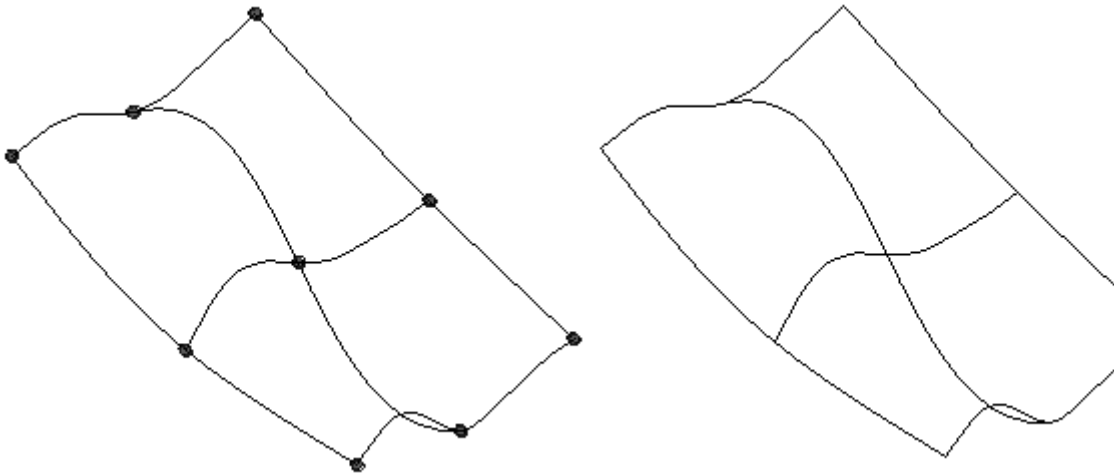

Note

To show BlueDots, right-click and select Show All® BlueDots

Activity: Creating and editing BlueDots

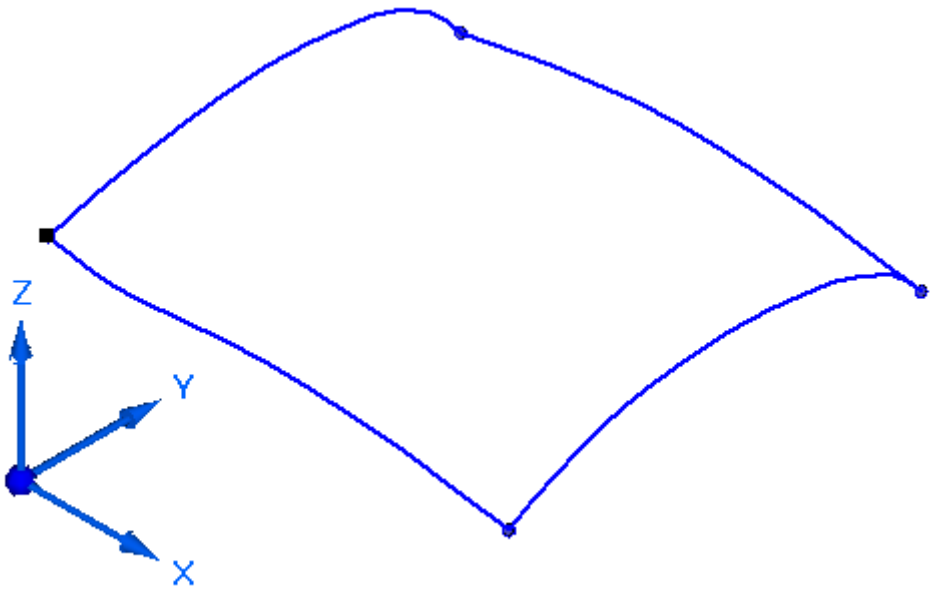

Overview

In this activity you will learn to manually create and edit BlueDots..

Objectives

After completing this activity you will be able to:

- Create BlueDots
- Edit BlueDots and curves based on them

Turn to Appendix Bfor the activity.

Lesson review

Answer the following questions:

- What is an edit point on a curve?
- What is a control point on a curve?
- What is a control polygon?
- Explain the differences in Shape Edit, Local Edit and Rigid. Define the degree of a curve.
- How do you change the degree of a curve?
- Explain what a BlueDot is and what impact it has on curves.
- How do you convert analytics to B-splines?
- What is the Curvature Comb used for?

Lesson summary

Surface shapes are directly tied to the curves defining those surfaces. Therefore, the control of curves is crucial in modifying surface topology.

A curve:

- Can be edited by moving its edit points and control points
- Can be further controlled by increasing its degree
- Can be drawn directly by first defining edit points; direct methods include
  - Curve
  - Curve by table
  - Contour curve
- Can be created indirectly from existing curves and surfaces, making them dependent on underlying parent curves and surfaces; as the parent changes, so do the indirect curves; indirect curve methods will be covered in the next chapter.

Lesson

4 *Indirect curve creation techniques*

Objectives

After completing this lesson, you will be able to:

- Use these commands to create curves derived from other geometry:
  - Project curves
  - Intersection curves
  - Cross curves
  - Contour curves
  - Derived curves
  - Split curves
  - Keypoint curves
  - Curve by table
- Define and edit pierce and silhouette points.
- Draw curves overtop of a raster image.

Additional curve creation methods

Project curve

The **Project Curve** command projects a set of curves (2D or 3D) or a point onto a surface or set of surfaces.

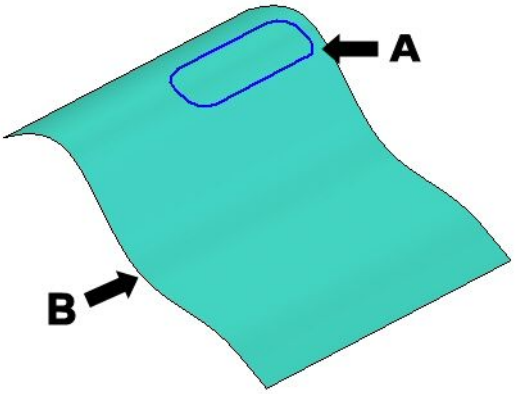

(A) Projection curve

(B) Surface to be projected on to

Choose *Options* on the Project command bar to project the curve along a vector or along surface normals.

The following illustrations show the results of options: “Along vector” and “Normal to selected surface”.

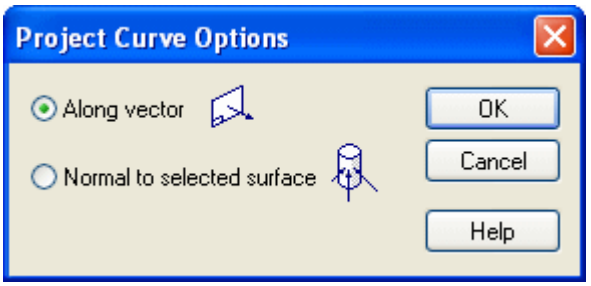

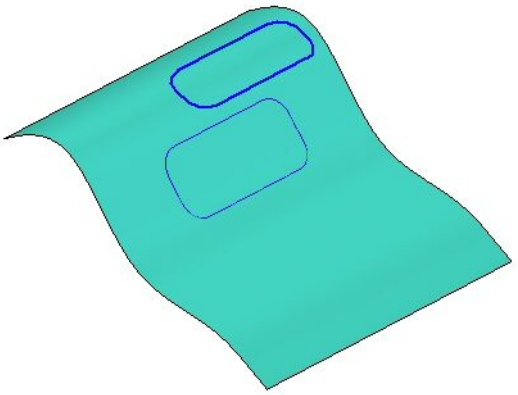

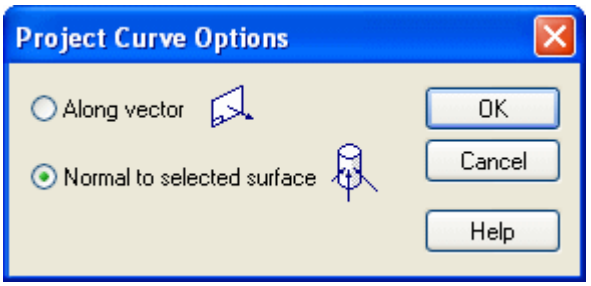

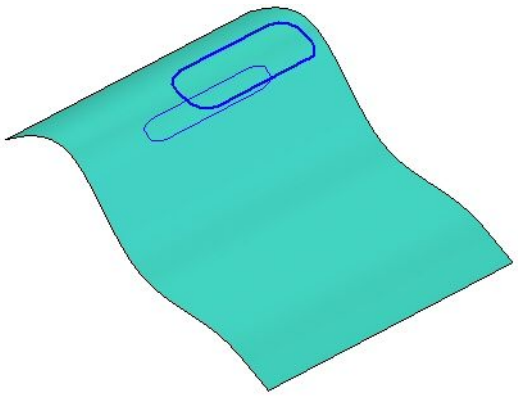

Note

When projecting a curve onto a cylinder, make sure that the curve's endpoints do not lie on a silhouette edge of the cylinder when viewed from the projection plane normal. Extend the edges of the curve past the cylinder edge.

Intersection Curve

The **Intersection Curve** command creates an associative curve at the intersection of two sets of surfaces. These sets can be any combination of reference planes, model faces, or construction surfaces.

- The resulting intersection curve is associative to the two input surfaces.
- Editing the input surfaces will result in an automatic change to the intersection curve.
- The intersection curve (A) can be used for a surface trimming operation or an edge to be used to create a new construction surface.

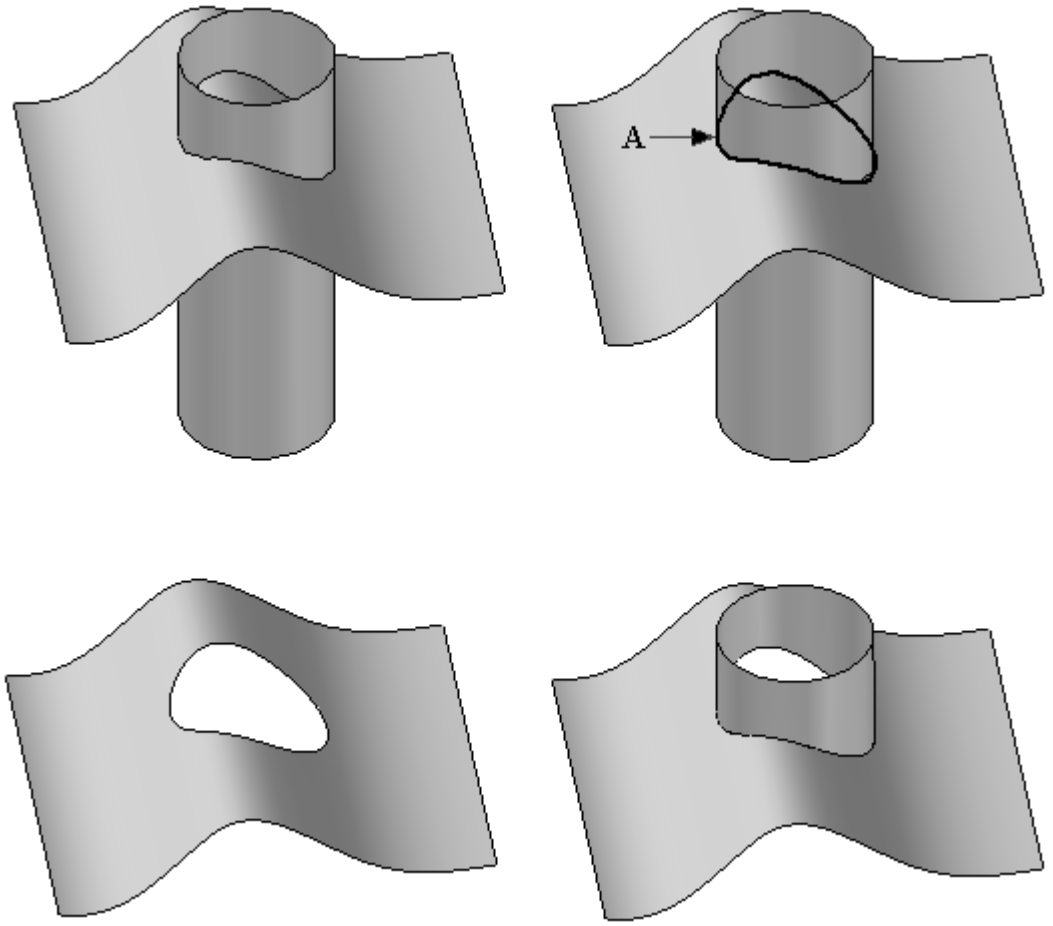

Cross Curve

The **Cross Curve** command creates a 3D curve at the intersection of two curves.

- The command works much like the Intersection Curve command, yet it does not need existing surfaces to create a curve.
- The only input required is two curves/analytics or a combination of the two.
- An intersection curve is created with the theoretical extruded surfaces resulting from the two input curves or analytics.

(1) and (2) are the input curves. (A) and (B) are the theoretical extruded surfaces. (C) is the resultant cross curve.

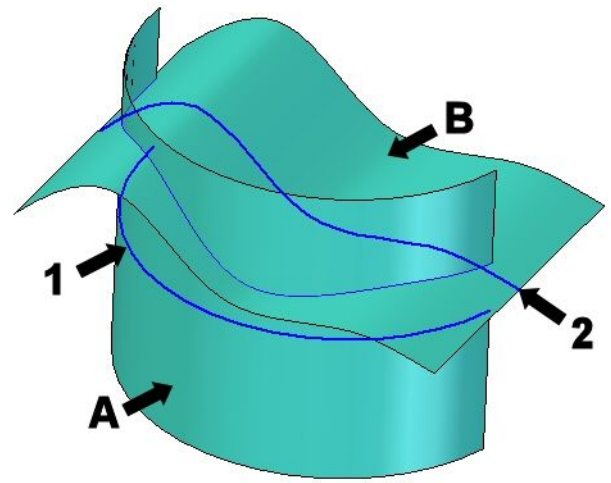

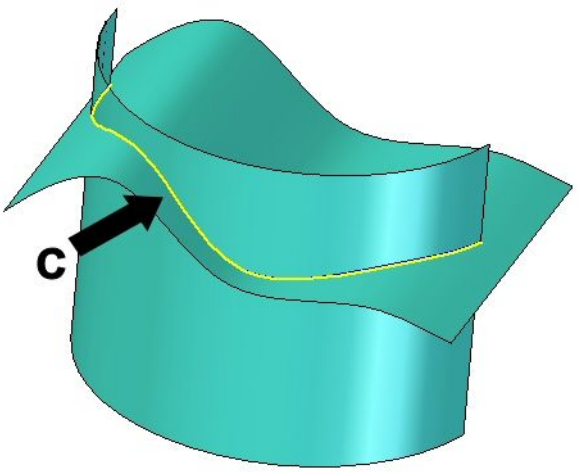

Contour Curve

The**Contour Curve** command draws a curve directly on a surface. You can then use the curve for such things as a border in trimming operations or as a tangent hold line in rounding operations.

- You can select a single face or multiple faces when drawing the curve.
- You can only draw within the bounded region and the curve will only lie within the bounded region. Curves that fall off the surface or traverse trimmed regions are trimmed.
- When defining the points for the curve, you can use existing points that define the surface, such as vertices, line midpoints, and edges of the surface.
- You can drag the points (and thus the curve) anywhere on the surface.

Tips for creation and manipulation of contour curves.

- Choose Contour command bar® Draw Points step® *Insert Point* to insert additional points into the curve. To delete a point from the curve, hold the SHIFT button and click on the point or click the right mouse button on the point.

- You can connect a keypoint and an existing keypoint. To do this, right-click the existing keypoint and select *Connect*; follow the prompts to identify the other keypoint.
- You can delete the connect relationships on a keypoint so that you can drag the keypoint on a face. To delete the relationship, right click the relationship and follow the prompts.
- You can drag an existing point to a new location on the face.
- When drawing a curve across faces that are not tangent, you must place a point at the shared edge.

Derived Curve

The **Derived Curve** command constructs a new curve that is derived from one or more input curves or edges.

- If the input curves are connected, but not tangent, the output curve will have a minimal amount of curvature added so that a single, smooth spline curve is constructed.

  Note

  A derived curve is associative to the edge/curve it was derived from. Changes to the parent curve/edge also changes the derived curve.

  You can construct a single derived curve from multiple bodies. In the example shown below, you can construct a derived curve from a sketch (A), edges on a construction surface (B), and edges on a solid (C).

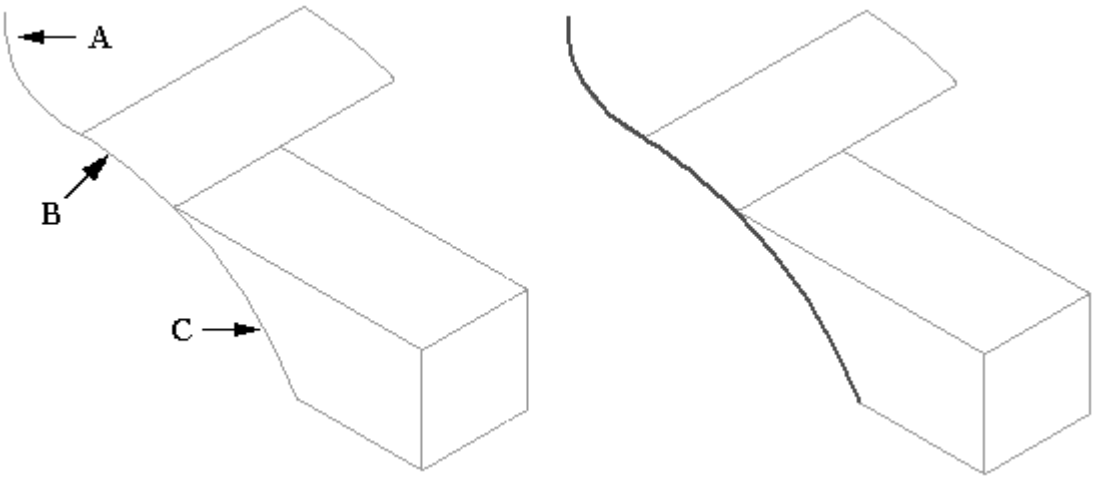

- The Derived curve command bar provides further assistance.

Command bar options

– If multiple edges or curves are needed to define a single derived curve, select each curve/edge and then on the ribbon bar, click the Accept button.

– To create a derived curve from a single edge/curve, select the curve/edge and then click the Accept button.

– Choose*Single Curve* to construct a single spline curve from tangent input curves or edges connected at their endpoints.

Split Curve

The **Split Curve** command is a tool provided to split a construction curve.

- Only these types of construction curves can be split:
  - Derived curves.
  - Intersection curves.
  - Projected curves.

You can select keypoints, curves, reference planes, solid faces or surfaces as the intersecting features that split the curve.

Splitting a construction curve can make it easier to construct other features, such as a bounded surface, a trimmed surface, a normal protrusion, or a normal cutout.

Note

You cannot use the Split Curve command to split an edge on a model. You can use the Derived Curve command to create an associative copy of an edge on the model, and then use the Split Curve command to split the derived curve.

Keypoint Curve

A **Keypoint Curve** is a 3D curve whose shape is controlled by keypoints on wireframe elements, edges, and curves as well as point elements.

- Keypoint curves can be defined by points in space.
- Because keypoint curves are dependent on their parent keypoints or point elements, shape control is performed by moving the points. This is different from the dynamic dragging of a normal curve.

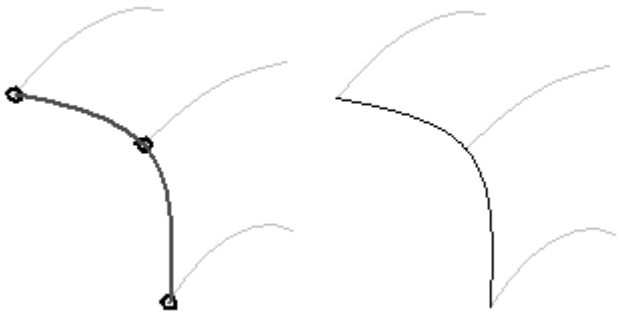

An example of the use of Keypoint Curve is shown below. You can use this command to create a bridge curve (A), which can be used as a path for a swept feature (B).

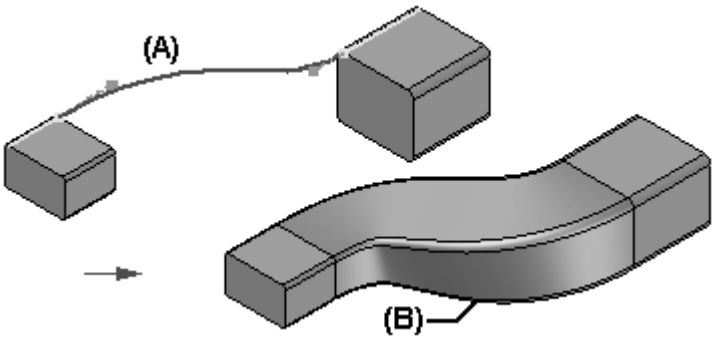

- When you select a keypoint on a wireframe element or edge as the endpoint (C) of the curve, the curve is created tangent to that element.
- The curve's radius of curvature can be modified by dragging the curve handle (D) to a new location.
- If the modified curve was used as a path for a swept feature, the swept feature will also update.

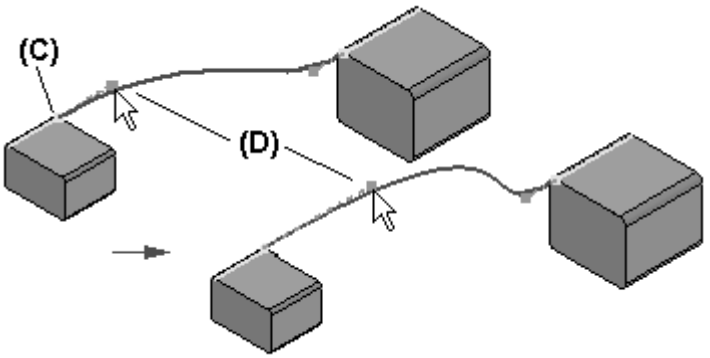

Inserting points on a curve.

During edit, you can add new points along a curve or add a point in free space to define a new segment at the end of the curve.

- To add a point along a path, hold the ALT key and click the location along the curve where you want to add the point.
- To define a new segment at the end, hold the ALT key and click a location in free space where you want to add the point.

Removing points from a curve

Hold the ALT key and click a point you want to remove.

- When you remove edit points, the control vertex points move and the shape of the curve changes.
- If you remove the start or end point of a curve, the path truncates to the next control point on the curve and the tangency of the next point remains the same.

Curve by table

Curve by Table uses an Excel spreadsheet to define a construction curve. The spreadsheet, which is embedded in the Solid Edge document, allows you to better import and manage engineered curves. You have the option to create a new spreadsheet or to use an existing spreadsheet to define the curve edit points.

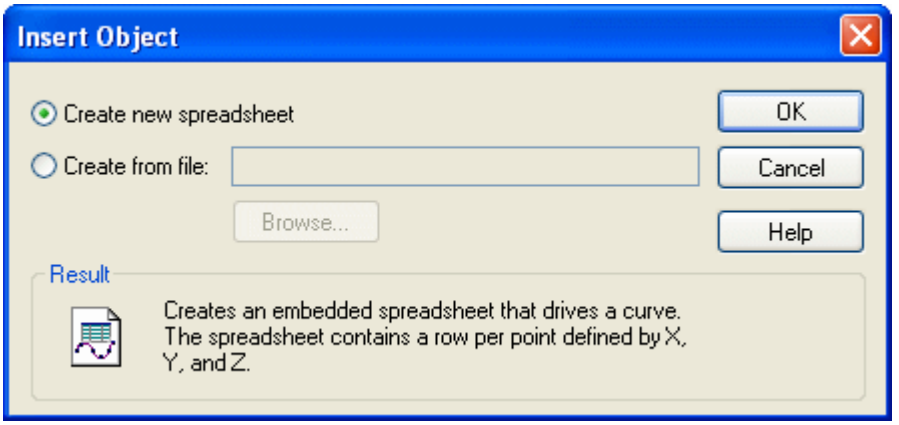

The curve below is the result of data shown in the following spreadsheet and parameters.

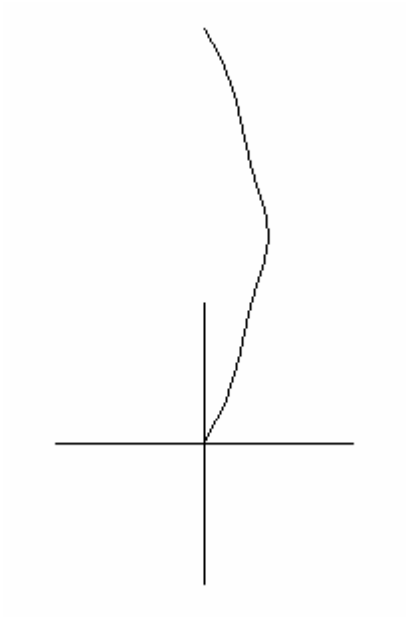

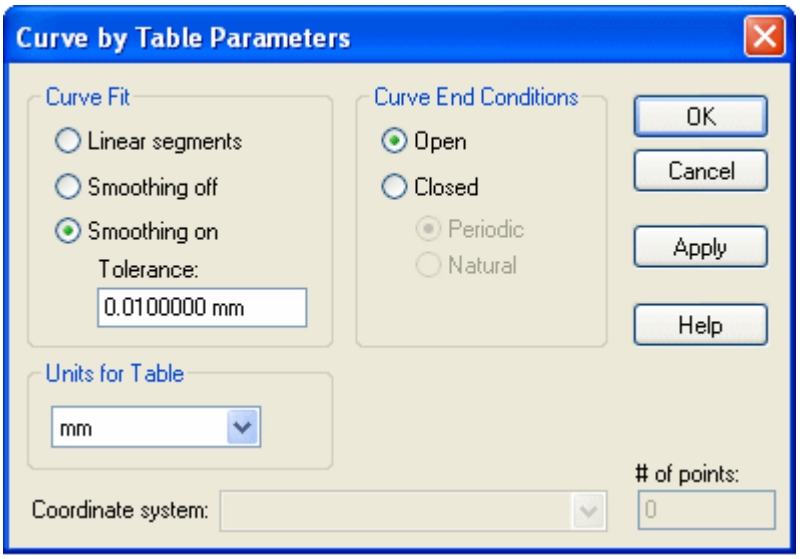

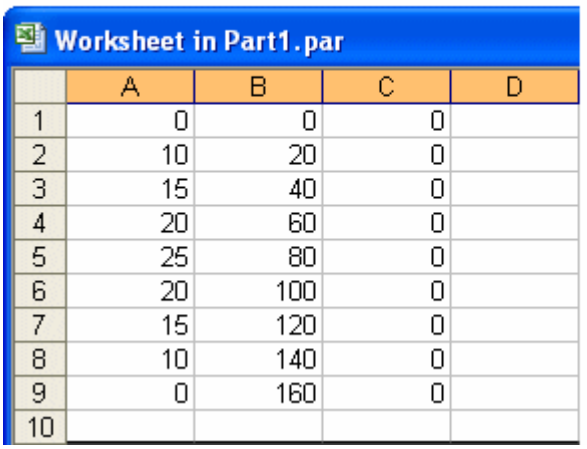

Worksheet in Part1.par

	A	B	C	D
1	0	0	0	
2	10	20	0	
3	15	40	0	
4	20	60	0	
5	25	80	0	
6	20	100	0	
7	15	120	0	
8	10	140	0	
9	0	160	0	
10				

Column A = Global X Coordinate Value

Column B = Global Y Coordinate Value

Column C = Global Z Coordinate Value

Rows 1– N = Curve Points in sequence

Activity: Creating keypoint curves

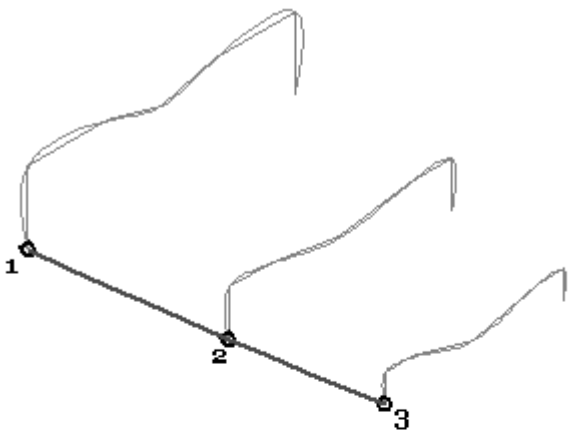

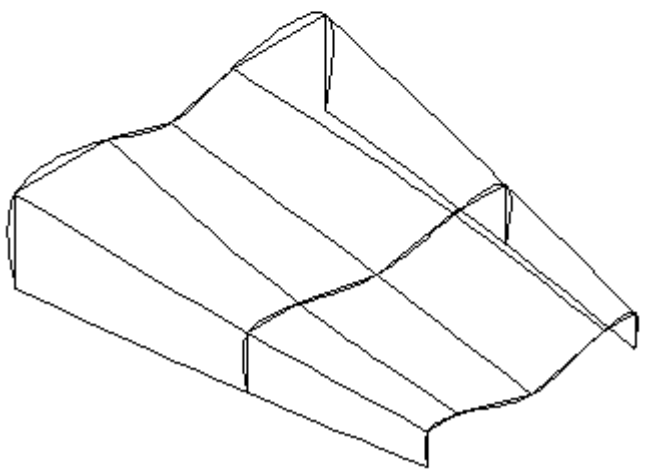

Overview

In this activity, you will learn to create a keypoint curve. A keypoint curve is a 3D curve. The curve is defined by connecting to keypoints from existing geometry.

Objectives

After completing this activity you will be able to:

- Create a keypoint curve
- Modify tangency vectors

Turn to Appendix C for the activity.

Activity: Additional curve creation methods

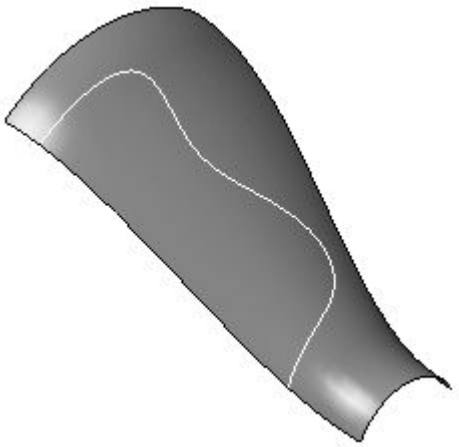

Overview

In this activity, you will learn additional methods of creating curves. So far, you have learned to draw curves directly, point by point. Now you will learn to create curves indirectly, by combining inputs from existing curves and surfaces.

Objectives

After completing this activity you will be able to:

- Intersection curves
- Cross curves
- Projected curves
- Contour curves
- Derived curves
- Split curves

Turn to Appendix D for the activity.

Pierce points

A *pierce point* is the point of intersection between a profile element and the active sketch plane.

Example

You can use a connect relationship to position the element you are drawing to where a profile element on another reference plane pierces the current profile plane.

- Pierce points are extremely valuable in aligning curves.
- Recognizes where a 3D curve, a sketch, or an edge passes through (pierces) the active profile plane.
- Provides the ability to connect geometry to curves intersecting the profile's plane.
- Particularly useful for creating guide paths for BlueSurf and Sweep operations.

Silhouette points

Silhouette points occur on an arc, circle or ellipse.

Example

when you draw a new line, you can touch the silhouette point on a circle. When you click, the new line is connected to the silhouette point on the existing circle.

- These points are defined relative to the horizontal and vertical axis of the draft sheet or profile/sketch plane.
- constitute any point where a plane parallel to the base reference plane passes tangent to a given curve.
- You are able to connect dimensions to these keypoints.
- Silhouette keypoint acts like an endpoint.

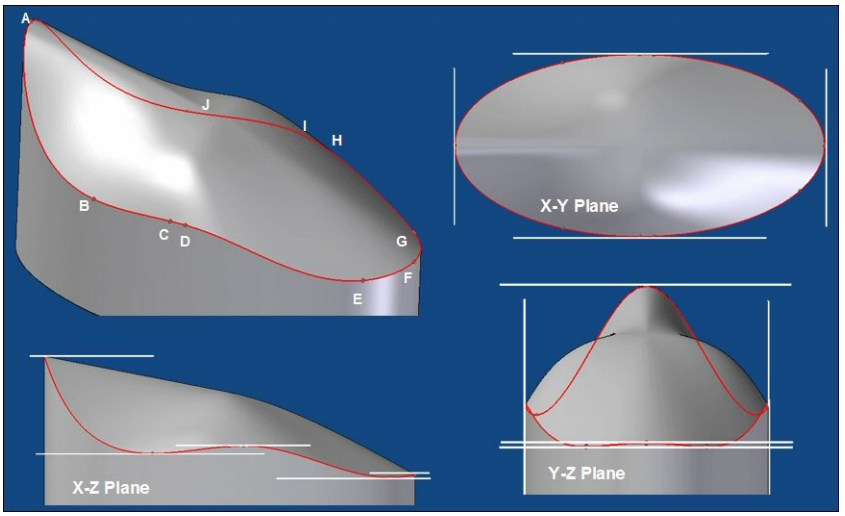

Image

The **Image** command enables the capability to place a raster image (BMP, JPG, TIF, etc.) on a plane for sketch trace-over.

Note

For Ordered modeling, Image is available while in the Sketch environment.

Step 1: Ordered: While in the Sketch environment, select Tools tab® Insert group® Image.

Synchronous: Select Sketching tab® Insert group® Image.

Step 2: From the Insert Image dialog, browse to the image.

Step 3: Image file can be linked to the part or assembly file if option is checked (i.e. appears in the Binder).

Step 4: The Image ribbon bar allows you to set the vertical or horizontal size, as well as change the rotation angle.

Step 5: You can then move the picture and/or constrain the image relative to other geometry or reference planes.

Points, curves (and surfaces) as construction elements

For some model types, you may not use the solid modeling commands until very late in the modeling process. Complex, freeform parts often require that you begin the modeling process by defining points and curves that are used to define and control the surfaces that comprise the model. Surfaces are then generated, and in the final steps, the surfaces are stitched together to form a solid model.

- These construction element types can be created from within both Part-Sheet Metal and Profile-Sketch environments:
  - Points
  - Curves
  - Surfaces

Construction elements that drive other features have a parent-child relationship with the features they drive. If you delete a construction element that is a parent to another feature, you can invalidate the other feature.

Displaying construction elements

- Choose View tab® Show group® Construction Display to control display.

Note

When hidden, a construction element's entry in PathFinder changes to indicate that it is hidden.

- Construction elements are listed in the Feature PathFinder.
- Color control is available for construction elements.
  - Tools® Color Manager
  - Colors tab on the Options dialog box.
- Specific display considerations:
  - Construction elements used to create new features are not consumed by the new feature, and are hidden by default.
  - It can be useful to hide the design body while you are working with construction surfaces. Under Tools® Show All, use either the Show Design Body or Hide Design Body commands.

Methods of creating construction elements

- Use existing geometry on the model. Intersection curves, Keypoint curves, Derived curves, Project curves, Split curves, and relevant point creation commands can be used.
- Create construction elements from scratch using the Solid Edge construction surface creation commands (extruded, revolved, and swept surfaces).

- Use Curve By Table to generate a curve based on input points.
- Use an external file. For example, you can create a helix curve using coordinate data in a spreadsheet.
- Import them from another CAD system. For example, you can import surfaces and solids from a third-party CAD system.
- Generate them as a part copy from another Solid Edge part. For example, you can create construction geometry using the Part Copy command on the Insert menu.

Using construction elements

- Points can be used in several ways:
  - To create other features
    - ◊ use a construction point or curve as a path or cross section for lofted and swept features.
    - ◊ use the Intersection Point command to create cross sections for lofted features.
  - To define the extents of another feature
    - ◊ use keypoints of construction curves to define the extent for a feature.
    - ◊ use the Intersection Point command to create associative points as input to define the extents of a feature
- Curves can be used in two distinct ways:
  - Curves can be used to create other features:
    - ◊ Paths and cross sections for lofted and swept features using Intersection curves, Keypoint curves and Derived curves.
    - ◊ Profiles for profile-based features using the Project Curve (useful for creating embossed text on a curved surface) and Split Curve (divide one into multiple curves to create a normal protrusion) commands:
    - ◊ Construction surfaces- the Split curve command can divide one into multiple curves to create a surface by boundary.
  - Use a construction curve as input to the Reference Plane Normal To Curve command.

- Surfaces can be used as well; creation methods will be covered in the following modules. Some general uses of surfaces are:
  - To define the projection extents when extruding a feature: For example, a construction surface can be used as input during the Extent step when constructing a protrusion.
  - To replace existing part faces.
  - To divide a part into multiple parts.
  - To create a new surface or solid by stitching together separate surfaces: use the Offset Surfaces command to offset a new surface
  - To repair a model imported from a third-party CAD system.
  - Construction surfaces are commonly used as projection extents when extruding a feature.

Lesson review

Answer the following questions:

- How do you get tangency control on a keypoint curve?
- Intersection curves are considered to be associative. What does this mean?
- From what types of elements can a Derived Curve be formed?
- Generally, why would you define construction elements (curves and points) as a first step?

Lesson summary

- You can create various curves indirectly from existing curves and surfaces. These curves are controlled by the parent curves and surfaces. As the parents change, so will the indirect curves.
- Surface shapes are directly tied to the curves defining those surfaces. Therefore, the control of curves is crucial in modifying surface topology.
- Pierce and silhouette points can assist in connecting curves to off-plane geometry.

Lesson

5 *Surface creation*

Objectives

After completing this lesson, you will be able to:

- Create simple surfaces.
- Create a BlueSurf.
- Edit a BlueSurf.
- Create a Bounded surface.

Overview of surfaces

A surface is a 3D element that is controlled by curves. Surfaces have no thickness and therefore can be visualized as a thin sheet. The complexity of a surface is directly proportional to the number of curves used to define it – a small underlying curve set will produce a relatively simple surface, while a complex face will consist of a large number of curves. In terms of Solid Edge modeling, a surface consists of cross-sections and guide curves, the latter either pre-existing or interpolated from the cross-section elements.

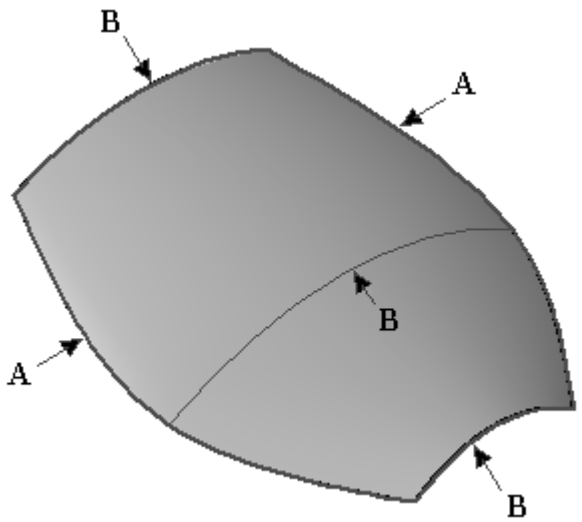

(A) Guide curves

(B) Cross Section curves

Curves form the mathematical basis of a surface. As one increases his/her understanding of how to control curves, his/her mastery of surfaces will grow. Two basic ways curve manipulation will affect an associated surface:

1. Editing underlying cross-sections and guide curves will directly modify surface shape.

2. A surface can be trimmed and extended using curves and edges.

Once its shape is finalized, a surface can be utilized in the creation of additional faces via the following commands (covered in Lesson 5):

- Offset
- Copy
- Mirror

A surface can also be stitched together with other faces to form a solid or can include rounds between adjoining surfaces.

Creating a simple surface

Extruded Surface — You will begin the surface creation module with the simplest method: an extruded surface. The only input required is a sketch or profile containing curves or analytic elements. The *Extruded Surface* command works similarly to the Protrusion command.

Extruded Surface creation steps:

Step 1: Select Surfacing tab® Surfaces group® Extruded Surface.

Step 2: Select a profile plane.

Step 3: Draw the cross section. You can use analytics or curves.

Step 4: Select Home tab® Close group® Close Sketch.

Step 5: Define the extruded distance dynamically or with a value on the command bar. The symmetric and non-symmetric extent options are available.

Step 6: Select Finish on the Extruded command bar.

Note

You can create a sketch to draw the cross-section. Use the *Select from Sketch* option to create an extruded surface from an existing sketch.

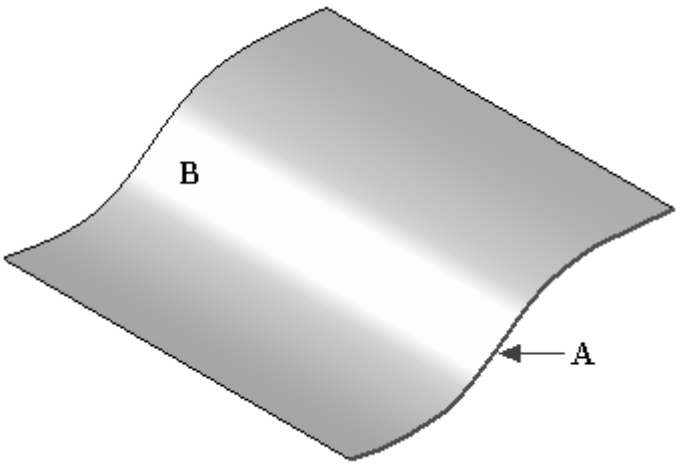

(A) profile/sketch

(B) extruded surface

Revolved Surface — The next simple surface creation method is a revolved surface. The only input required is a sketch or profile containing curves or analytic elements and an axis of revolution. The *Revolved Surface* command works similarly to the Revolved Protrusion command .

Revolved Surface creation steps:

Step 1: Select Surfacing tab® Surfaces group® Revolved Surface.

Step 2: Select a profile plane.

Step 3: Draw the cross section. The cross-section can be open or closed. You can use analytics or curves.

Step 4: Define the Axis of Revolution. You can select a reference plane for the axis or select a line drawn in the profile as the axis of revolution.

Step 5: Select Home tab® Close group® Close Sketch.

Step 6: On the ribbon bar, enter a revolved angle or dynamically drag the revolved surface to an angular distance. The symmetric, non-symmetric and 360° extent options are available.

Step 7: Select Finish on the Revolved command bar.

Note

You can draw the cross section and axis of revolution in a sketch. Use the Select from Sketch option to create a revolved surface from a sketch.

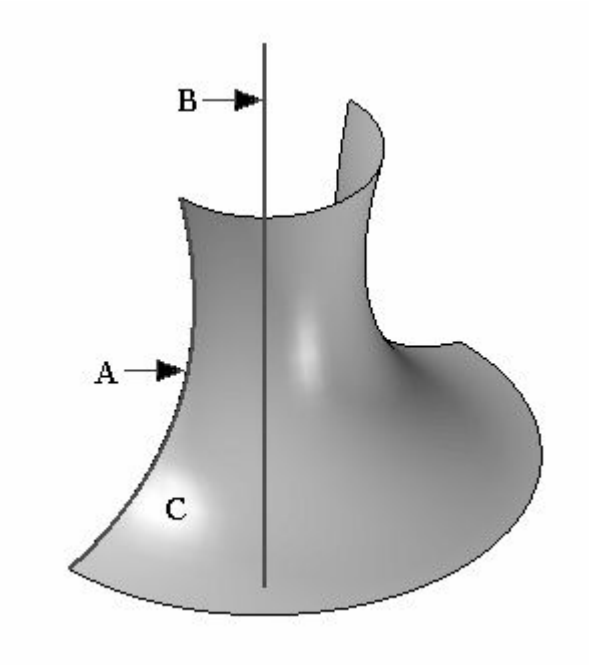

(A) profile/sketch

(B) axis of revolution

(C) revolved surface

Activity: Creating and editing simple surfaces

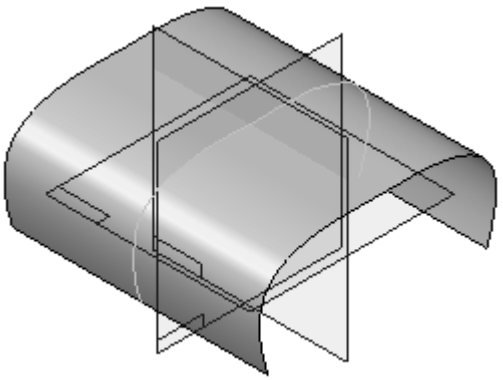

In this activity, you will learn to create and edit simple surfaces. You will use sketches in a training file to create an extruded surface and a revolved surface. After completing the surface, you will edit the sketch curve to observe the surface shape changes.

Objectives

After completing this activity you will be able to:

- Create and edit an extruded surface.
- Create and edit a revolved surface.

Turn to Appendix E for the activity.

Using simple surfaces as construction surfaces

Simple construction surfaces — Besides representing a very simple method of creating needed faces, the extruded and revolved surface commands can be used to build construction surfaces necessary in the generation of intersection curves with other faces. In this situation, the surfaces can be hidden after the operation is complete; this is preferred to deletion of the faces since they are parents of the intersection curves.

Construction surface deletion — If deletion of a surface is required, and that face has children (the intersection curve, possibly others), the **Drop Parents** command will permit the curves to remain after the surface is removed. However, those curves are no longer associated, and cannot be edited. Therefore, caution is advised when using Drop Parents.

To hide the display of surfaces, right-click in the part window and choose Hide All® Surfaces.

Sketch Tear-Off

Typical surface design is by creating several curves on three base planes. As new planes are created, adding and copying profiles can be tedious, if not impossible. **Sketch Tear-Off** provides a clear modeling advantage in that it:

- Transfers or copies sketches from one plane onto another.
- Quickly creates new cross sections without having to define a plane, and include geometry.
- Replicates sketches quickly for use in swept or lofted protrusions.
- Creates new sketches which are parallel or perpendicular, along curves, angular associative, copied or moved.

Sketch Tear Off steps

Step 1: Select Home tab® Sketch group® Tear-Off.

Step 2: In the Plane Step, select a method for creating a plane.

Step 3: Select the Tear-Off options. Choose *Copy elements (Associative)*.

Step 4: Select profile or profiles.

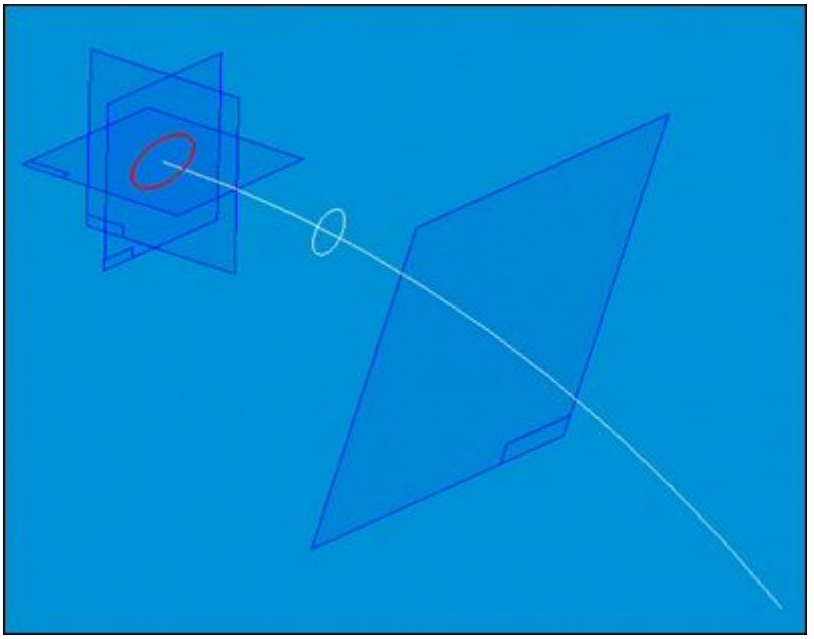

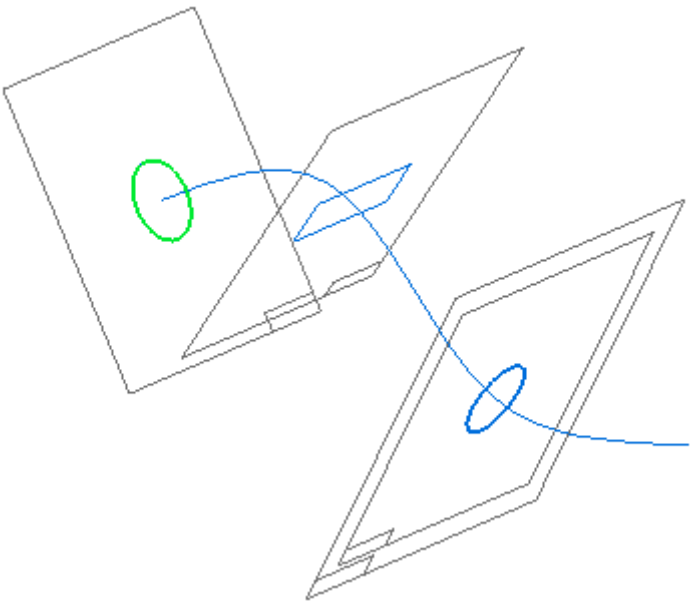

Creating a swept surface

The **Swept** command creates a construction surface by extruding a profile along a path.

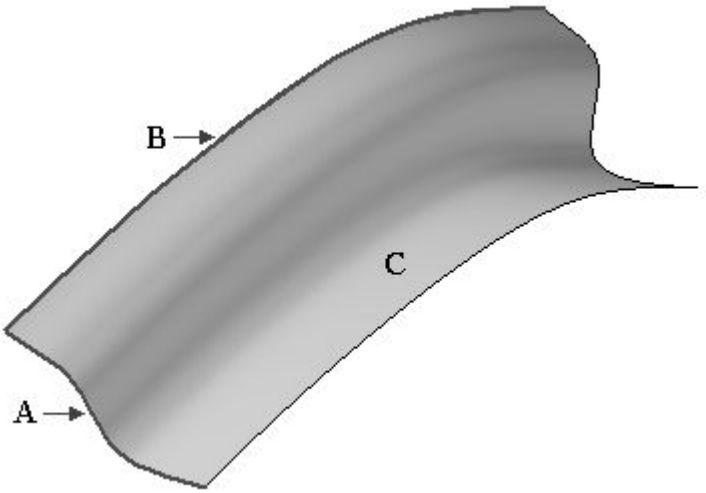

An example of a swept surface using a single path and cross-section

(A) profile/sketch

(B) guide path

(C) swept surface

Swept surface steps

Step 1: Select Surfacing tab® Surfaces group® Swept.

Step 2: Choose the appropriate Swept surface options and click OK.

Step 3: Select the path curve(s).

Step 4: Select Next on the Swept command bar.

Step 5: Select the cross section curve(s).

Step 6: Choose Finish on the Swept command bar.

Sweep options — You must specify the Sweep Options before the command begins.

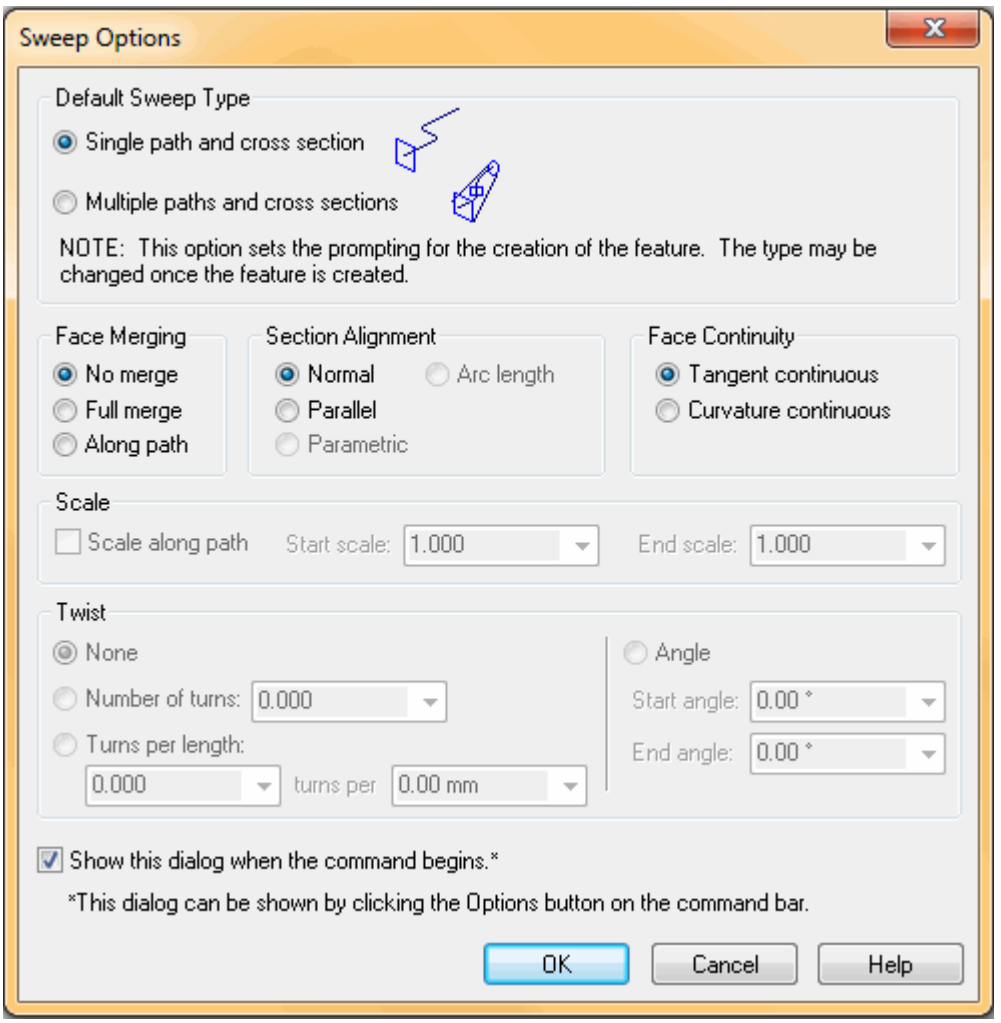

The *single path and cross-section* option allows you to only define one path and one cross section.

- The path and cross section can be open or closed.

The *multiple paths and cross-sections* option allows you to define up to three paths and an unlimited number of cross sections.

- After you define one or two paths, click the Next button on the ribbon bar to proceed to the cross-section step.
- The cross sections can exist anywhere along the path, be all open or all closed and can be planar or non-planar.
- You cannot mix open and closed cross-sections.
- A sweep path can consist of either tangent or non-tangent elements.

If you define a third path, the command automatically proceeds to the cross-section step.

Additional options — More options exist for Sweep.

When you create a swept surface using a closed profile, you can use the Open Ends and Close Ends options on the Swept command bar to specify whether the ends of the swept surface are open or closed.

When you set the Close Ends option, faces are added to the ends of the feature to create a closed volume.

For cross sections and paths, you can select wireframe elements from multiple Parasolid bodies or sketches and the elements will remain associative.

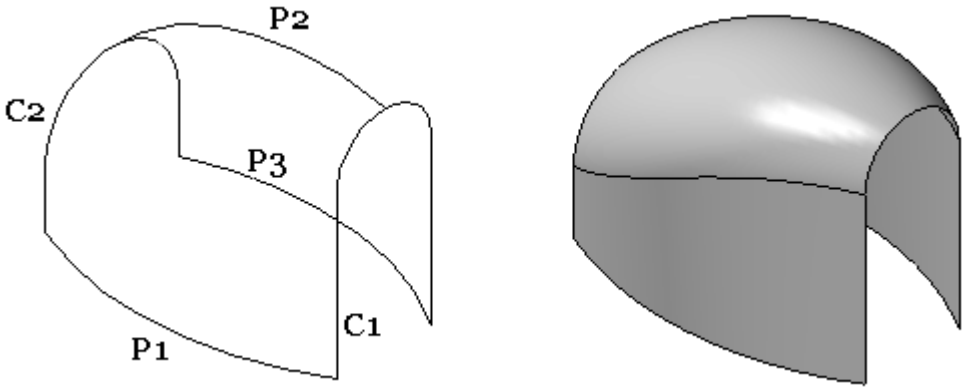

P1, P2, P3	Path curves
C1, C2	Cross sections

Activity: Creating a swept surface

Overview

In this activity, you will learn to create and edit a swept surface. You will use provided sketches to create a swept surface. After completing the surface, you will edit the sketch path and cross sections to observe the surface shape changes.

Objectives

After completing this activity you will be able to create and edit a swept surface.

Turn to Appendix F for the activity.

Creating a lofted surface (ordered modeling)

Lofted surfaces are constructed by extruding two or more cross sections to construct a feature.

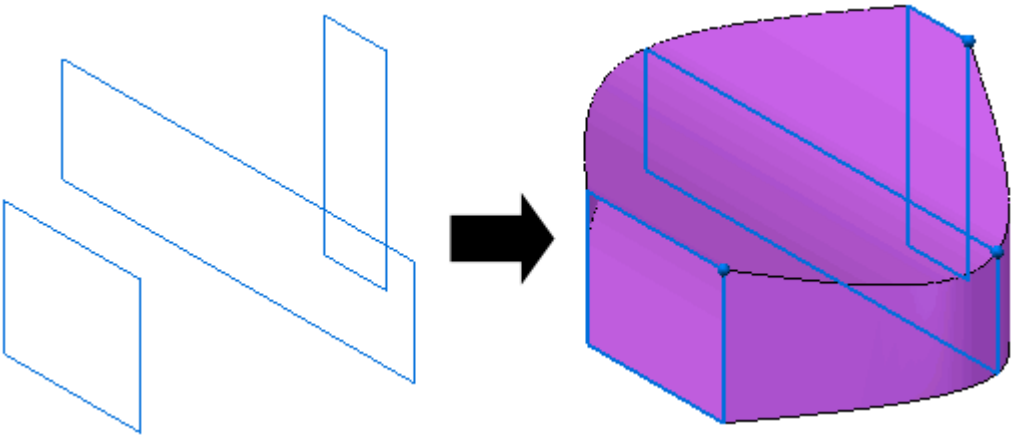

- Cross sections can be defined by drawing a profile, selecting existing sketch elements or selecting edges of surfaces.
- You can also use a guide curve to define a path between the cross sections of the loft.
- The end condition, or Extent, options allow you to control the shape of the loft feature where it meets the first and last cross sections.
- The loft feature is associative to the input elements, regardless of the element type you use to define the cross sections and guide curves.

While in Ordered modeling, the *Lofted Surface* icon may need to be added to the command ribbon.

Use **Customize the Ribbon** to add this command.

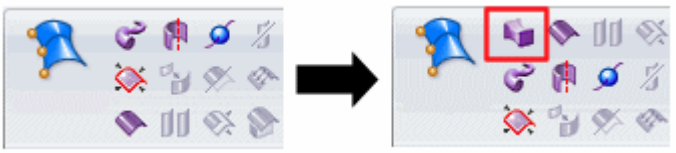

Note

Search Solid Edge help for the phrase “Customize the command ribbon” to learn more about including any missing command, such as lofted surface.

- Select the *Choose commands from:* list.
- Choose *Commands Not in the Ribbon*.
- Select **Lofted Surface** from this list.

Because loft features are often used to define aesthetic elements in a model, you may want to experiment with different settings to achieve the results you want.

Note

Tips

- If you use sketches, you can only select elements from one sketch for each cross section.
- You cannot combine elements from a sketch with edges to define a cross section.
- When working with loft features that have many cross sections and guide curves, you should consider drawing sketches first, rather than drawing the profiles as you construct the feature. This approach can make it easier to construct and edit the feature.

Lofted Surface creation steps

Step 1: Select Lofted Surface.

Step 2: On the Lofted command bar, select a method for creating the first cross section—you can draw a path, select from a sketch, or select part edges. Do one of the following:

- If you are drawing a cross section, define the profile plane you want to draw it on, then draw a cross section or copy a cross section into the profile window.
- If you are using part edges to define the cross section, select the edge or edges you want to use and then click the Accept (check mark) button on the ribbon bar.
- If you are using a sketch to define the cross section, select the sketch you want to use, then click the Accept (check mark) button on the ribbon bar.

Step 3: Position the cursor near the vertex you want to use as the start point. Click when a dot appears at the correct vertex .

Step 4: Continue to select all the cross sections you need.

Note

You must define at least two cross sections to create the lofted feature.

Step 5: Right-click when all cross sections are selected.

Step 6: Optional: Define the guide curves.

Step 7: Optional: Define the extent.

Note

Rather than selecting a finite or closed extent, you can click the Vertex Mapping button to map points on the cross section to control the loft.

You can define closed or open end conditions for the ends of the lofted feature.

Step 8: Select Finish.

Bounded Surface

The Bounded Surface command creates a surface between curves or edges. This command is useful when you want to fill in gaps between other adjacent surfaces.

- The curve/edge set must form a closed loop.
- Adjacent faces can be used to control tangency on the new bounded surface.
- The preparation of edges/curves to be utilized may require the use of the derived curve and split curve commands.
- The keypoint curve command can be used to generate a boundary curve.

In the following example, a bounded surface is used to place a patching face over the open area (gap) A.

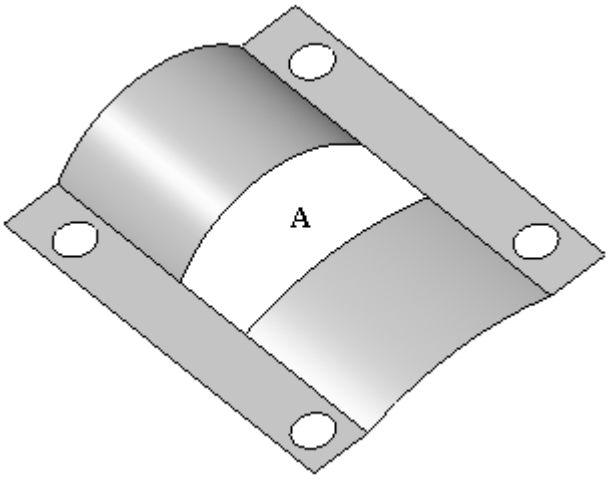

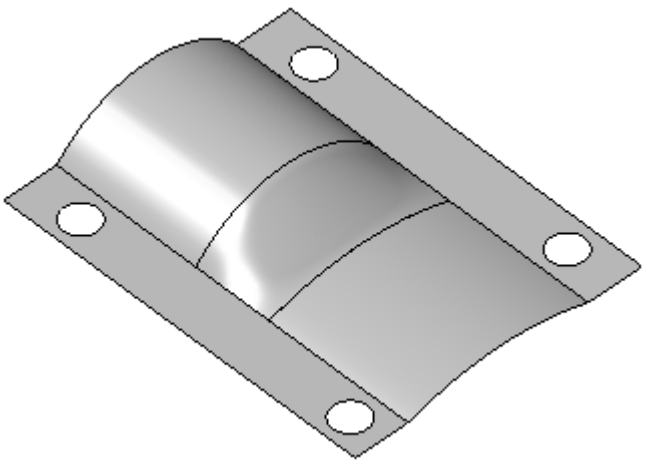

Bounded surface steps

Step 1: Select Surfacing tab® Surfaces group® Bounded.

Step 2: Select four edges or curves and click Accept.

Step 3: If using edges, their corresponding faces can be used as tangent faces. If you do not want the bounded surface to be tangent to these faces, just click on them to remove them from the tangency set.

Step 4: Select Preview on the Bounded command bar.

Step 5: Choose Finish on the Bounded command bar.

BlueSurf

Note

Please refer to the Help topics *BlueSurf command* and *BlueSurf Options Dialog Box* for more detailed information.

BlueSurf is a surface creation command used to generate complex, but highly editable surfaces. Like loft and sweep, a BlueSurf utilizes sections and guide curves, and these parent curves drive the behavior of the resultant surface. Several techniques can be applied to further edit a BlueSurf.

- New section and/or guides can be incorporated, providing additional control over the BlueSurf topology.
- As sections and/or guides are added, the number of edit points can be increased or reduced through the concept called Edit Point Data Management.
- BlueDot edit points can be moved in order to manipulate the surface; both Shape and Local Edits are available.

Blue Surf Options

The *BlueSurf Options* gives you control over tangency, end capping, open vs. closed extents and vertex mapping.

On the *Standard* tab, there are options to control tangency for cross-sections and edge guides. The default setting for cross-section tangency is natural. The following example shows the results from a natural (A) and normal to section (B) tangency control setting.

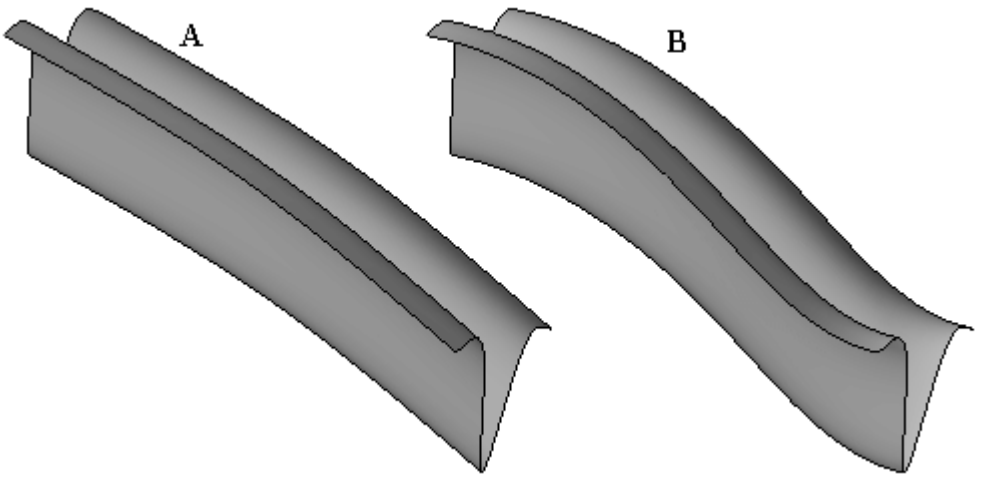

The Edge Guide option specifies the tangency control for the guide curves.

The End Capping option is available when you use closed cross sections. The default option is Open, although you can specify the Close ends option to create a closed volume. The following example shows Open ends (A) and Closed ends (B) results.

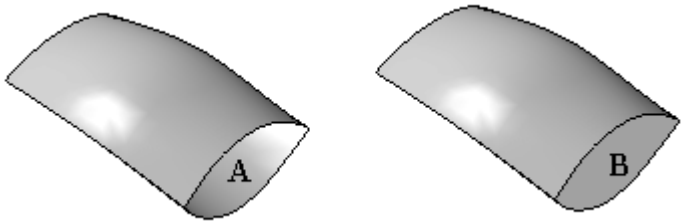

The Extent Type control allows Open or Closed extents. Open extent creates a surface that starts at the first cross-section and ends at the last cross section. A closed extent starts and ends at the first cross section, to form a closed loop. The following example shows the two extents: (A) Open, (B) Closed.

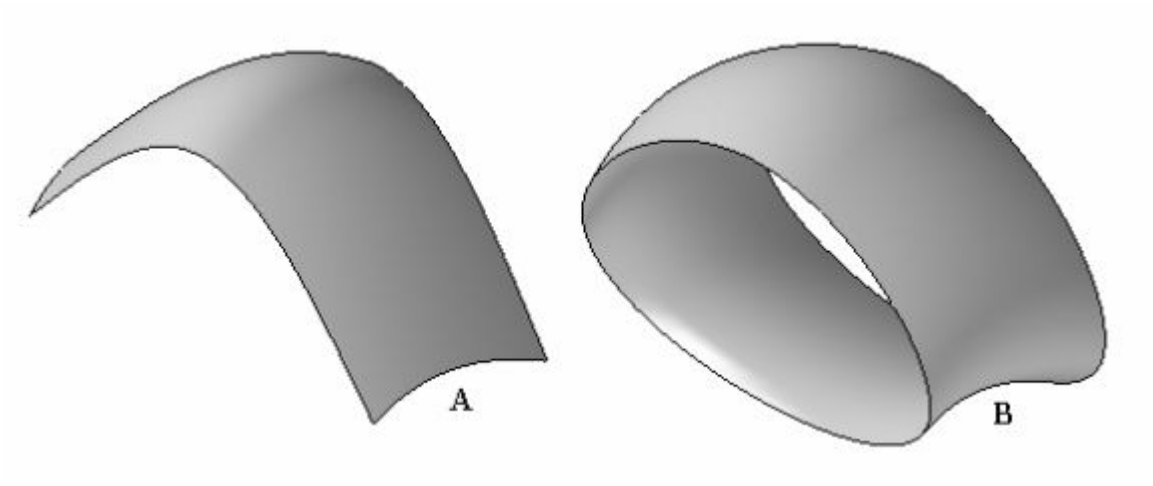

The Curve Connectivity option applies to inserted sketches. You will learn about inserting sketches later in this lesson. The inserted sketches can be either connected with pierce points or with BlueDots.

The *Advanced* tab lets you apply vertex mapping. This is covered later in this lesson.

Working with Blue Surf

The first step in creating a BlueSurf is selecting cross sections. The Cross Section Step activates automatically. At least two cross sections are required.

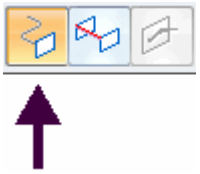

Next you can select guide curves if needed. Click the Guide Curve Step and select the guide curve(s).

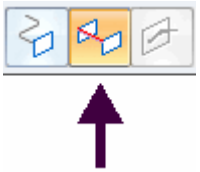

Click Preview and then Finish.

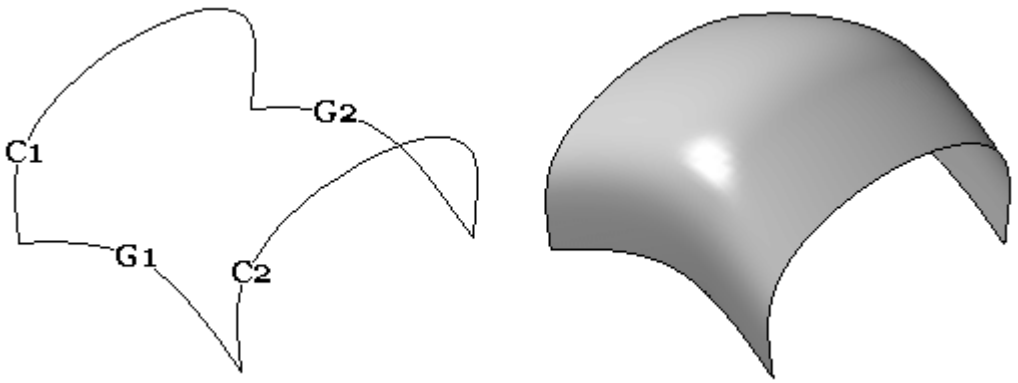

This example shows the BlueSurf result of two cross-sections (C1, C2) and two guide curves (G1, G2).

A BlueSurf can also consist of a single cross-section and a single guide curve.

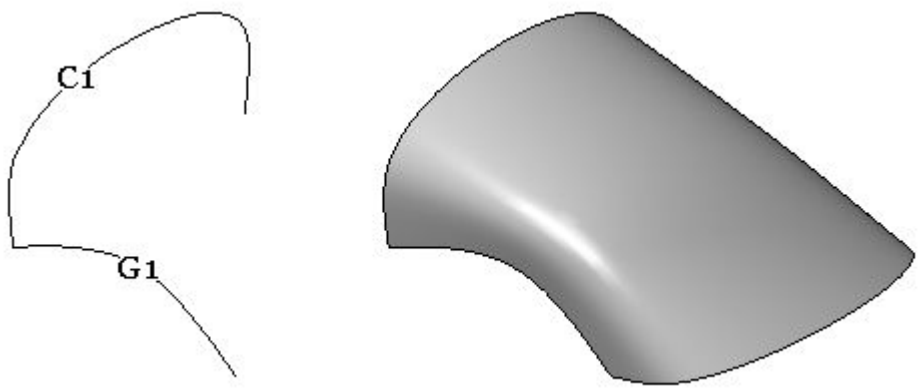

This example shows the BlueSurf result of using cross-section (C1) and guide curve (G1) from the previous example.

At this point, editing any of the cross-sections or guide curves modifies the shape of the BlueSurf. If you need additional surface shape control, the BlueSurf command provides a step to insert additional sketches.

Inserting sketches

When you add a cross section or guide curve to an existing BlueSurf feature using the Insert Sketch option, the new sketch is connected to the cross section(s) or guide curve(s). You can use the BlueSurf Options dialog box to specify whether a connect relationship or a BlueDot is used to connect the sketch to the guide curves. The option you specify also affects how you can edit the feature later.

On the BlueSurf Options dialog box, there are two methods for curve connectivity (Use Pierce Points or Use BlueDots).

Use pierce points

Specifies that a connect relationship is used to connect the cross-section and guide curve where they intersect. The position of the connect relationship is calculated using the Pierce Point option on the IntelliSketch dialog box. When you connect the new sketch using the Use Pierce Points option, modifications to either the cross-section or guide curves will drive an update of the bspline (inserted sketch).

Note

The Use Pierce Points option is typically used when constructing engineered surfaces, such as the surfaces for a fan or turbine blade, where engineering data or dimension-driven criteria must be maintained.

Use BlueDots

Specifies that a BlueDot be used to connect the cross section and guide curve where they intersect. When you connect a cross section and a guide curve with a

BlueDot, you can use the BlueDot as a handle to dynamically modify the shape of the cross-section and guide curve.

Note

- The Use BlueDots option is typically used on models that are driven by aesthetic requirements, such as consumer electronics products, bottle and container design.
- In some cases, using BlueDots can also cause a model to take longer to update, because moving a BlueDot may require more of the model to recompute than a connect relationship would.

Insert Sketch option

You can also define a tolerance value to control the complexity of sketches you insert. As the tolerance value decreases, more control points are added to the inserted sketch curve.

You can select the Insert Sketch Step while in the BlueSurf command.

If the BlueSurf has already been created, you can select the BlueSurf with the Select tool and then click the Edit Definition command on the Select tool command bar.

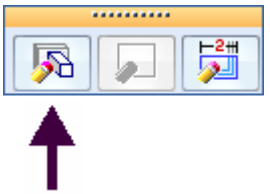

Note

In the following example, the Use BlueDots option is used for curve connectivity.

Inserting a sketch.

Step 1: On the BlueSurf command bar, click the Insert Sketch Step. You must select a plane to insert a sketch on. All of the plane creation methods are available.

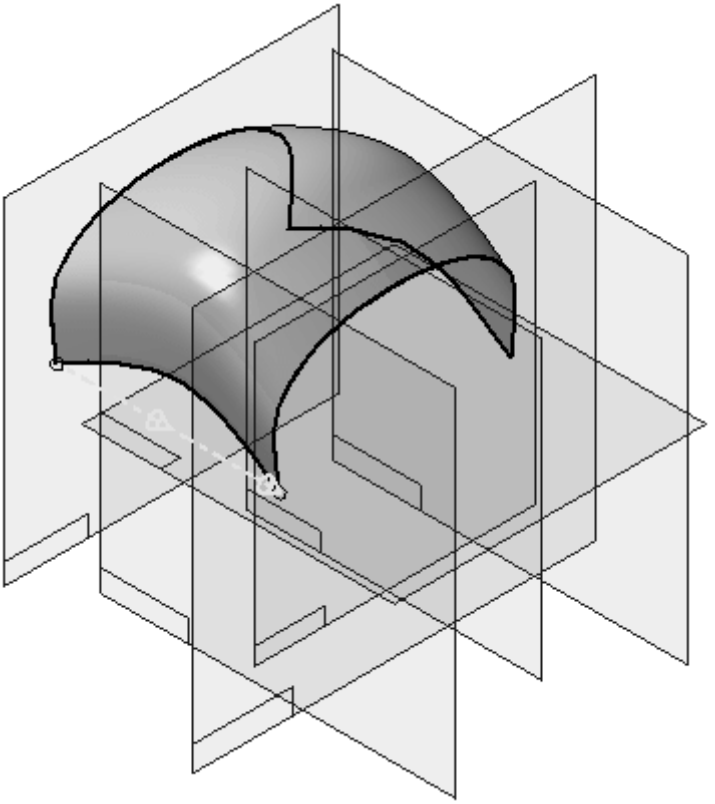

In the following example, the parallel plane option was selected. Reference plane (A) was selected as the plane to be parallel to. Reference plane (B) can be dynamically dragged to the location to insert a sketch. You can also key in a distance. Click location to insert a sketch (C).

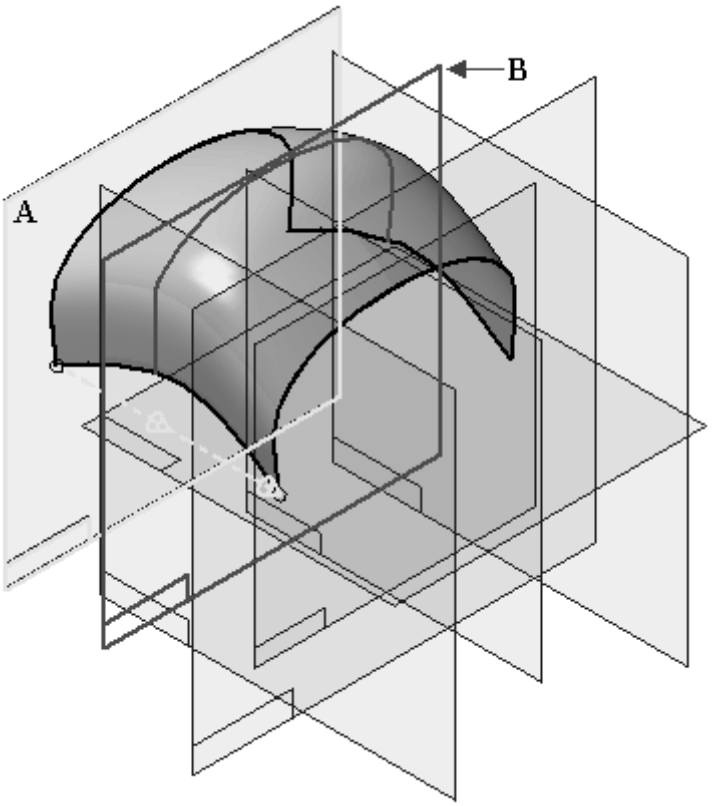

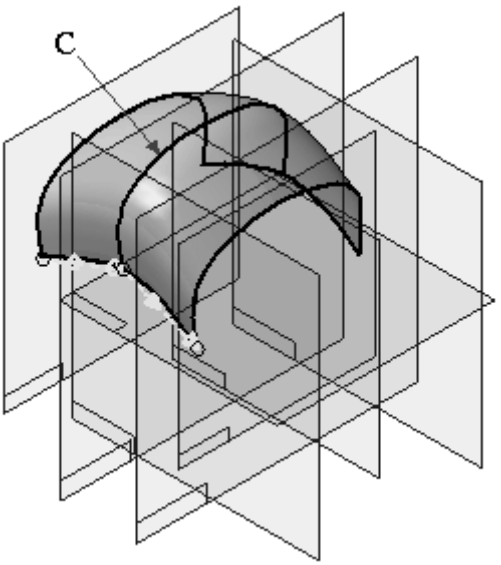

Step 2: Insert a sketch (C) in the guide curve direction and notice the results. The parallel plane is used again.

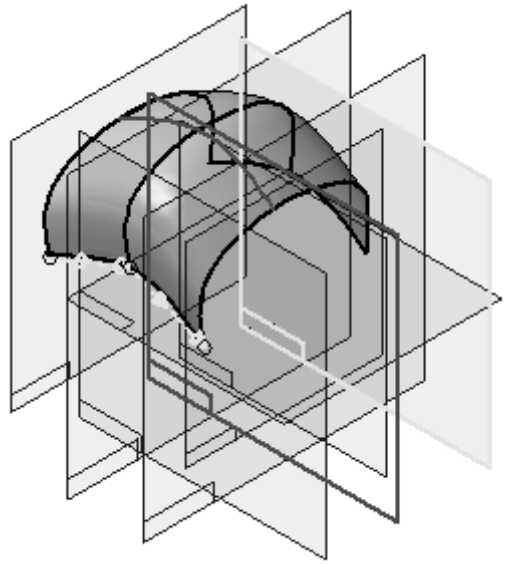

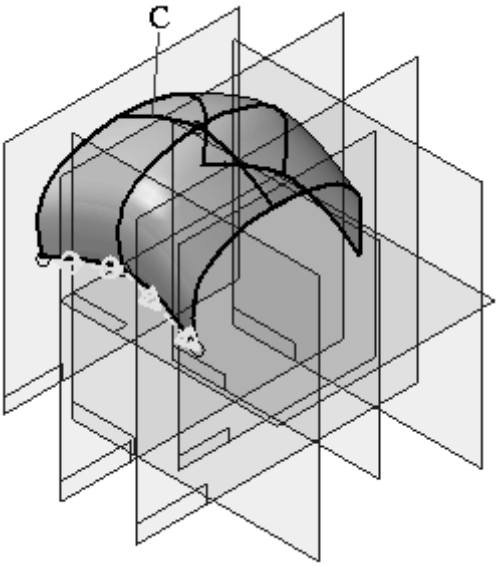

Step 3: Now turn off the reference planes and observe the results.

When the guide curve direction sketch was inserted, it crossed another sketch. The BlueSurf command automatically inserts BlueDots at the intersection of the curves. If there were several sketches in the cross-section direction, the inserted sketch in the guide curve direction would be connected with BlueDots.

Adding cross sections

You can add cross sections to an existing BlueSurf. Unlike Insert Sketch, an added cross section redefines the surface shape definition. Editing an inserted sketch alters the BlueSurf shape.

Any cross section sketch created after the BlueSurf is created will not be seen by the BlueSurf feature. When you edit a BlueSurf, it only recognizes sketches created before it was created.

The BlueSurf feature below was created with two cross sections (C1, C2).

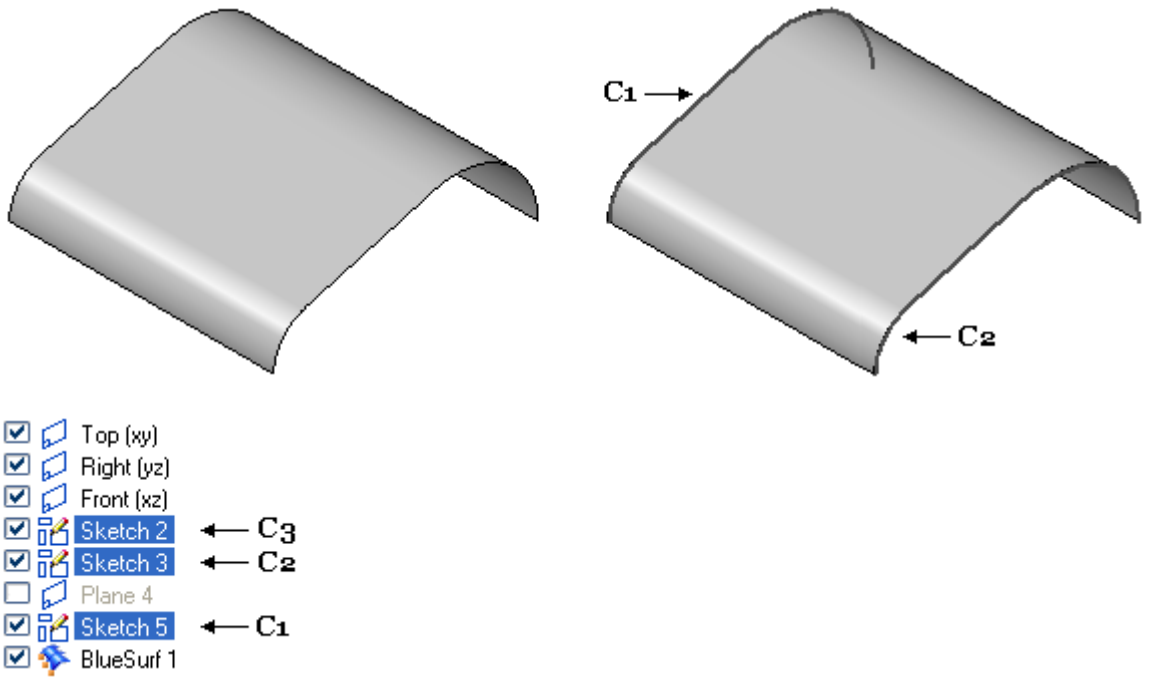

How to add a new cross section.

Step 1: First, add a new cross section (C3) that was created before the BlueSurf feature.

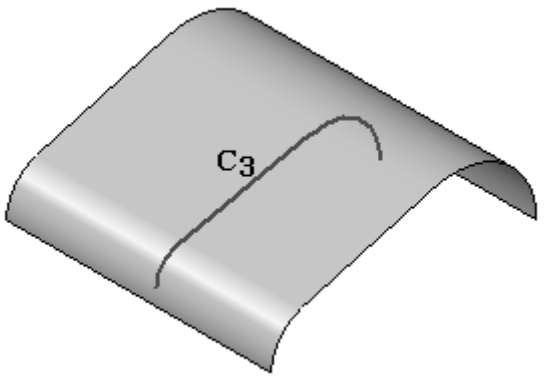

Step 2: Click the Select Tool and then select the BlueSurf feature. On the ribbon bar, click Edit Definition.

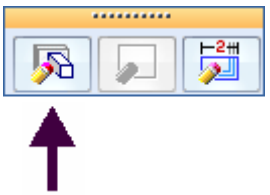

Step 3: On the BlueSurf commandbar, click the Cross Section Step.

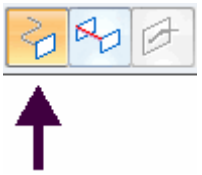

Step 4: Identify the new cross section (C3). Notice that cross section C3 is placed last in the cross section order, which causes the BlueSurf feature to reverse direction. The cross section order below is C1, C2 and then C3. You can reorder the cross sections to make C3 be defined between C1 and C2.

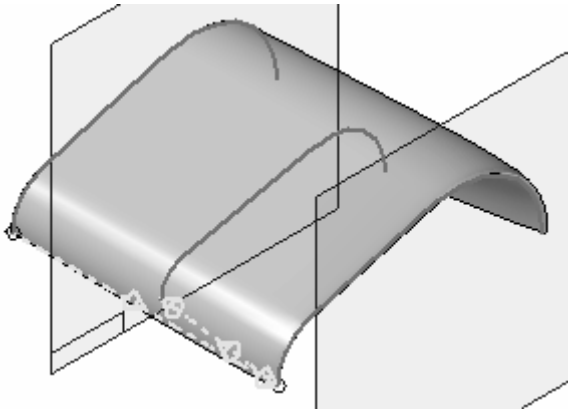

Step 5: On the BlueSurf command bar, click the options button. Click the *Advanced* tab.

Cross section C3 is shown as Section 3. To reorder C3 to be between C1 and C2, click Section 3 and then click Up. Click OK to apply the reorder.

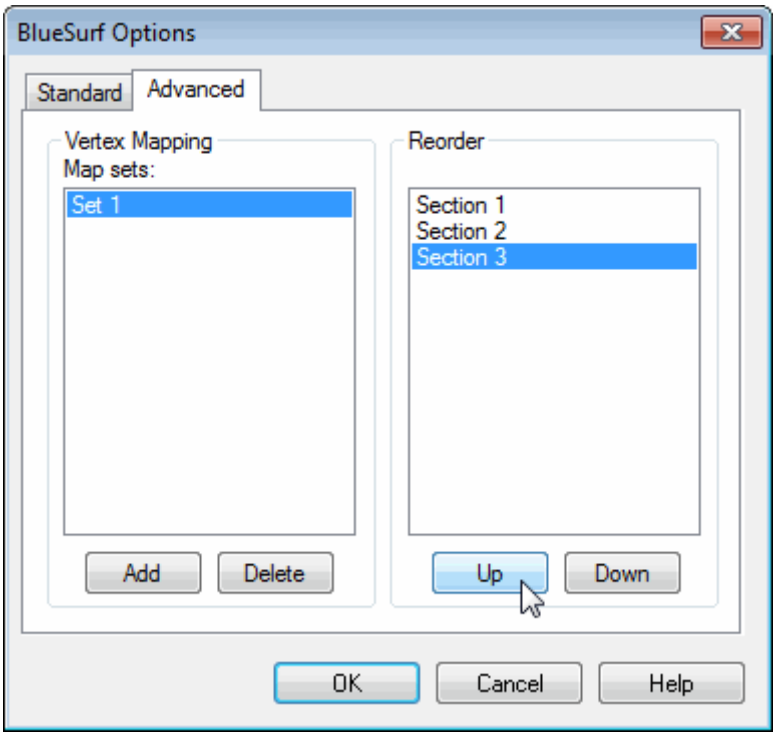

The following shows the result with cross-sections ordered C1, C2 and C3.

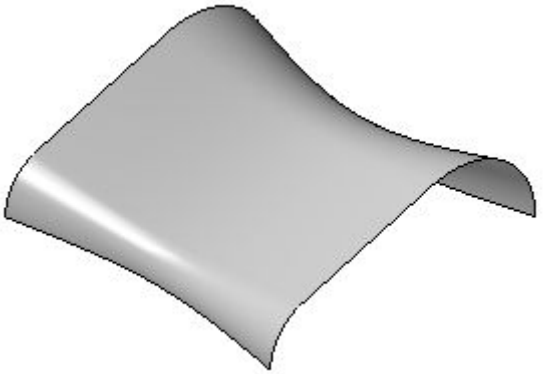

Adding cross sections created after the BlueSurf feature

If you create a cross section (A) after the BlueSurf feature (B), the cross section will have to be moved up in the feature tree to be recognized by the BlueSurf feature.

To move the cross section up in the feature tree, click the Select tool. In PathFinder, click and hold the Blue Surf and drag it below the latest sketch as shown.

The sketch can now be seen by the BlueSurf feature.

Vertex mapping

Vertex mapping is a technique to help create flow between section vertices. If there is a vertex count mismatch between sections, equally spaced vertices are used on each section.

Notice in the image below that section (A) has four vertices and section (B) has three vertices. The BlueSurf command automatically inserts vertices equally spaced on each section. Notice the surface flow is not smooth.

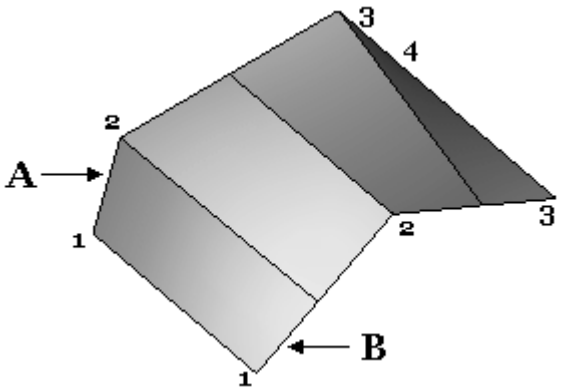

You can add vertex map sets to create a smooth surface flow. You can add vertex maps while creating a BlueSurf or by editing an existing BlueSurf.

On the BlueSurf command bar, click the Options button. On the BlueSurf Options dialog box, click the *Advanced* tab.

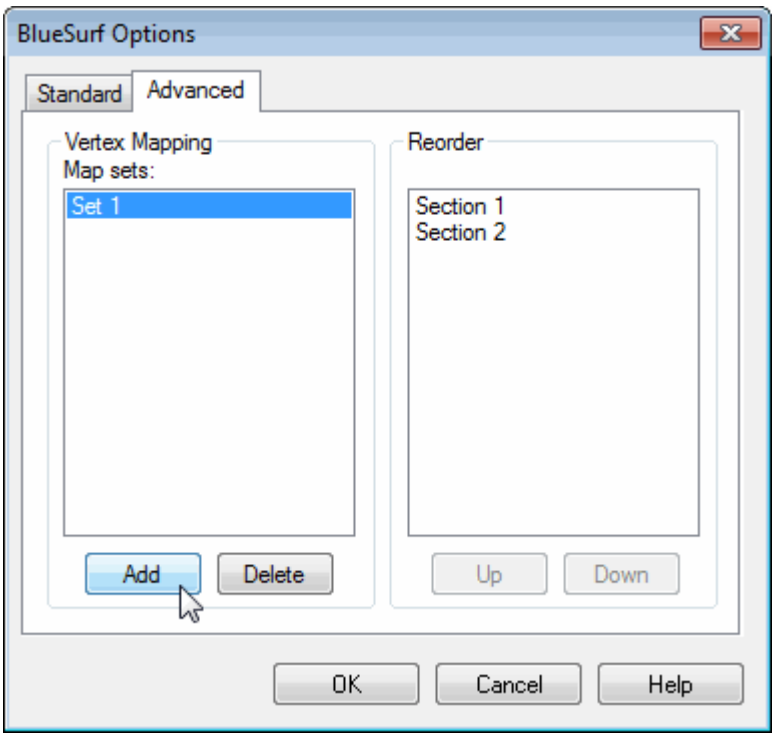

Click Add and then select two vertices to be mapped together as shown.

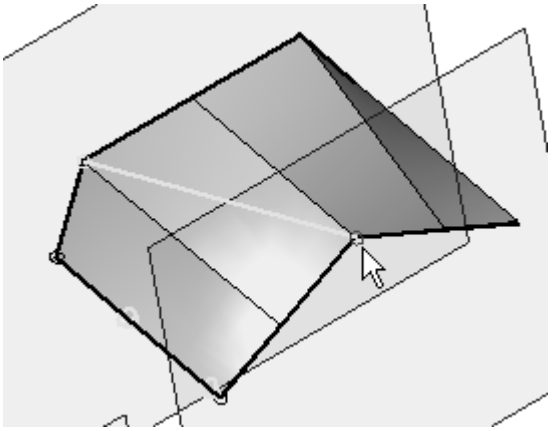

Click Add again and select the next two vertices to be mapped together as shown.

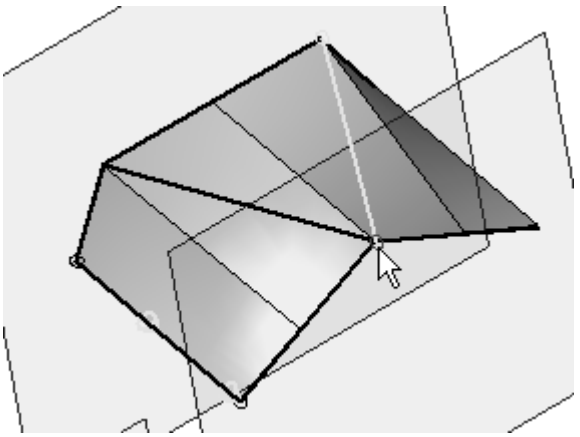

Click OK in the dialog box and then Finish. The result is shown below.

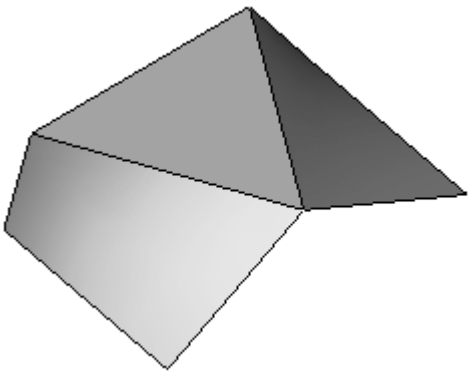

Activity: Creating a BlueSurf using analytics

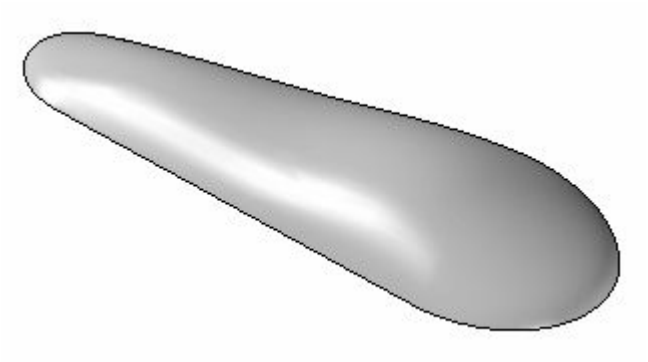

Overview

In this activity, you will learn to create a BlueSurf feature. You will use provided sketches to create a BlueSurf surface.

Objectives

After completing this activity you will be able to create a BlueSurf feature..

Turn to Appendix G for the activity.

Activity: Creating and editing a BlueSurf

Overview

In this activity, you will learn to create and edit a BlueSurf. You will use provided curve sketches to create a BlueSurf.

Objectives

After completing this activity you will be able to:

- Create a BlueSurf.
- Insert sketches.
- Edit BlueDots.
- Dynamically edit curves.

Turn to Appendix H for the activity.

Lesson review

Answer the following questions:

- What is a cross section used for in creating a surface?
- What are guide curves?
- When do cross sections and guide curves have to be connected?
- Name the two ways to edit a cross section or guide curve?
- How do you add more cross sections to a BlueSurf?
- How do you add more guide curves to a BlueSurf?
- What happens to inserted sketches on a BlueSurf when the BlueSurf is deleted?
- How do you get BlueDots on inserted sketches on a BlueSurf?
- How do you turn off the display of BlueDots?
- On the BlueDot ribbon bar, what does the Relative/Absolute Position option do?

Lesson summary

You control surfaces by curve definitions. You change the surface shape by editing the underlying curves. Edit curves by using Dynamic Edit or by editing the curve sketch/profile.

The extruded and revolved surfaces creation methods work similarly to the solid protrusion and revolved protrusion commands. These surfaces are useful in the development of more complex surfaces.

BlueSurf provides you the same results of a swept or lofted surface. However, BlueSurf provides much more control and editing capability. You can add additional cross sections and guide curves. You can control tangency at the start and end cross sections. You can use BlueDots or Pierce points to connect the inserted cross section and guides. Editing the BlueDots gives you real-time surface shape updates as they are moved.

Bounded surfaces are used to fill in gaps in a model. A bounded surface is created by selecting edges/curves that form a closed loop. You have the option to make the resulting surface tangent to adjacent surfaces.

Lesson

6 *Surface manipulation tools*

Objectives

After completing this lesson you will be able to use of the surface manipulation commands:

- Extend Surface
- Offset Surface
- Copy Surface
- Trim Surface
- Delete Faces
- Stitched Surface
- Round
- Replace Face
- Parting Split
- Parting Surface
- Split Face

Extend Surface

Extends a construction surface along one or more edges.

- The edges you select can form a continuous chain (A) or be interrupted (B).

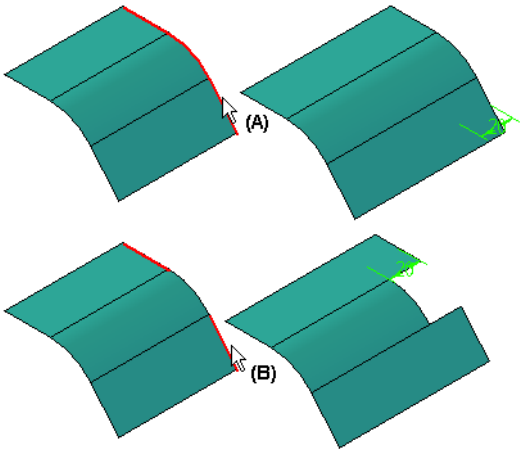

- The extended edge can either follow a natural, linear or reflective path.
- Extend options: availability depends on whether a surface is analytic (planes, partial cylinders, cones, spheres, and tori), or non-analytic (created by using b-spline curves in sweep, extrude, loft or BlueSurf operations).

A: Natural Extent: the extended surface will continue the natural curvature of the input face:

– If the input surface is linear with respect to the edge you select, the extension will be linear.

– If the input surface is radial with respect to the edge you select, the extension will be radial.

– If the input surface is based on a b-spline curve with respect to the edge you select, the extend feature is both tangent to and matches the radius of curvature of the existing surface.

B: Linear Extent: the extended portion of the surface will be linear and tangent with respect to the input face.

Note

Not available for analytic surfaces.

C: Reflective Extent: the extended portion of the surface will be a reflection of the input surface.

Note

Not available for analytic surfaces.

The following illustration shows a construction surface extended with distance (A) with a linear extent (B) and a natural extent (C).

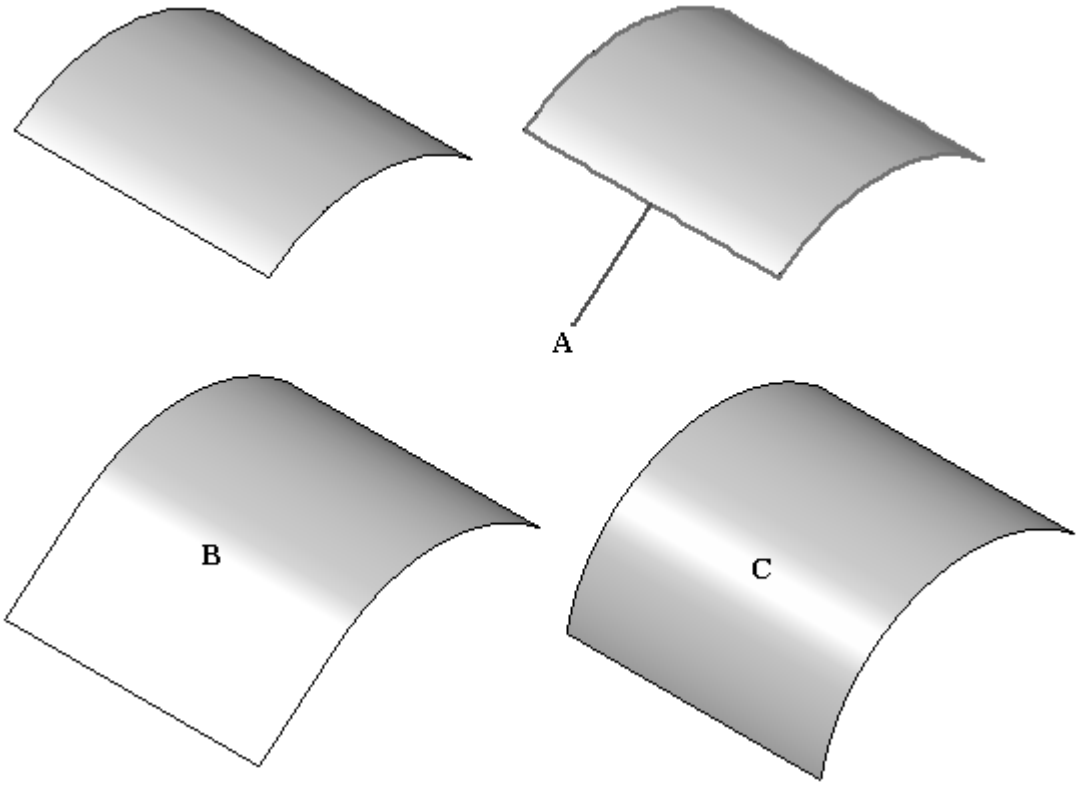

Offset Surface

Creates a construction surface by offsetting a solid body, solid face, a construction surface face or chain of faces, or a construction surface.

- The new surface is offset along a normal vector at a specified distance from the original surface, and is associative to it.
- If the face or surface has boundaries, Offset Surface has options to remove or keep the boundaries on the offset surface.

The following illustration shows an offset surface B offset in direction A with the show boundaries option on.

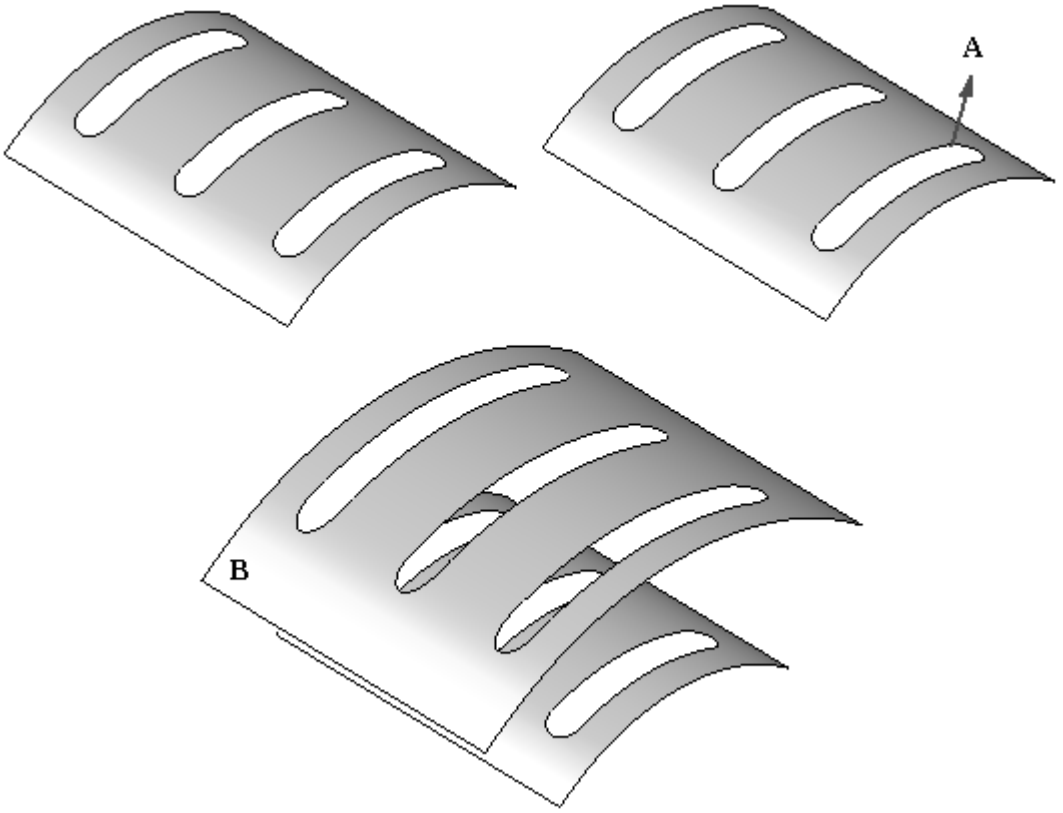

Copy Surface

Creates a construction surface feature that is derived from one or more input faces.

- The faces you select do not need to be adjacent to each other.
- You can specify whether any internal or external boundaries are removed on the new copy of the surface.

The following illustration shows surface face A copied with boundaries removed B.

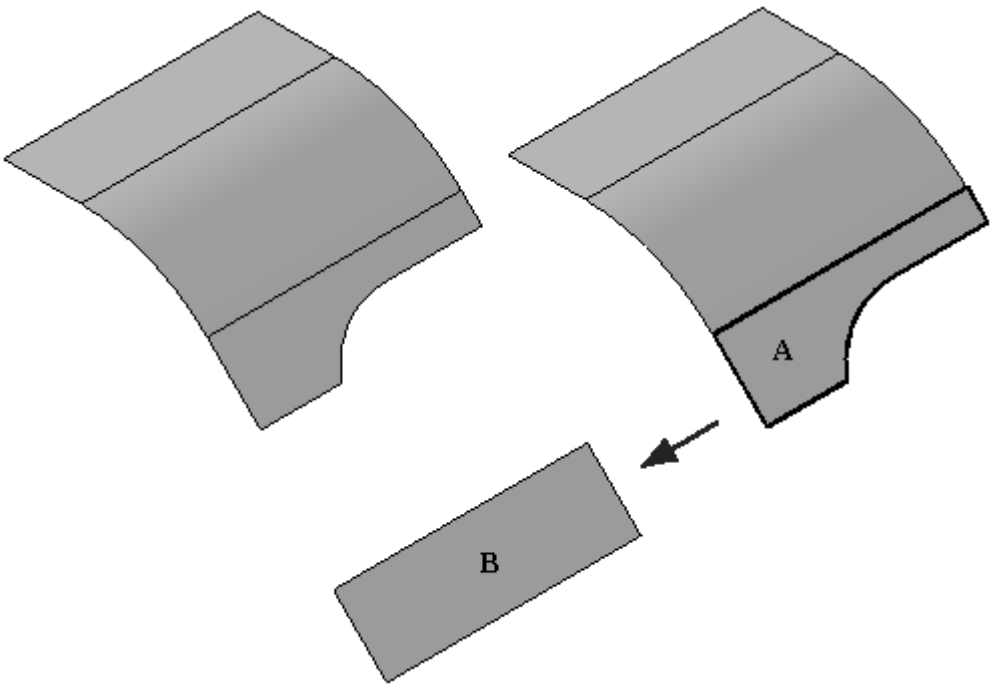

Trim Surface

Trims one or more surface(s) along input elements.

- You can use a curve, reference plane, or another surface as the input element.
  - If using curves,
    - ◊ They must lie on the surface you are trimming; use the Project Curve command to project the curve onto the surface first.
    - ◊ Closed curves that do not completely lie on the surface are not supported.
  - If using a curve or surface as the trimming element:
    - ◊ If the curve or surface boundary does not extend to the edges of the target surface , the trim boundary element is extended linearly and tangent to the input element.
    - ◊ For example, surface (B) is used to trim surface (A). Since surface (B) does not extend to the edges of surface (A), linear extensions are added to the trim boundary element (C). The input element you select as the trimming tool (B) is not modified.

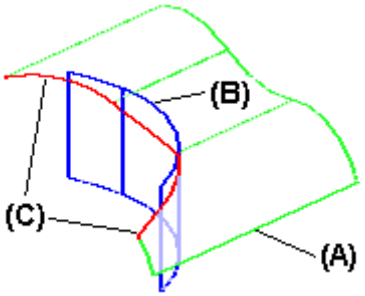

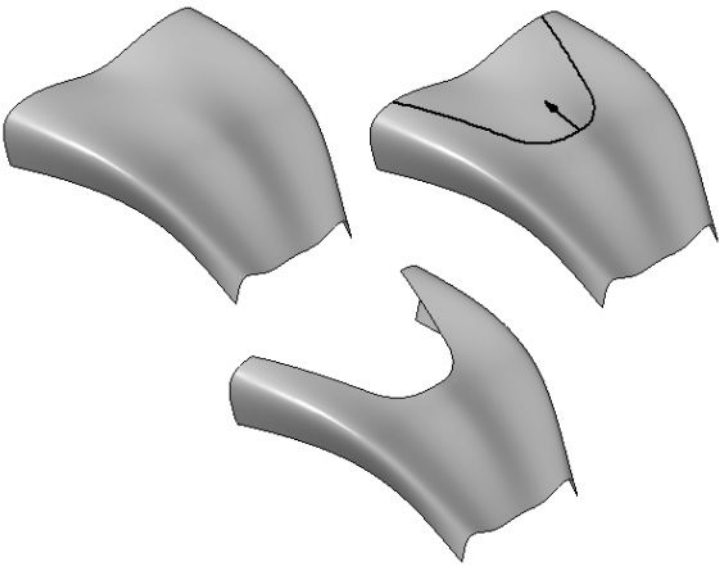

Delete Faces

Deletes faces from a model.

- Use this command to:
  - Remove faces from a design model to make design changes.
  - Simplify a model so that it processes faster when used in an assembly.
  - Remove faces from a sheet metal part when working in the Flatten environment.
  - Delete faces from a construction body.
- When you delete a face on a part body, which must always be a solid body, the gap created by the deleted surface is automatically closed.
- When you delete a face on a construction body, which is not required to be a solid body, you can specify whether the gap is closed or left open using the Heal option on the ribbon bar.
- When you clear the Heal option, the gap is not closed and you can construct another surface to close the gap. This can be useful when working with foreign data which cannot be converted into a solid body when you import it.

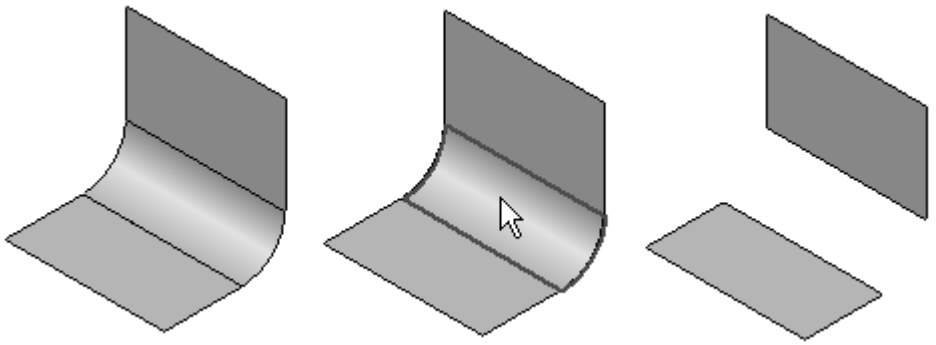

Stitched Surface

Stitches together multiple, adjacent construction surfaces to form a single construction surface feature.

- This command is useful for joining imported surfaces.
- If the stitched surfaces form a closed volume, you have the option to designate the solid body as a base feature.
- You can set the stitched surface options for tolerance and surface healing on the Stitched Surface Options dialog box.
- Notice the default tolerance on the Stitched Surface Options dialog box. Once you turn on the Heal option, you can change this value if the edges of two surfaces being stitched together do not meet the default tolerance.

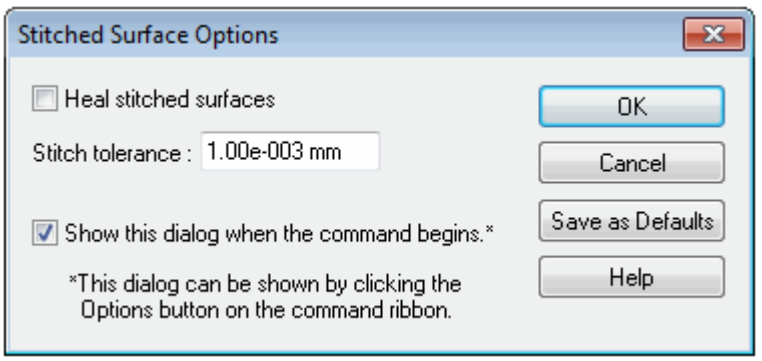

Note

If you need to place a round at a common edge of two surfaces, you must stitch the two surfaces together first. You will learn more about rounding in the next section.

Tips:

- To remove surfaces from the select set, select the surfaces while pressing the SHIFT key.
- To delete the link between the stitched surface feature and its parents, use the Drop Parents command on the shortcut menu. This command reduces the amount of data in the file. Once you drop the parent information, the stitch surface feature can no longer be edited.
- You can use the commands on the shortcut menu to display, hide, edit, rename, or recompute the stitched surfaces.
- If the output forms a closed volume, a solid body will be created. Otherwise, the stitch surface will be a sheet body with free edges that can be stitched to other surfaces.

- If the stitched surfaces result in a solid body and there is no base feature in the file, the Make Base Feature command becomes available on the shortcut menu, and you can make the stitched body the base feature for the part.

To show the stitchable edges on construction surfaces, click Surfacing tab® Surfaces group® Show Non-Stitched Edges located on the list headed by the **Stitched** command.

The illustration below shows the stitchable edges for surface A and surface B. Surfaces A and B were stitched together to produce C and the stitchable edges are shown.

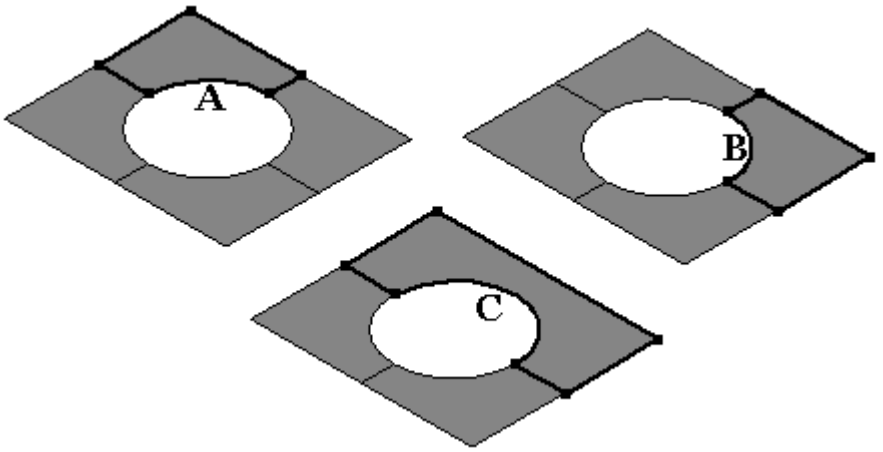

Round

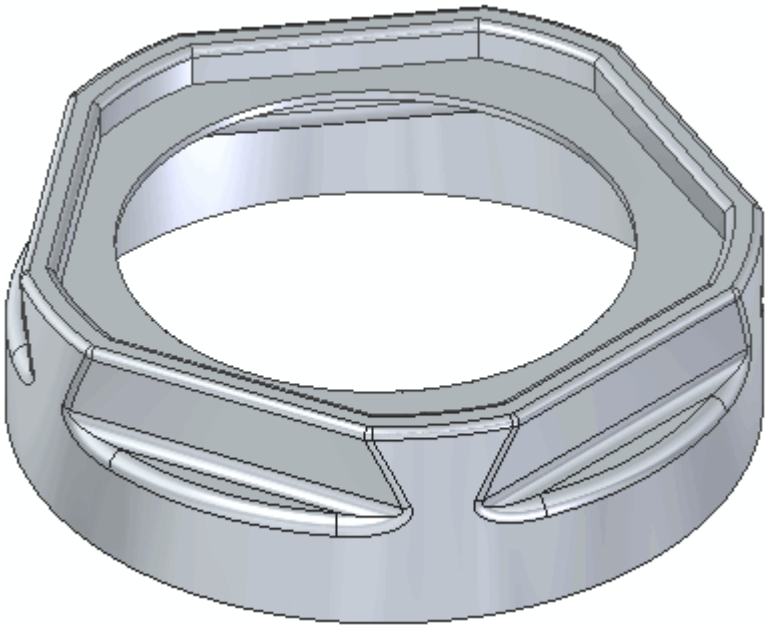

You can use the Round command to place fillets and rounds on surface edges or between two adjoining surfaces.

Surface Blend

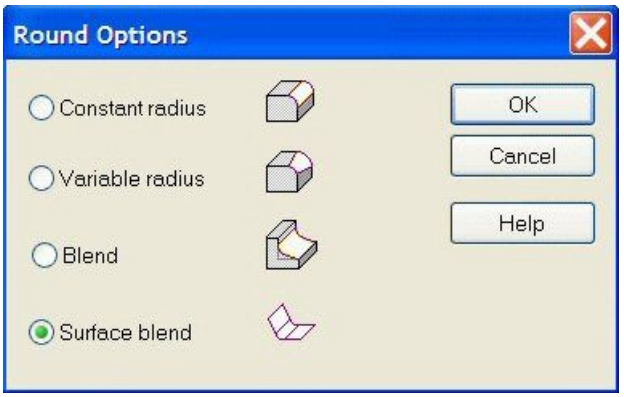

This option of the **Round** command allows the user to create a face blend between two sheet bodies. The bodies do not have to share a common edge. (Can have a gap between them or they can intersect.) The input surfaces can come from a single sheet body or from 2 sheet bodies.

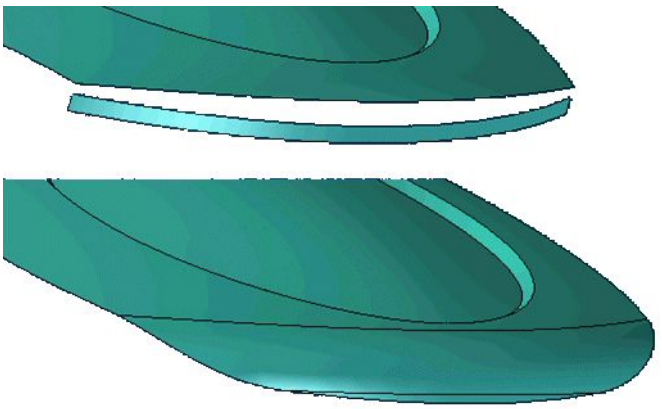

As part of the input, the user will have to define the side of the selected face to blend.

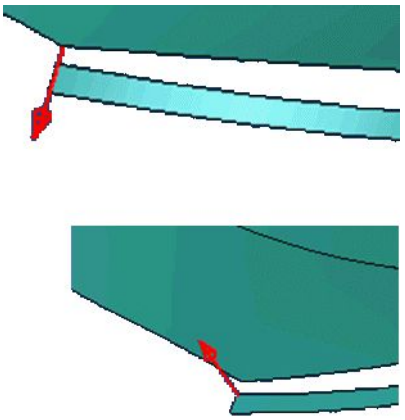

The *Surface Blend parameters* provide options to:

- trim the input surfaces.
- trim the resultant blend.

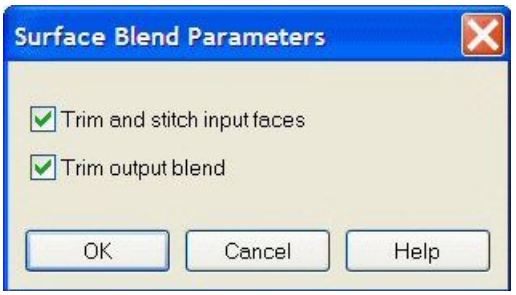

Note

Default is to trim the input surfaces and resultant blend.

Surface shapes

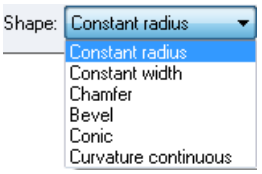

- Constant radius – Creates a constant radius circular cross section blend.
- Constant width – Creates a circular cross section blend with a constant chord height between the two selected faces. (Blend_Radius value defines the width and the Blend_Softness_Ratio is fixed to be 1.0)
- Chamfer – Creates a chamfer blend with equal setbacks. (Blend_Radius value defines the setback distance)
-

  Note

  The Bevel, Conic and Curvature Continuous options all utilize the continuity or “softness” ratio. 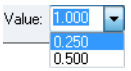

Bevel – Creates a chamfer blend using a ratio to control the chamfer angle between the faces. (Blend_Softness_Ratio > 0.0)

- Conic – Creates a constant elliptical cross section blend.

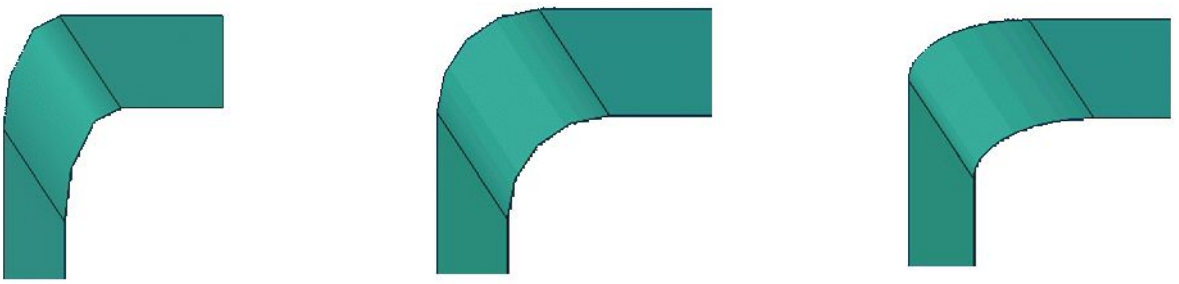

In the previous image, the Blend_Softness_Ratio values are 0.5, 1.0 and 2.0 respectively.

- Curvature Continuous – Creates a continuous blend between the selected walls. The softness value is used to control the continuity of the surface between the walls.

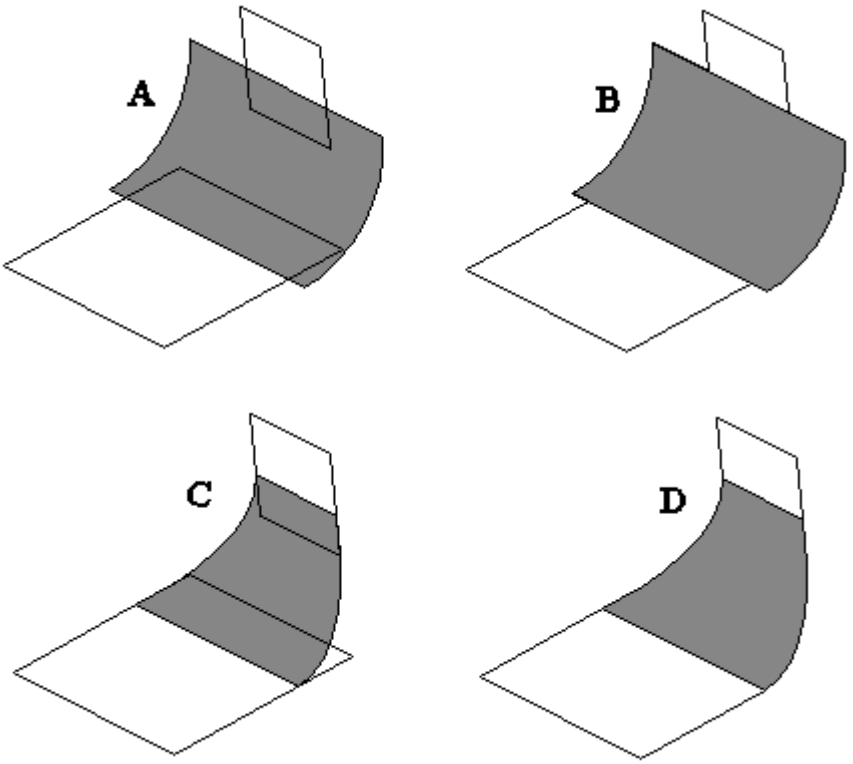

(A) no trim

(B) trim input surfaces only

(C) trim blend surface only

(D) trim both input and blend surfaces

Possible solutions of intersecting surfaces:

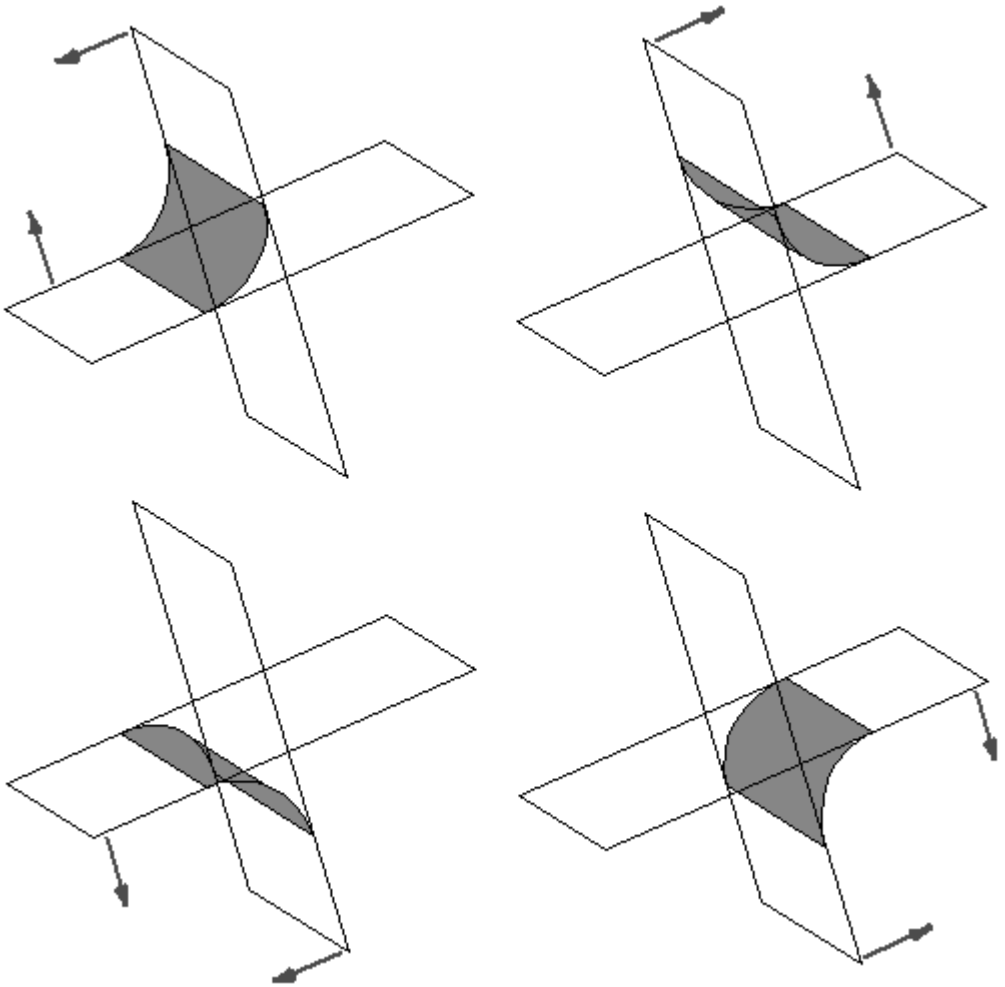

Replace Face

The Replace Face command replaces selected faces on a part.

- The replacement face can be a construction surface, a reference plane, or another face on the part.
- When replacing more than one face, the faces being replaced cannot touch each other.
- When you replace a face using a construction surface, the construction surface is hidden automatically when you finish the feature.

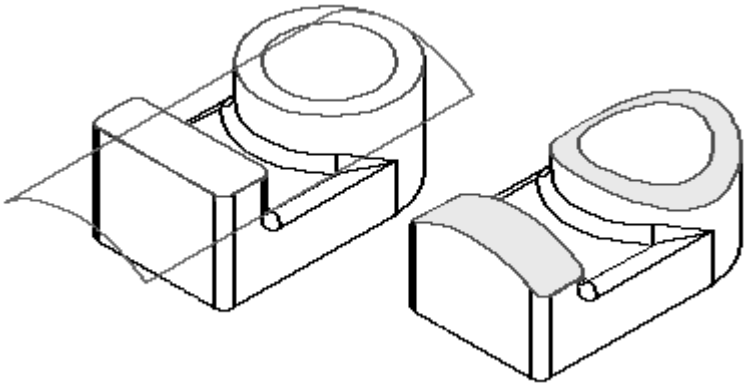

Activity: Surface manipulation

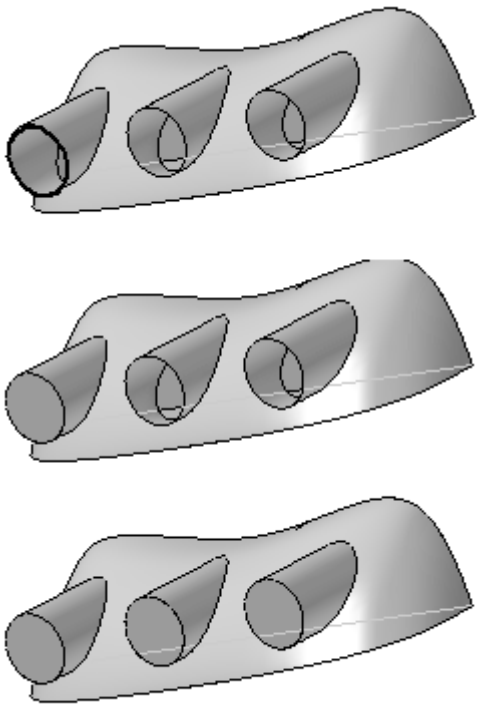

Overview

In this activity you will learn to use the surface manipulation commands.

Objectives

After completing this activity you will be able to:

- Extend a surface.
- Offset a surface.
- Trim a surface.
- Copy a surface.
- Delete faces of a surface.
- Stitch surfaces together.
- Round surfaces.
- Replace a face on a solid body.

Turn to Appendix I for the activity.

Split Face

Splits one or more surfaces (A) using an element (B) you define.

- You can select curves, edges, surfaces, reference planes, and design bodies as the elements that split the face.

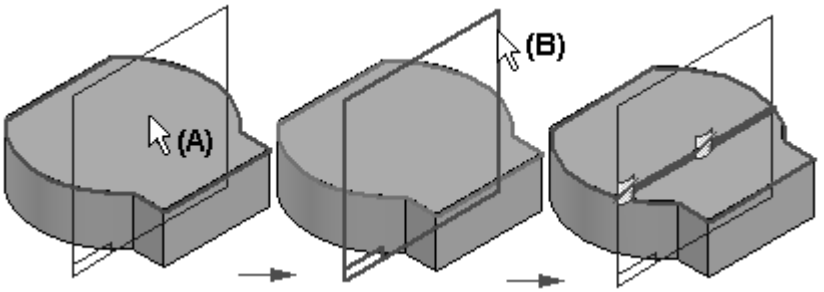

Splitting a face can be useful when constructing a model that you want to use for finite element analysis purposes or when you want to isolate a portion of a face so you can to apply a decal or image in a specific location.

- If the element you are using to define the split location does not extend to the boundary of the face you are splitting, the Split Face command will extend the imprinted splitting curve tangentially. The original element you selected is not extended. For example, if you split a face using a sketch that consists of a line and an arc, the imprinted curve is extended linearly and tangent to the original line and arc.

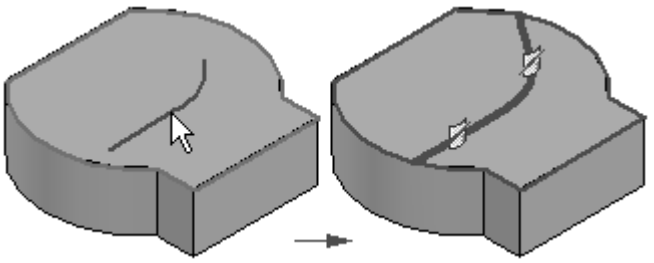

- If the imprinted curves intersect when they are extended, the split face feature will not succeed.

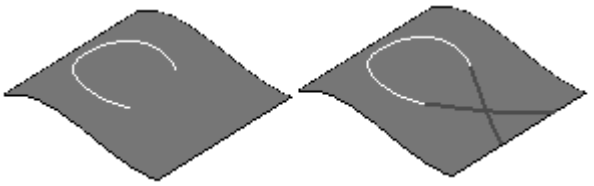

- When you use a surface as the splitting element, the surface must physically intersect the surface you want to split.

- When you use a reference plane as the splitting element, the reference plane must theoretically intersect the surface you want to split (the reference plane is considered to be infinite in size).

- When you use curves or edges as the splitting elements, such as a sketch to split a face, the splitting elements must lie on the face you are splitting. You can use the Project Curve command to project the elements onto the 3-D face.

Parting Split

The Parting Split command splits a set of faces along the silhouette edges of the part.

- This command can be useful when working with a part that will be molded or cast.
- Parting lines are the same as silhouette lines for a given face.
- You define the vector direction for calculation of the parting lines by defining a reference plane (A in the following image).
- A parting split feature (B) is represented by a curve.

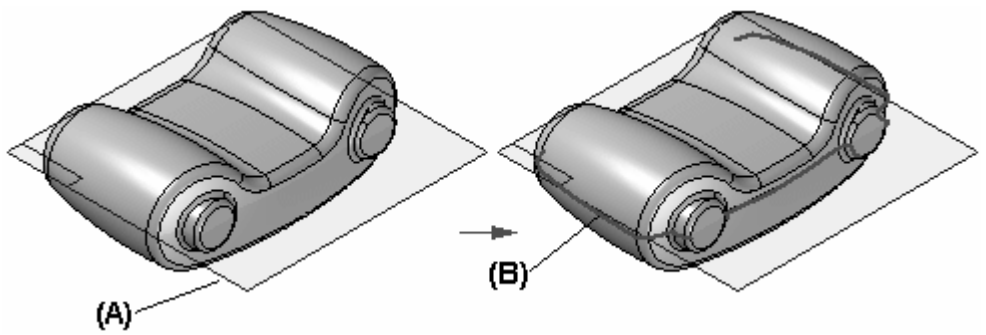

Note

Surfaces which do not cross the parting line and planar faces are not split by this command.

Parting Surface

Constructs a parting surface along a parting curve you select.

You construct a parting surface by selecting a reference plane (A) to define the orientation of the linear cross section curve and a 2D or 3D parting curve (B), which defines the sweep path for the parting surface (C).

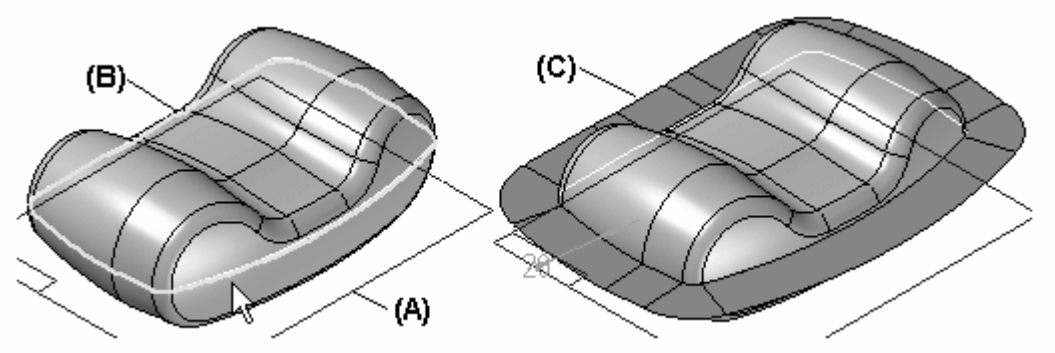

You create the parting curve in a separate operation. For example, you can use the Intersection Curve command or the Parting Split command to create the parting curve.

Activity: Parting split and parting surface

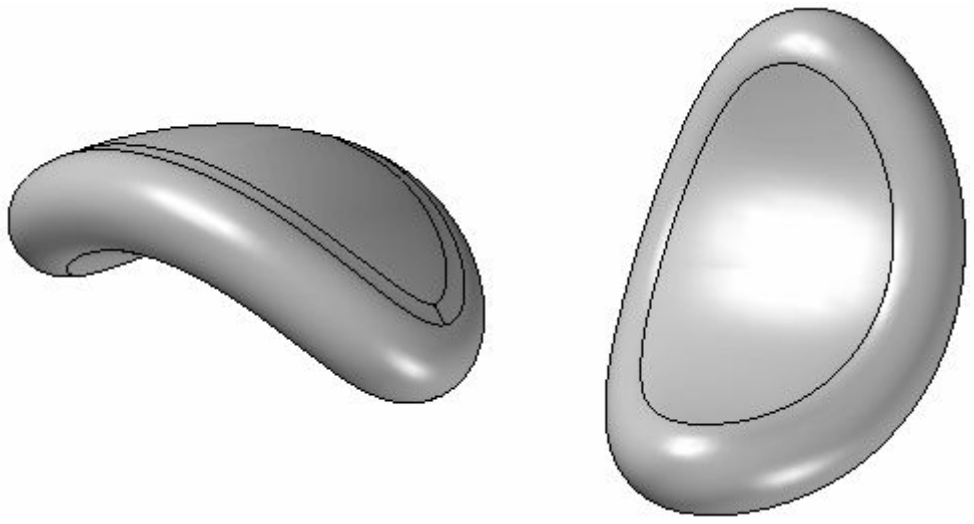

Overview

When you complete this activity, you will be able to use the Parting Split and Parting Surface commands.

Objectives

After completing this activity you will be able to:

- Insert Part Copy
- Boolean Feature
- Parting Split
- Parting Surface
- Divide Part

Turn to Appendix J for the activity.

Activity: Creating a rotary razor body

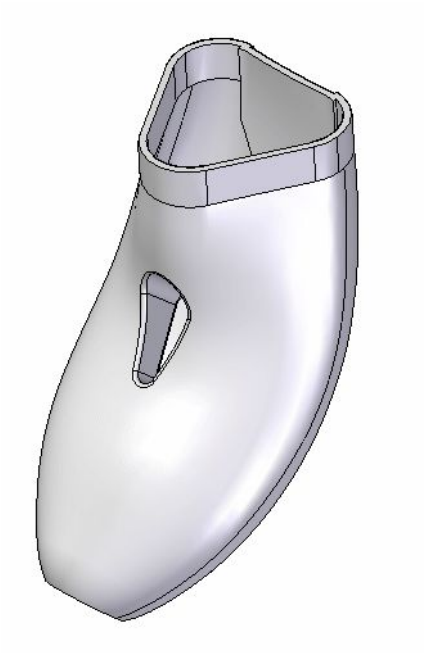

Overview

In this activity, you will utilize several surfacing techniques to create the body for a rotary razor.

Objectives

After completing this activity you will be able to:

- Curve creation and manipulation techniques.
- Extruding surfaces.
- Blue Surf generation.
- Creating bounded surfaces.
- Using the Parting Split command.
- Offsetting surfaces.
- Extending surfaces.
- Generating a thin-walled “plastic” part.
- Placing rounds.

Turn to Appendix K for the activity.

Activity: Putting it all together

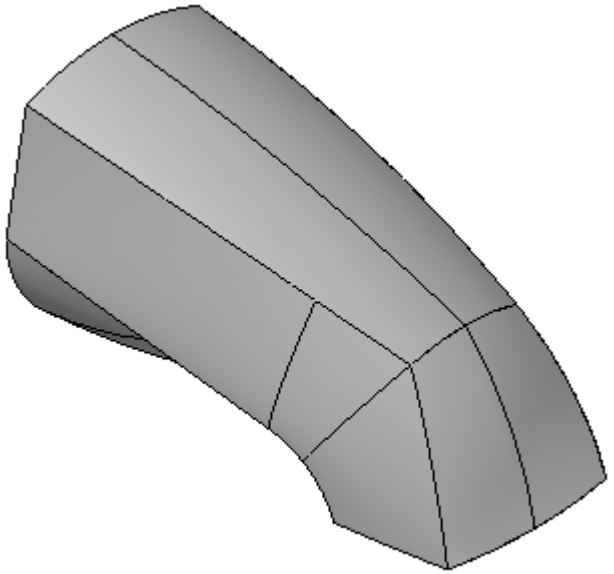

Overview

In this activity, you will use the surfacing tools and workflows learned in this course to build a bathtub spout.

Objectives

After completing this activity you will be able to:

- Read a control drawing.
- Create and edit curves.
- Create and edit surfaces.
- Make a solid feature.

Turn to Appendix L for the activity.

Lesson review

Answer the following questions:

- What are the two extent options available on the Extend Surface ribbon bar?
- How do you create an offset surface without boundaries from an input surface that has boundaries?
- Name the methods of creating a boundary curve on a surface.
- Can you trim a surface with multiple open curves in one step?
- Can you trim a surface with multiple closed curves in one step?
- Explain what stitch tolerance is.
- How do you round a common edge of two separate surfaces?
- What is a surface blend?
- Do two surfaces have to be stitched together to insert a surface blend?
- Can multiple faces of a solid be replaced in one step?

Lesson summary

Many tools exist for the modification of surfaces; the methods employed in the use of these commands will greatly increase your ability to create and control complex shapes.

After stitching surfaces together, Solid Edge will automatically create a solid body.

You can delete and replace faces as needed to optimize your design.

The Parting Split and Parting Surface commands facilitate the development of parts to be manufactured in molds or dies (often called plastic parts).

Lesson

7 *Curve and surface inspection tools*

Objectives

After completing this lesson, you will be able to:

- Understand and use curvature combs.
- Use Draft Face Analysis.
- Use Curvature Shading.
- Use Zebra Stripes.

Curvature combs

Curvature combs enable the display of normal vectors on a curve or profile to help illustrate the radius of curvature. Curvature comb is accessible from the Inspect tab® Analyze group.

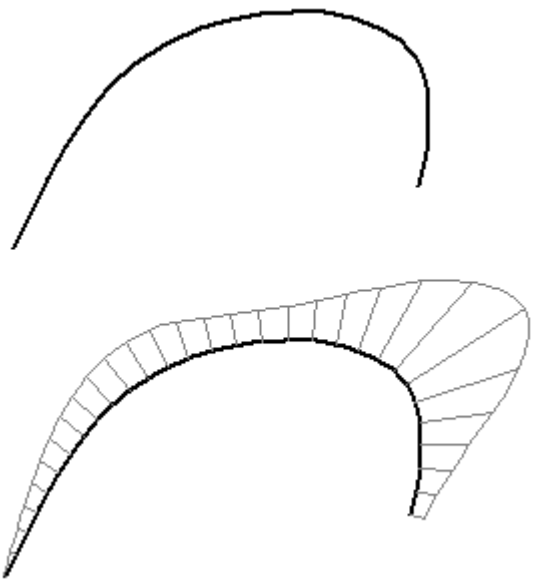

Note

The curvature comb display is not available for construction curves.

- The length of the normal vector is a function of the radius of curvature.
- Curvature combs help you determine how quickly or gradually curves change and where they change direction.
  - Abrupt changes in a curve's radius of curvature may signal a discontinuity which will manifest itself in an associated surface.
  - Curvature combs can assist in determining the feasibility of machining, say a mold tool, and to predict the aesthetic quality of surfaces.
- If you have a curvature comb displayed and use dynamic edit to make changes to the curve geometry, the comb updates immediately to reflect the changes.
- You can control the number of vectors (density) and the magnitude of the vectors in the Curvature Comb settings form.

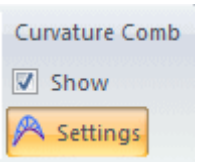

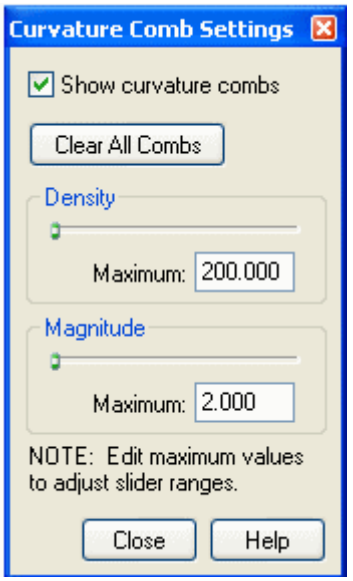
Curvature Comb Settings
Show curvature combs
Clear All Combs
Density
Maximum: 200.000
Magnitude
Maximum: 2.000
NOTE: Edit maximum values to adjust slider ranges.
Close
Help

Surface inspection tools

All available under the Inspect tab® Analyze group.

- Draft Face Analysis
- Curvature Shading
- Zebra Stripes

Draft Face Analysis

When working with plastic-injection molded parts, it is useful to visually analzye whether a part can be removed from a mold or die.

Draft Face Analysis displays colors on the model based on the surface angles with respect to a draft plane you define.

Inputs (specified in the Draft Face Analysis Settings command):

- Draft plane: the plane used to calculate the normal direction along which the part is pulled from the mold or die.
- Draft angle: the angle at which the part is pulled from the mold or die.
- Colors

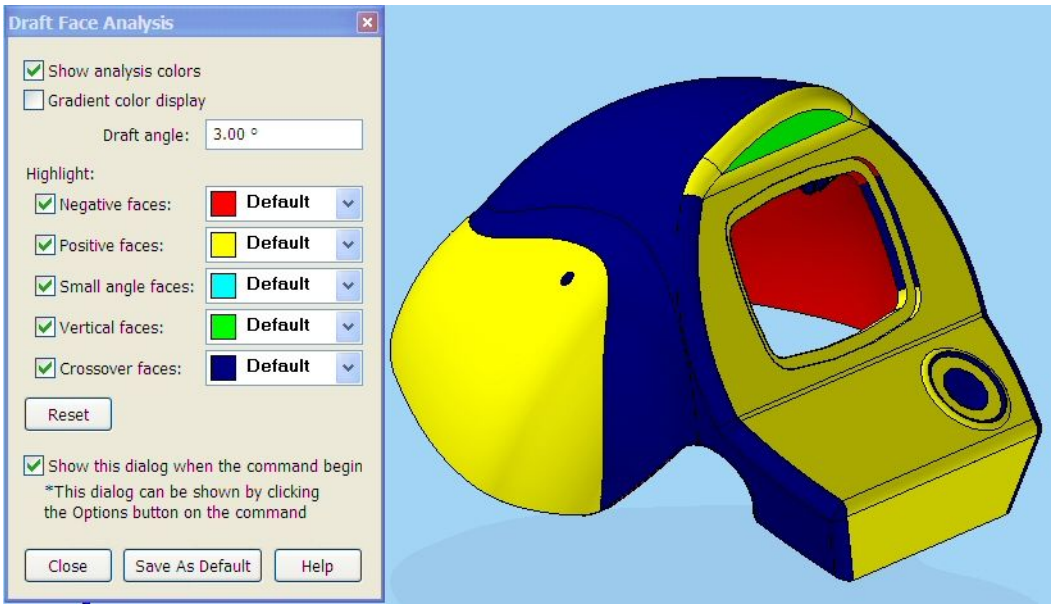

Note

To display draft face analysis colors, you must also shade the active window using the Shaded or Shaded With Visible Edges commands.

You can use the Draft Face Analysis Settings command to specify the draft plane, draft angle, and assign the colors you want to use.

Curvature Shading

When working with surfaces, it is sometimes useful to visualize the curvature of a surface to determine if there are surface discontinuities and inflections.

Curvature Shading command

- Displays colors on the model based on the radius of curvature of the model's surfaces.
- Graphically shows the radius of curvature of a model.
- Parameters:
  - Input specific radii values as limits:
    - ◊ Tightest: Displays the smallest radius (highest curvature) in the model. You can click the Find in Model button to find the smallest radius in the model.
    - ◊ Maximum: Displays an arbitrary maximum radius in the model. This value typically exceeds the largest radius in the model and is theoretically flat.
  - Input radii ranges indicated by changes in the color spectrum; for example, answers the question "How much color variation will appear in the areas containing the smallest and largest radii?"
  - Control properties in Curvature Shading Settings on the Inspect menu.

Note

You must also shade the active window using the Shaded or Shaded With Visible Edges commands to display curvature shading colors.

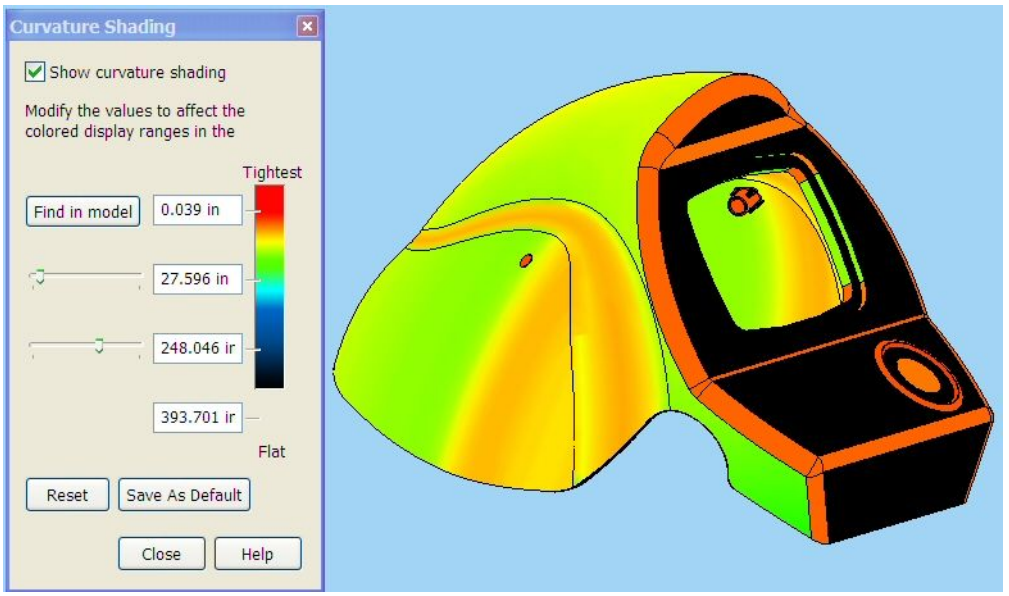

Zebra Stripes

Displays zebra stripes on the model. Zebra stripes are useful for visualizing the curvature of surfaces to determine if there are surface discontinuities and inflections.

Note

You must also shade the active window using the Shaded or Shaded With Visible Edges commands to display zebra stripes.

- Zebra Stripes are solid bands of color overlaid on top of a single face or set of surfaces:
  - Displayed at regular spacing, controlled by the user.
  - Follow the contour of the relevant faces.
- One might ask: “How do these ’stripes’ help?”
  - Smooth stripes are manifested by smooth, continuous surfaces (ie., no cusps or “wrinkles”).
  - Stripes with sharp bends would indicate abrupt changes in surface curvature (ie., a discontinuity).
  - Discontinuities will make manufacturing more difficult.
    - ◊ Metallic Parts: Machining will be more complex.
    - ◊ Molded Parts: Injection of plastic may be difficult into discontinuous areas.
  - You can control colors, spacing and the method of mapping the stripes using the Zebra Stripes Settings.

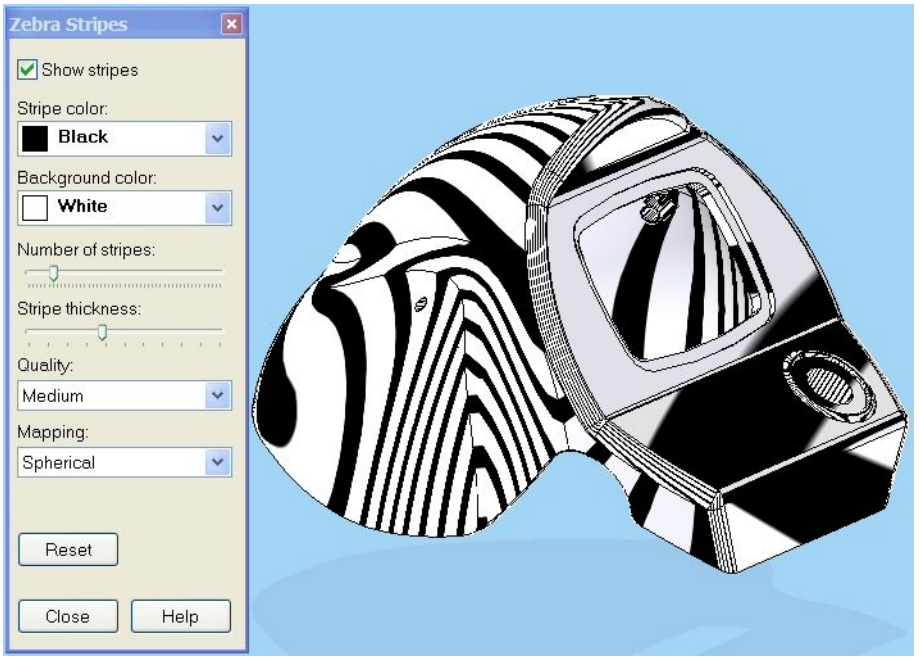

Benefits

- Striping gives quick indication of continuous edges between faces.
- Dynamic; users can see changes in real-time.
- Non-rollback edit method.

Lesson review

Answer the following questions:

- What is the Curvature Comb used for?
- In what situations would the Draft Face Analysis command be useful?
- Explain the difference between Curvature Shading and Zebra Stripes.

Lesson summary

You have learned what curvature combs show, and how to modify their output. Methods for visualizing the quality of surfaces have also been covered here.

A Activity: Drawing and editing a curve

Open *surface lab 2–01.par*.

Draw a curve

Begin the activity by drawing a curve with edit points in space.

- Select Home tab® Sketch group® Sketch .
- Select the plane below.

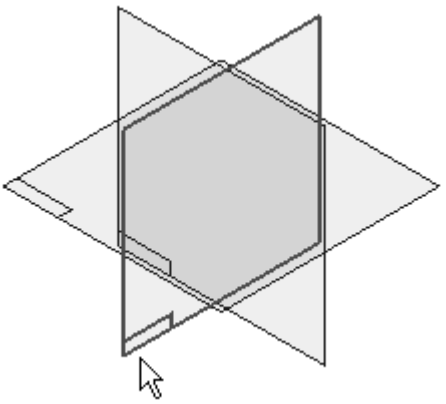

- Click Home tab® Select group® Select .

- In PathFinder, click the box next to Sketch A to show it. Use the sketch elements in Sketch A as a guide to where to place the edit points.

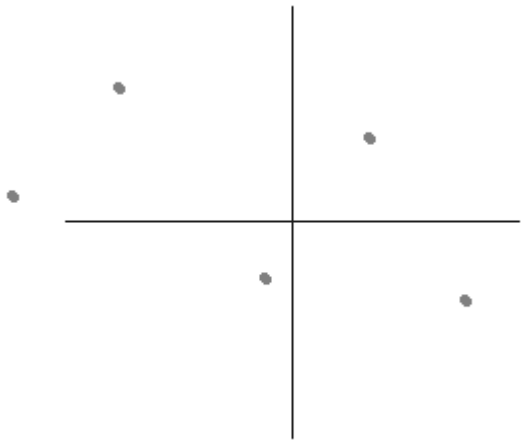

- Select Home tab® Sketch group® Curve .
- Click just above each of the construction points from left to right as shown. After clicking above the last point, right-click to create the curve.

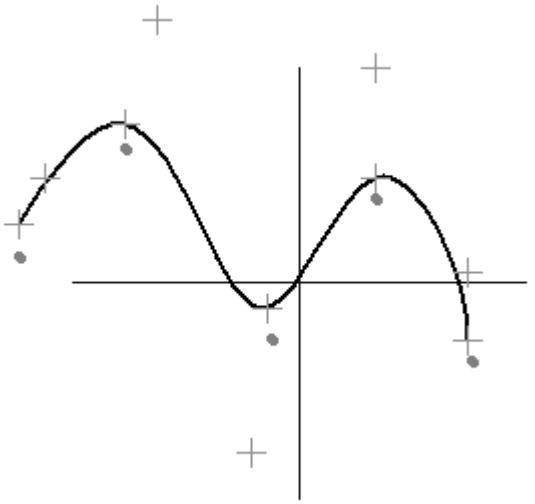

Hide the sketch containing edit points

- Click Home tab® Select group® Select.

- In PathFinder, click the box next to Sketch A to hide it.

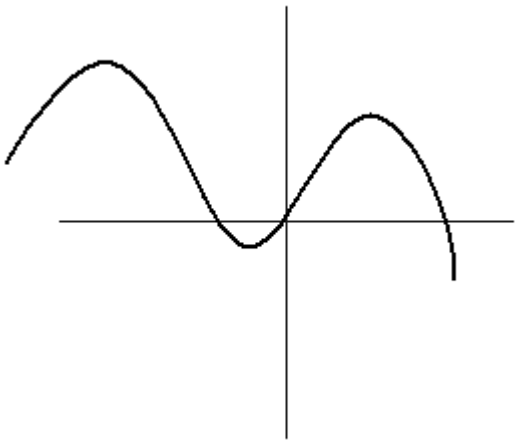

Edit the curve shape

- Select the curve and notice the display of the edit points and control polygon.

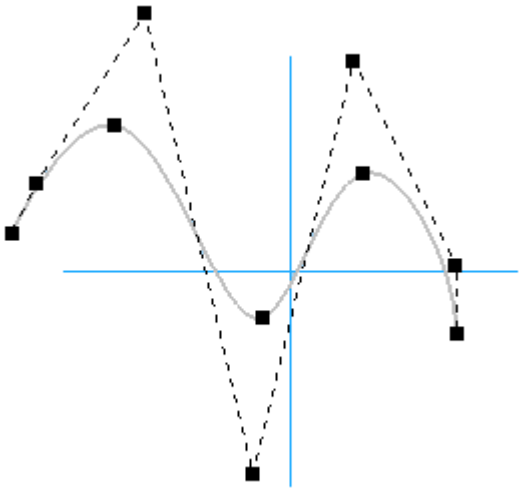

Also, the Edit Curve command bar displays; in this, the Local Edit option is on.

Note

With the Local Edit option, when you drag an edit point or control point, the shape of the curve changes near the point you drag. With Shape Edit, the entire curve changes shape slightly, preserving the overall shape of the curve.

- With Local Edit option selected, drag the edit point shown to observe how the curve shape changes.

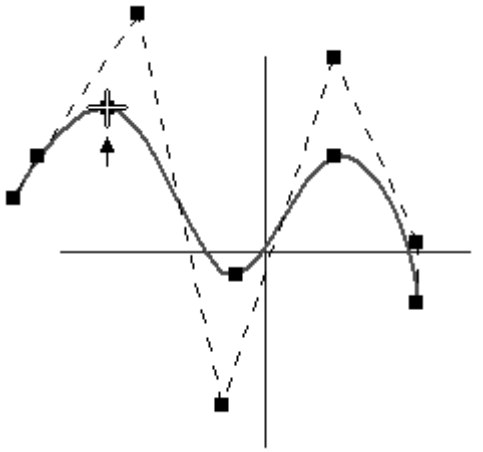

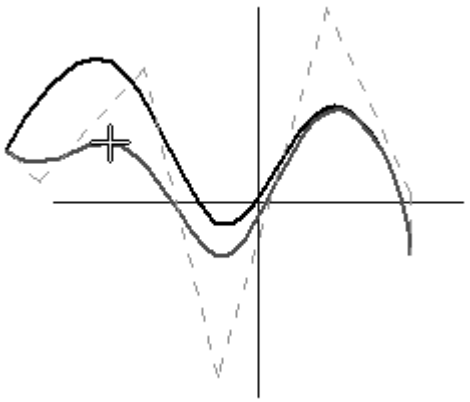

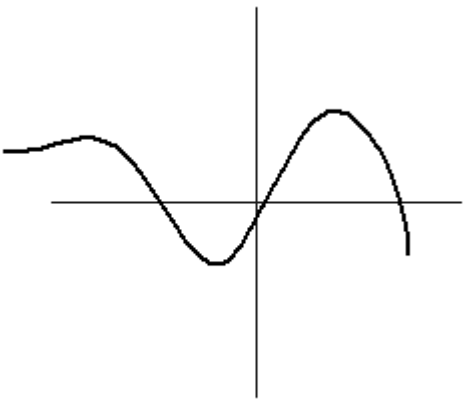

- After editing the curve, on the Quick Access toolbar, click the Undo command. This returns the curve to its original shape.
- Select the curve. On the Edit Curve command bar, select the Shape Edit option.

- With Shape Edit option selected, drag the edit point shown and observe how the curve shape changes.

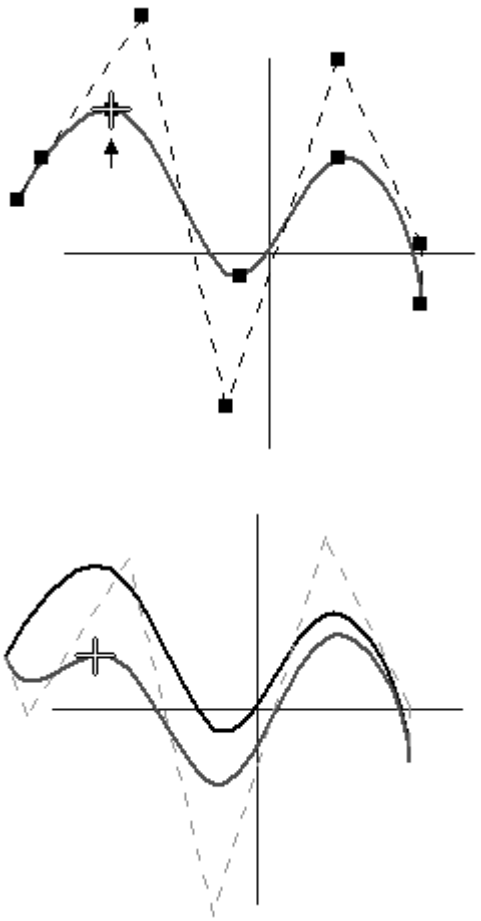

- After editing the curve, click the Undo command.

Add more control to the curve

- Select the curve. On the Edit Curve command bar, click the Curve Options button.

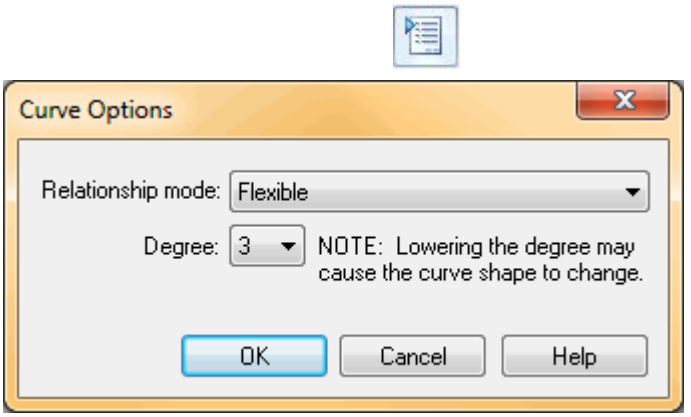

- Select the curve and on the Curve Options, ensure the degree is set to 3 and click OK.
- On the Edit Curve command bar, click the Add/Remove Points button.

- Add additional edit points to the two locations shown below.

Note

You can only insert one edit point with the Add/Remove Points command. Reselect the command to place another point. However, you can also hold down the Alt key on the keyboard and click on the curve to place as many points you need.

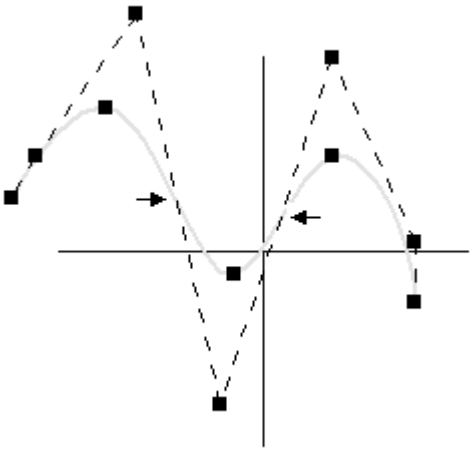

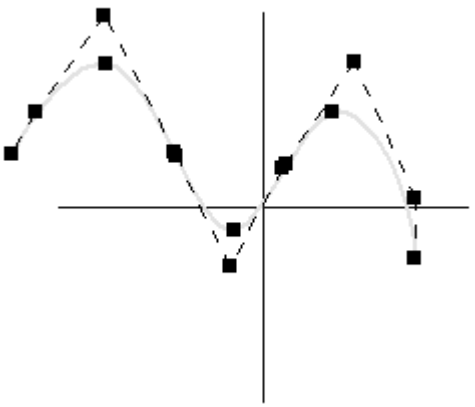

- Edit the curves again to observe how the shape changes. Undo to return the curve to its original shape.

- On the Curve Options dialog, change the Degree from 3 to 5 and click OK. Observe the change to the control polygon.

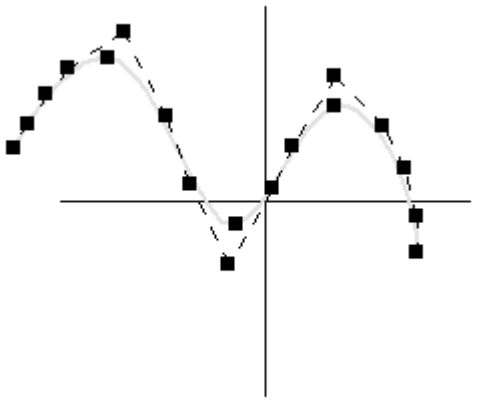

- Edit the curve again with both Local and Shape Edit options to see how the curve shape changes now with the higher degree. Be sure to undo any changes you make to the curve.

  Local edit

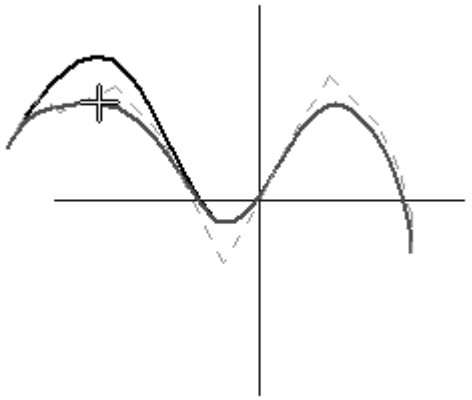

Shape Edit

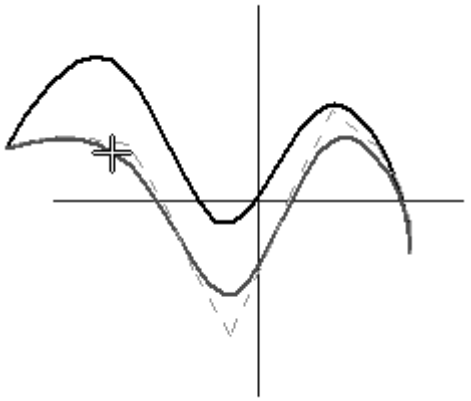

Inspect the curve using Curvature Comb

- Select the curve. On the Edit Curve command bar, select the *Show Curvature Comb* button.

Note

You can adjust the curvature comb display with the Curvature Comb Settings dialog box.

- Select Inspect tab® Analyze group® Curvature Comb Settings.

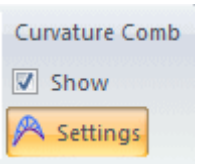

Note

Density controls the number of normal vectors. Magnitude controls the length of the vectors.

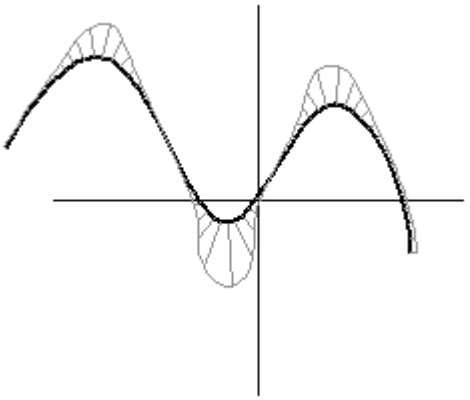

- Move the slider bars and observe the curvature comb display.

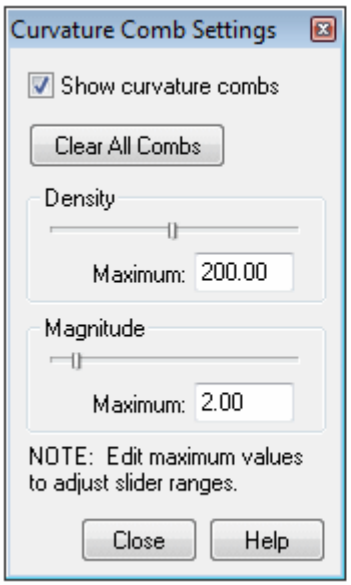

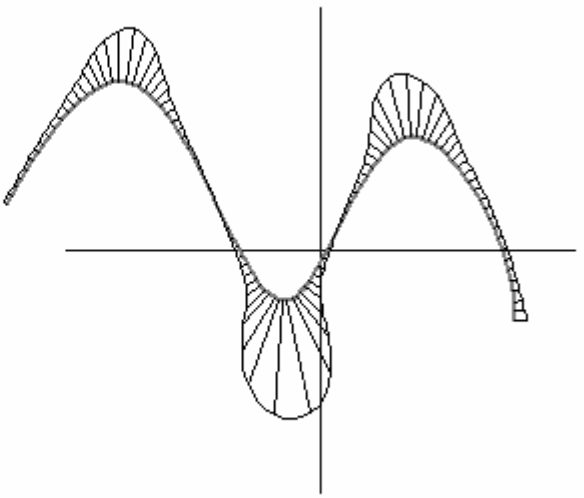

- On the Curvature Comb Settings dialog box, uncheck the “Show curvature combs” box and click Close.

- Click Home tab® Close group® Close Sketch to complete the sketch.

- On the Sketch command bar, select Finish.
- In PathFinder, click on the box next to the sketch just completed to hide it.

Draw a curve connected to elements

- In PathFinder, click on the box next to Sketch B to show it.
- Select Sketch B and click **Edit Profile**.

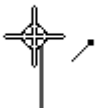

- Click Home tab® Draw group® Curve .
- Draw a curve with edit points at the endpoints of the lines (1-5) shown below. Make sure to get the endpoint connect symbol before clicking. After placing the last edit point, right-click to complete the curve.

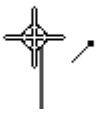

Endpoint Connect Symbol

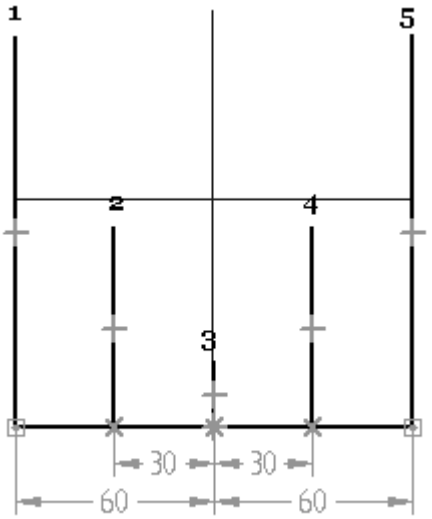

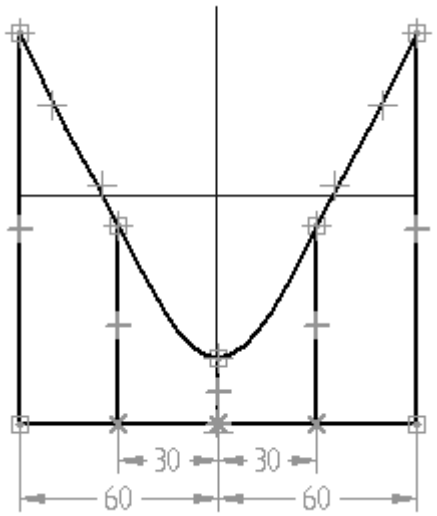

- Select the dimensions and edit their values as shown to observe how the curve is constrained to the dimensioned elements.

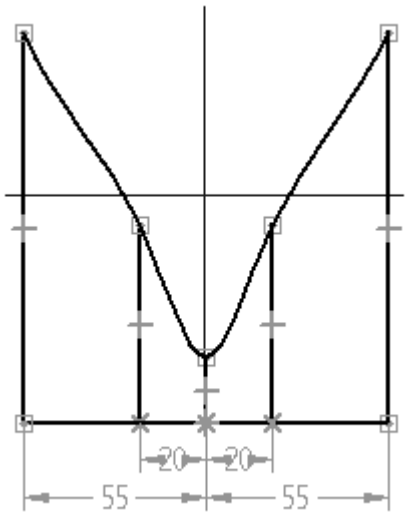

Constrain the curve

- Delete all elements in the sketch except for the curve.

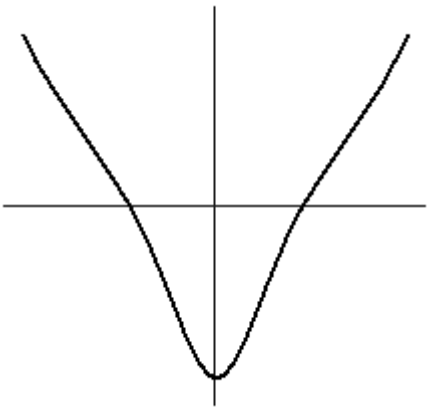

- Select the curve.

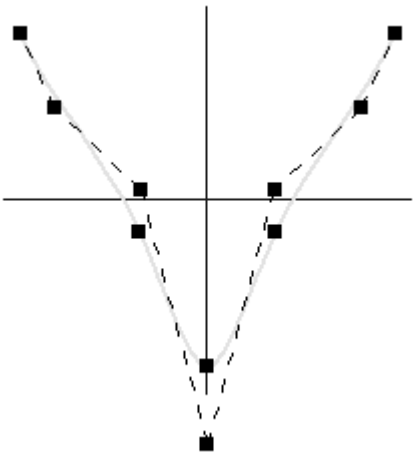

- . Click Home tab® Relate group® Horizontal/Vertical .

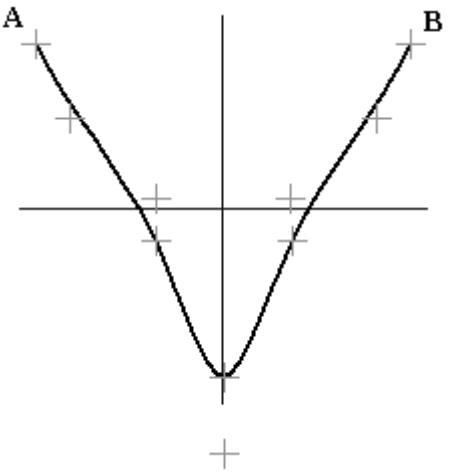

Note

Notice that the edit points and control vertices display as crosses. If you position the cursor over a cross, you will see the following denoting if it is an edit point (A) or control vertex (B).

Click point A and then click point B. Points A and B will always remain aligned horizontally.

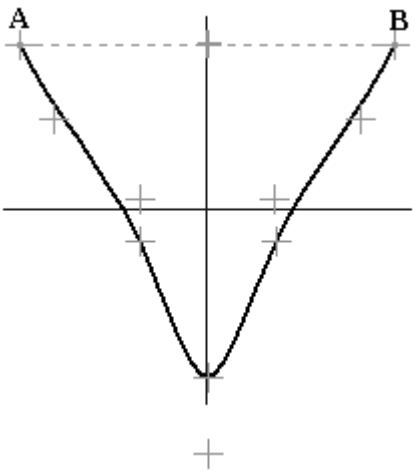

- Place a dimension as shown between the horizontal reference plane and edit point C.

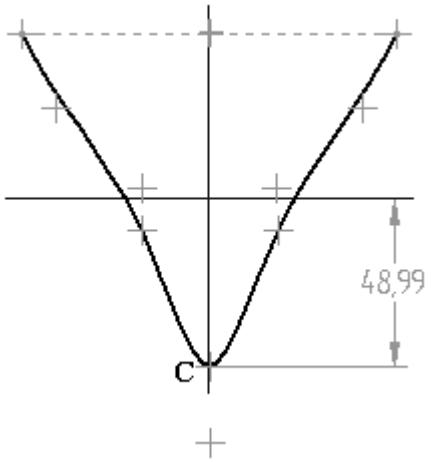

- Place a dimension as shown between the horizontal reference plane and edit point A.

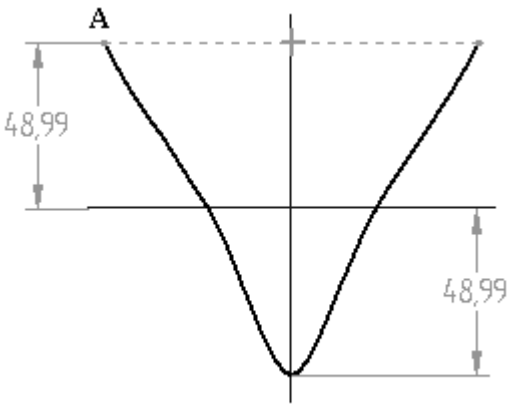

- Add a vertical relationship between control vertex F and the center of the reference planes.

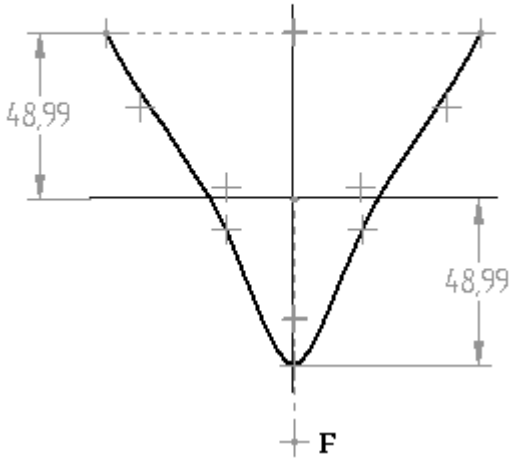

- Apply a final constraint to control vertices. Place two dimensions as shown between the vertical reference plane and control vertices D and E.

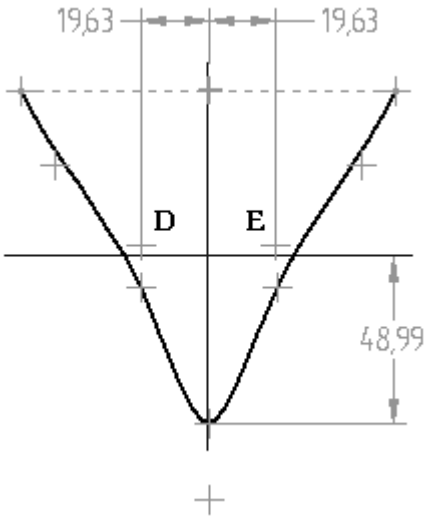

Note

More constraints are needed to make the curve symmetric about the vertical reference plane. For this activity stop adding constraints at this point.

- Edit the dimensions as shown and observe the curve shape constraints.

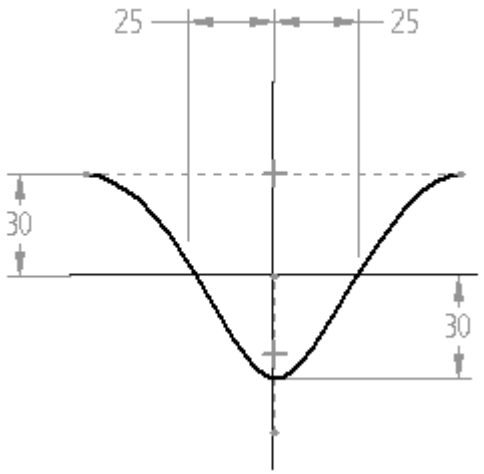

- Drag control vertex F down and observe how the curve shape changes while maintaining the relationships you applied.

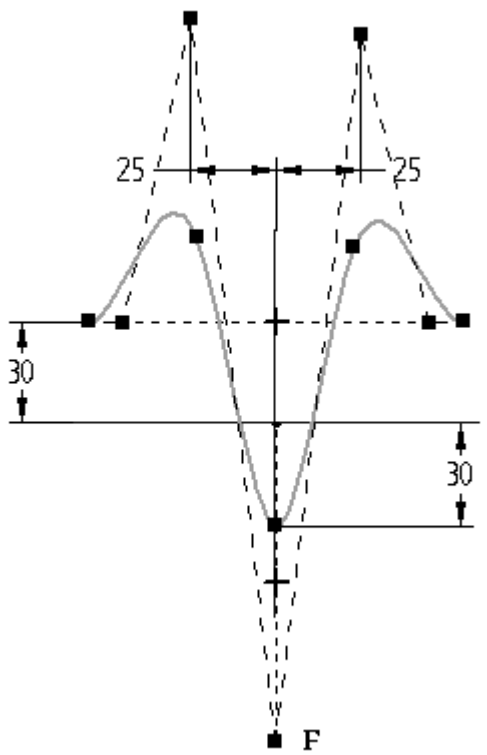

- Save and close the part file.

Summary

In this activity you learned how to draw and edit curves based on edit points and lines.

B Activity: Creating and editing BlueDots

Open *surface lab 2-02.par* .

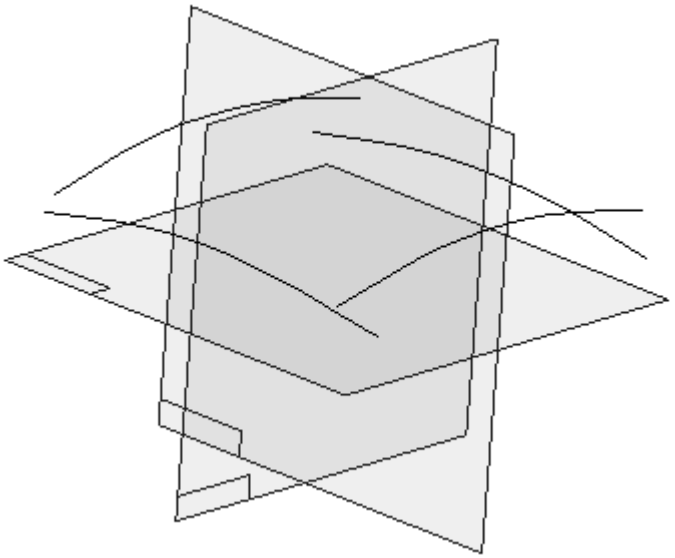

Note

Curves must be connected in order to use them to create surfaces. Only the Swept Surface command does not require input curves to be connected. You will learn more about this in the next lesson.

Note

The order in which you select curves determines which curve will change location. The first curve you select will move to connect to the second curve. The first curve sketch plane will change to the connected location. The second curve you select does not change.

Note

There are several curve selection locations. See the topic on BlueDot Creation in the theory section of this lesson.

Use BlueDots to connect two curves

Experiment with connecting two curves using different selection locations. Remember to undo after each connection to return the curves to their original location.

- Click Surfacing tab® Surfaces group® BlueDot .
- Select curve 1 at the location shown and then select curve 2 at the location shown. Notice the resulting connection and then click Undo.

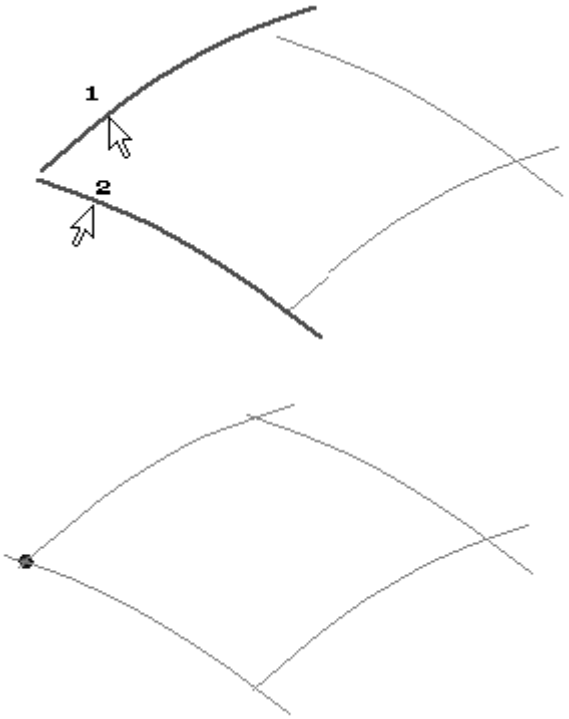

- Click the BlueDot command again. Select curve 1 at the location shown and then select curve 2 at the location shown. You are selecting edit points on the curves. Notice the resulting connection and then click Undo.

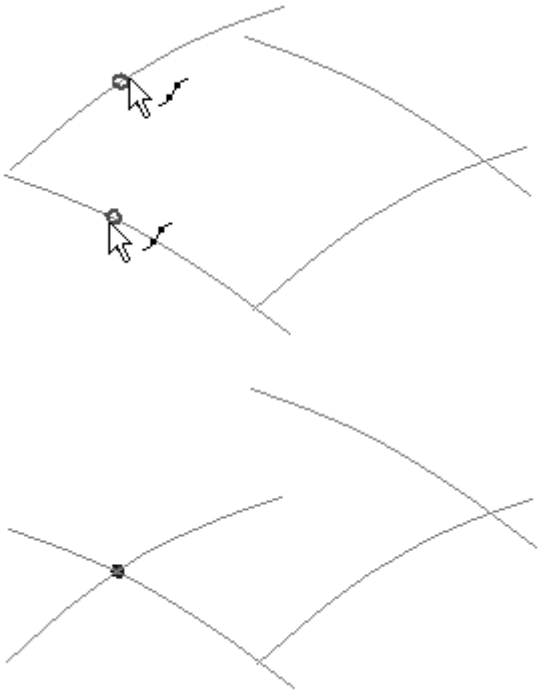

Connect the four curves at the end points

After having experimented with different curve selection possibilities, connect the four curves at the end points.

- Click the BlueDot command and connect the curves in the sequence shown below (1-2, 3-4, 5-6 and 7-8).

Note

Make sure the endpoint connect symbol displays before you click.

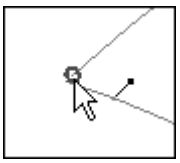

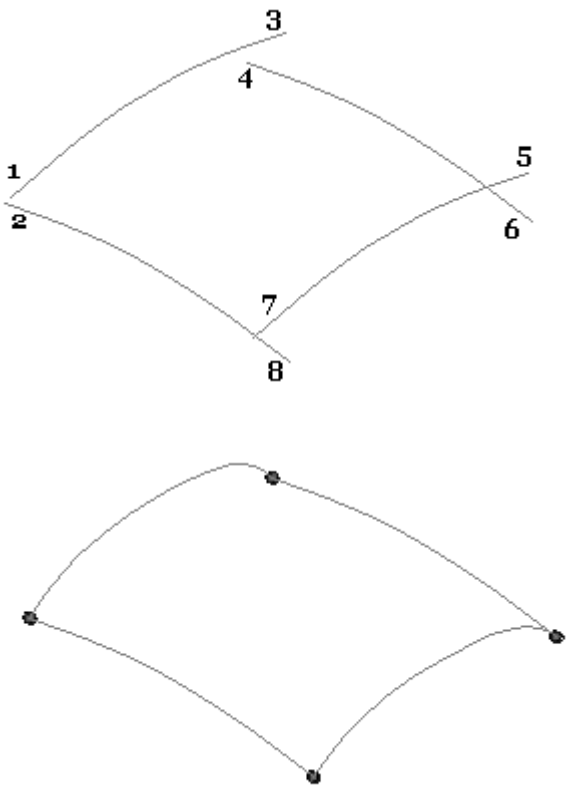

Right-click to finish.

Edit a BlueDot

The four curves are now BlueDot connected. Edit a BlueDot to observe how the curves behave.

- Select the BlueDot shown. Use QuickPick as an aid to select it.

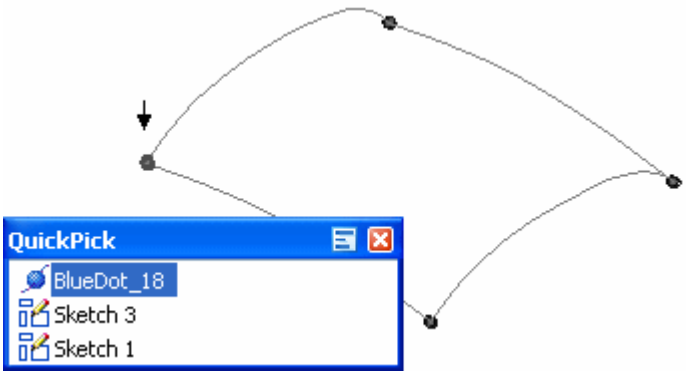

- On the dynamic edit dialog, select Dynamic Edit.

- Click the Z-direction axis on the 3D triad as shown.
  This locks the BlueDot movement to the Z-direction.

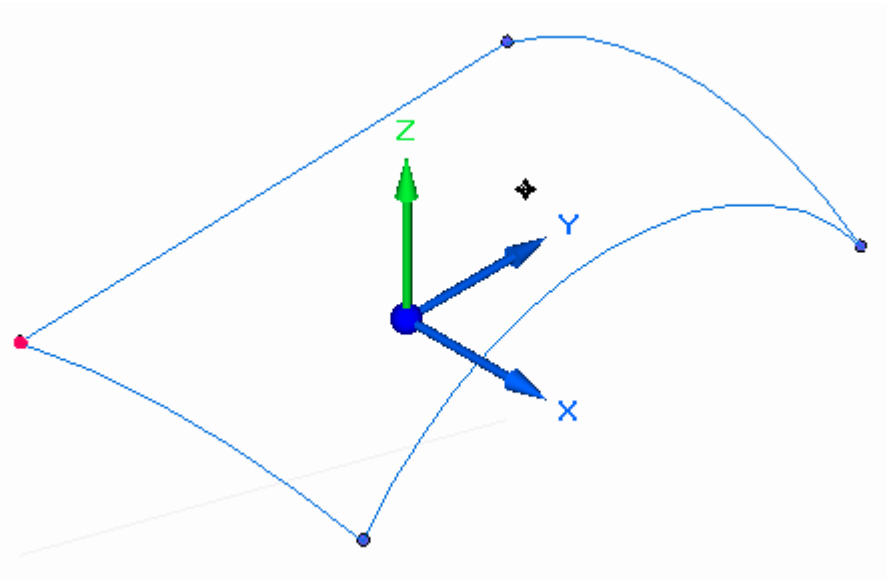

- Edit the BlueDot by dragging it on the screen or by keying in a new Z-coordinate value. Drag the BlueDot a small distance as shown and observe the connected curves' behavior.

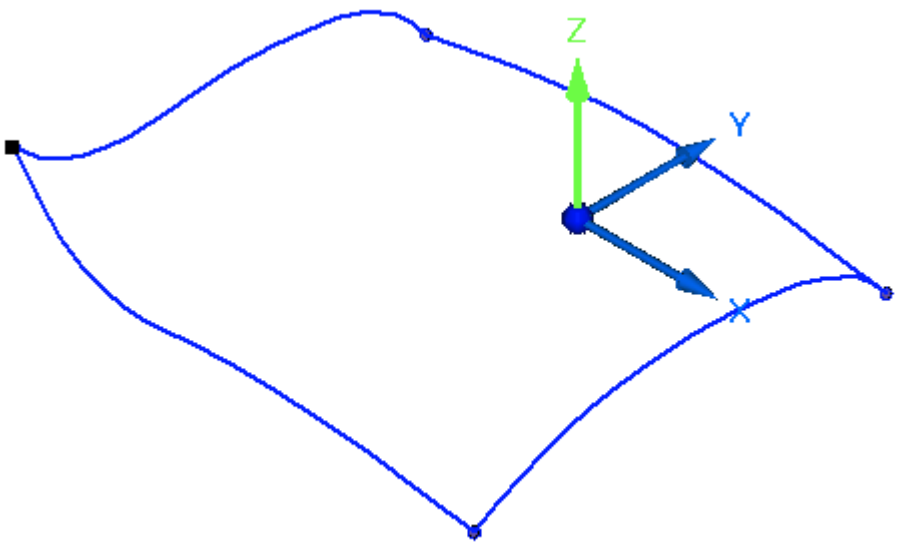

Note

Both curves were set to Local Edit

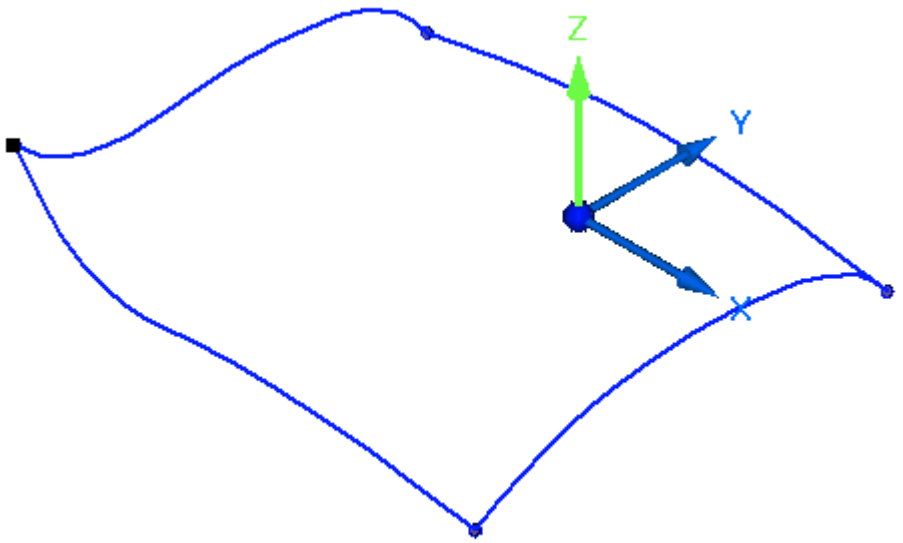

- Click Undo to return the BlueDot to its original location.

- Set both curves to Shape edit and then repeat the previous step. Notice the different result.

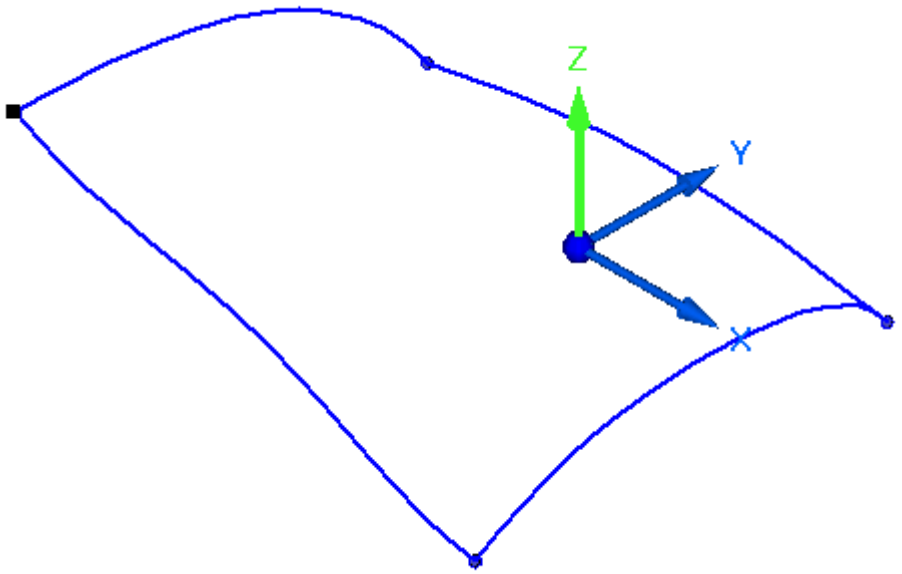

- Click Undo to return the BlueDot to its original location.

- Edit a BlueDot by specifying a delta distance. Repeat the previous step but this time click the Relative/Absolute Position option on the BlueDot Edit command bar.

- Notice that the command bar changes to dX:, dY: and dZ:. Type 20 in the dZ: field and press the Enter key.

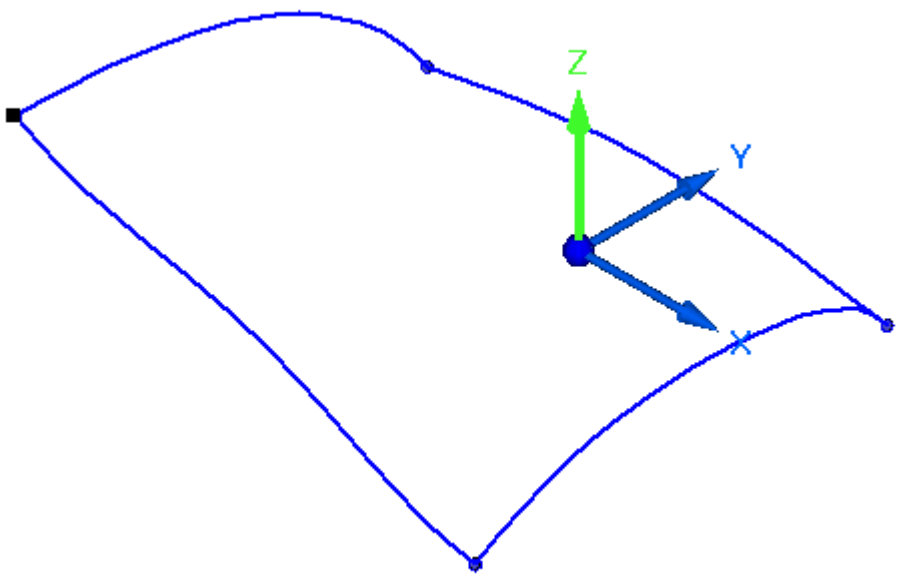

Note

If the Enter key is pressed again, a delta value of 20 will be applied again.

- Click Undo to return the BlueDot to its original location.
- The 3D triad can be moved if it gets in the way. Click the 3D triad as shown and drag to a new location.

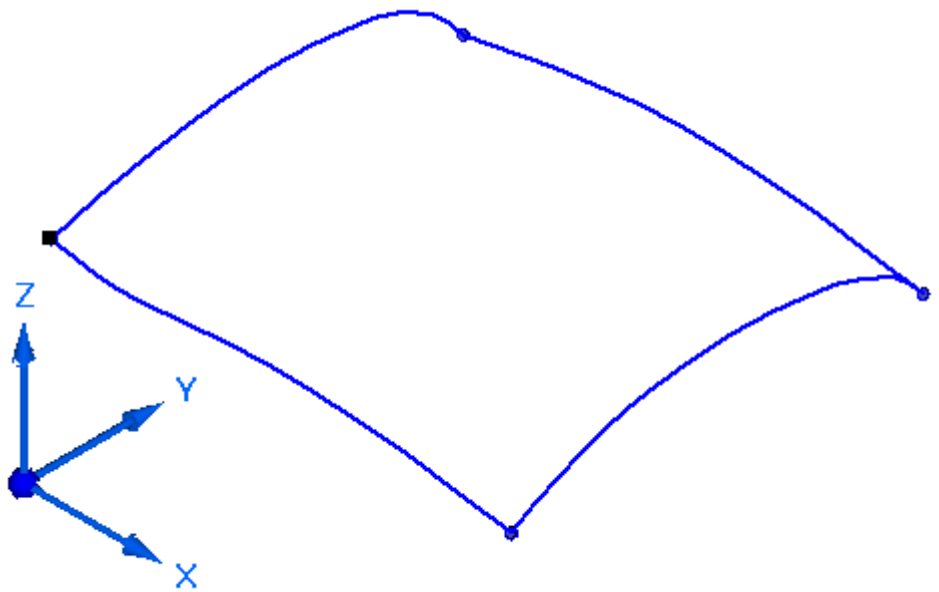

- The activity is complete.

Summary

In this activity you learned how to draw and edit curves based on BlueDots.

C Activity: Creating keypoint curves

Open *surface lab 2-03.par*.

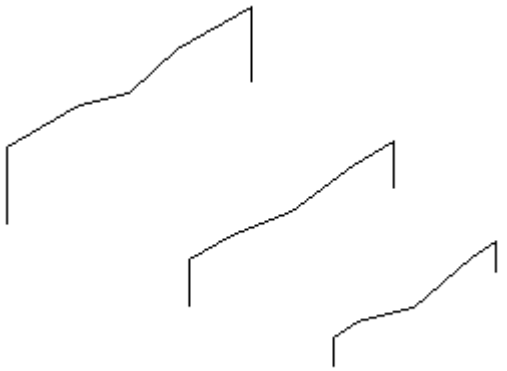

Note

The part file contains three sketches that you will use to create keypoint curves. Each sketch has seven keypoints.

Create a keypoint curve

Create the first keypoint curve using geometry from Sketch A.

- Click Surfacing tab® Curves group® Keypoint Curve .
- Click the endpoint shown. Make sure the endpoint connect symbol displays.

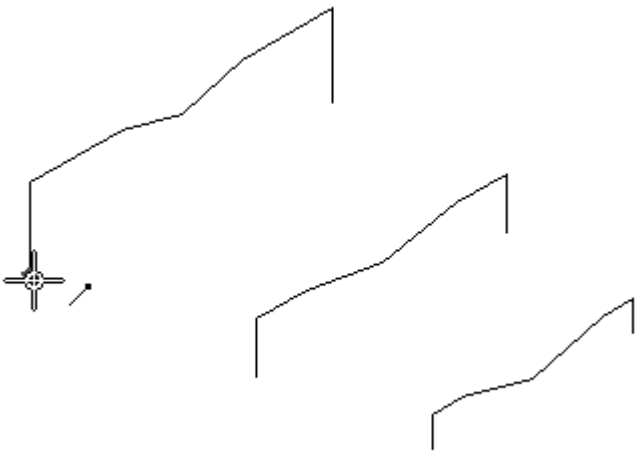

Note

There are other keypoint select locations possible on a line. You can select the endpoints (A), midpoint (B), line and endpoint (C) or line and midpoint (D). If you select a line and endpoint or line and midpoint, the curve will be tangent to the line at that point. You will have the opportunity to modify the tangent vector. For this activity, only select endpoints.

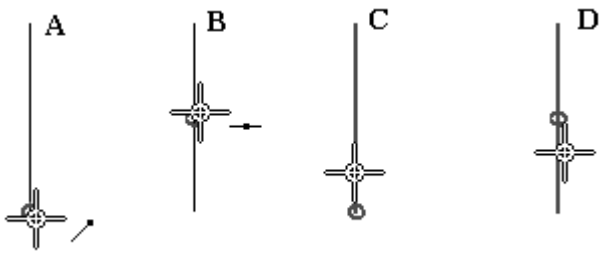

- To make it easier to only select endpoints, on the command bar click the Keypoints button. Select the endpoint option as shown.

- Click the remaining endpoints in the following order.

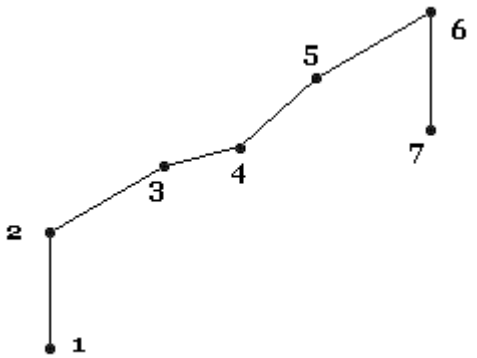

- After clicking the last endpoint, click the Accept button. Then click Finish.

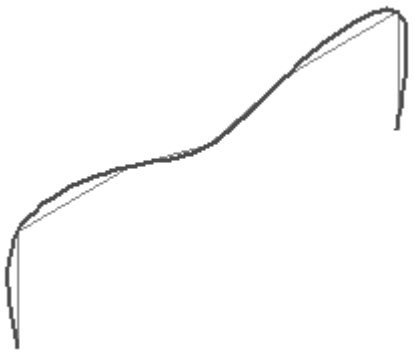

- Repeat the previous step to create keypoint curves using Sketches B and C.

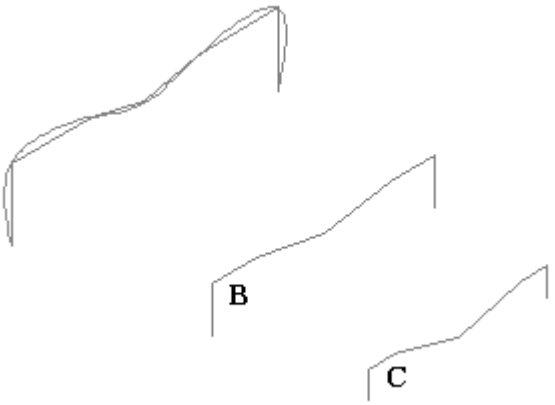

Create keypoint curves between the sketches

Create seven keypoint curves between the sketches. The first curve is shown below and also the completed curves.

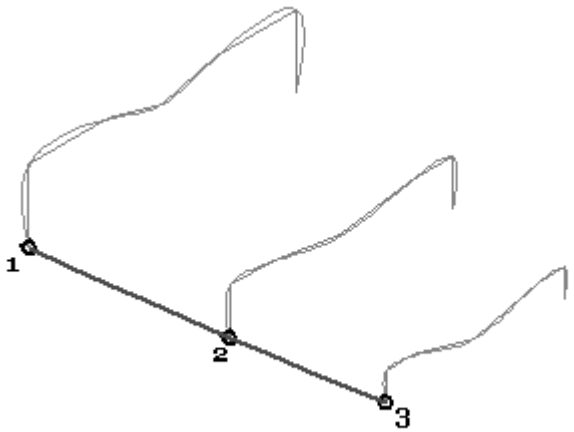

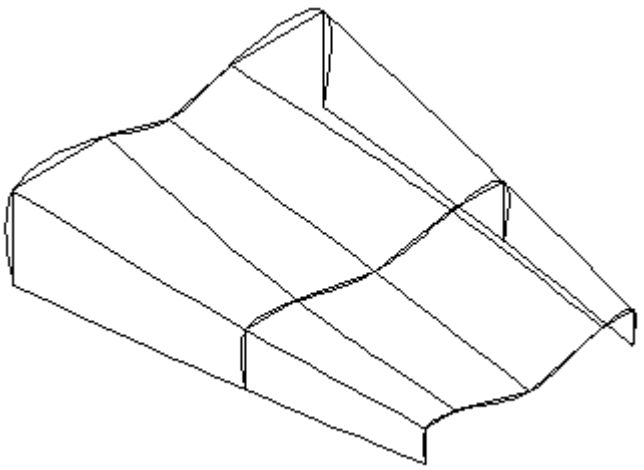

- Right-click in space, then select Hide All® Sketches.

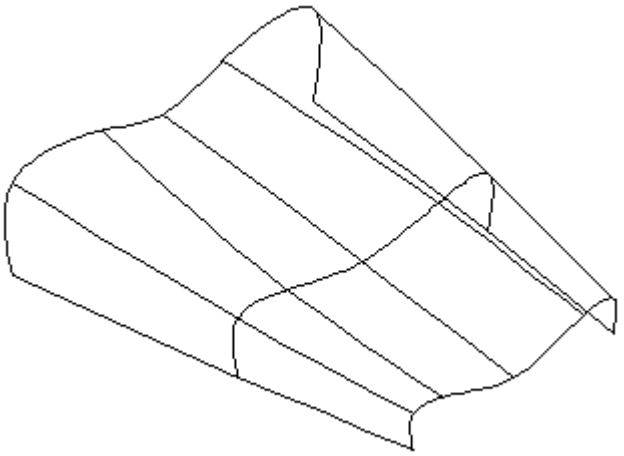

Note

The keypoint curves are not connected to each other. They are only connected to the sketch elements. If you edit one of the sketches used to keypoint connect to, the keypoint curve will change with the edit made to the sketch.

Connect the keypoint curves with BlueDots

Connect the keypoint curves with BlueDots. Once a BlueDot is added, the history of how the curves were created is lost.

- Click the BlueDot command .

- Click keypoint curve 1 and then click keypoint curve 2 as shown.

Note

Make sure no keypoints display when selecting the curves to BlueDot connect. Just click on the curve away from any possible keypoint.

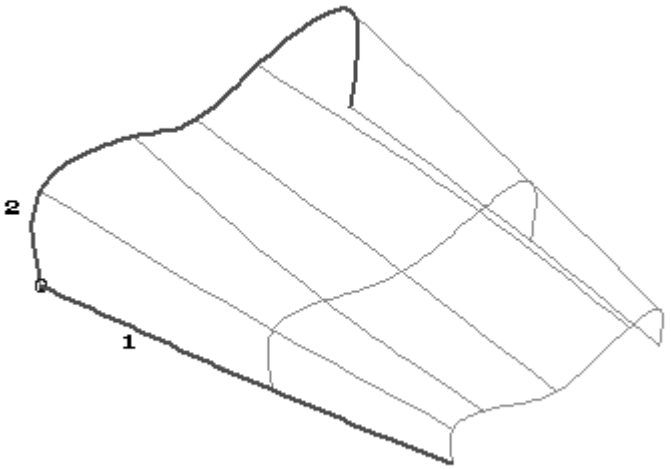

- Continue placing the remaining BlueDots. There will be a total of 21 BlueDots. In case of a mistake, click the Undo command.

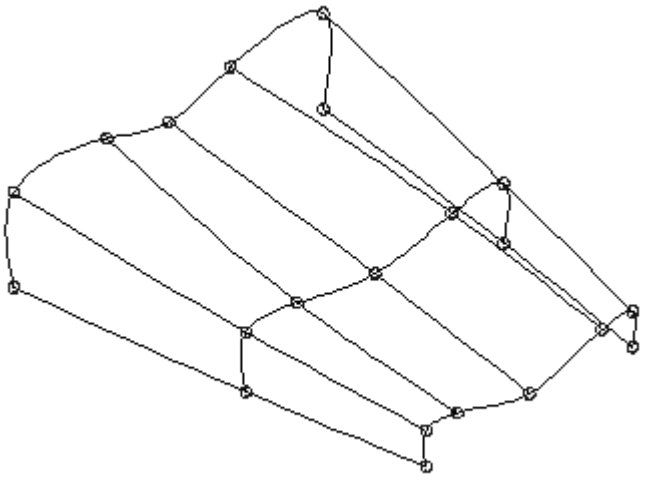

Edit a BlueDot

Edit a BlueDot and observe how the keypoint curves behave.

- Click the Select tool.

- Select the BlueDot shown.

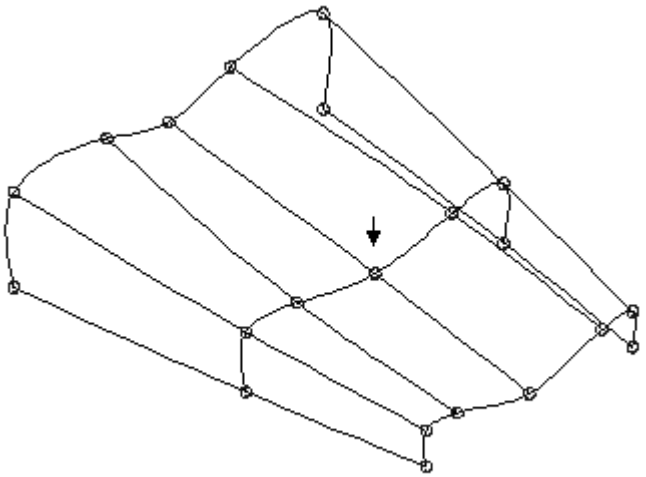

- Click Dynamic Edit.
- Click the Z-direction on the 3-D triad.
- Drag the BlueDot up and notice how the two keypoint curves remain connected.

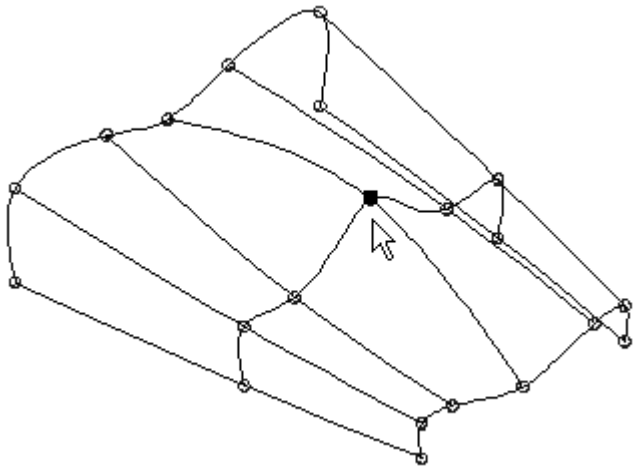

Note

Notice in the BlueDot Edit command bar that curve edit fields are grayed out. Keypoint curves cannot be controlled with local or shape edits.

- Click the Select tool. Right-click in the part window. Choose Hide All® BlueDots and Hide All® Curves.

Include tangency on keypoint curves

Create two keypoint curves that include a tangency vector.

- Click the Select tool.
- In PathFinder, select the boxes next to features Extrude 4 and Extrude 5.
- Create keypoint curves between these two surfaces that are tangent to an edge of each surface. Click the Keypoint Curve command.
- Select the edge of the surface as shown. Make sure the line and endpoint are highlighted.

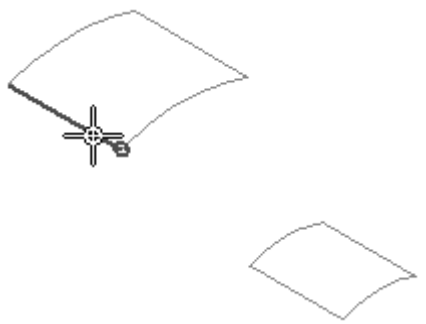

- Select the edge of the surface as shown. Make sure the line and endpoint are highlighted.

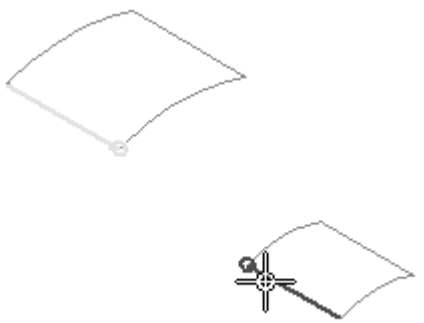

- Click the Accept button.

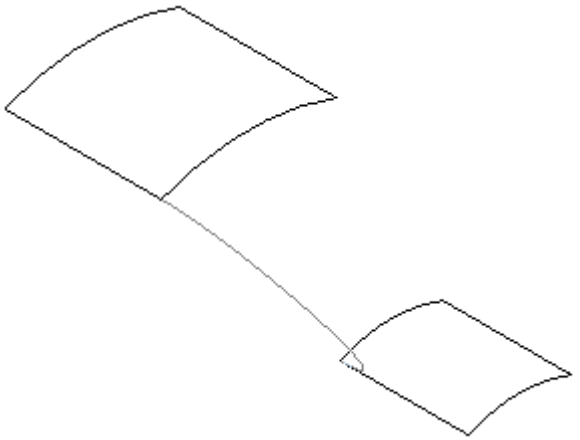

- Click the End Conditions Step.

Note

Notice the green dot and line on each surface edge. These are the tangency vectors. The keypoint curve is tangent to the surface edge. By dynamically dragging the green dot, the curve changes shape while remaining tangent.

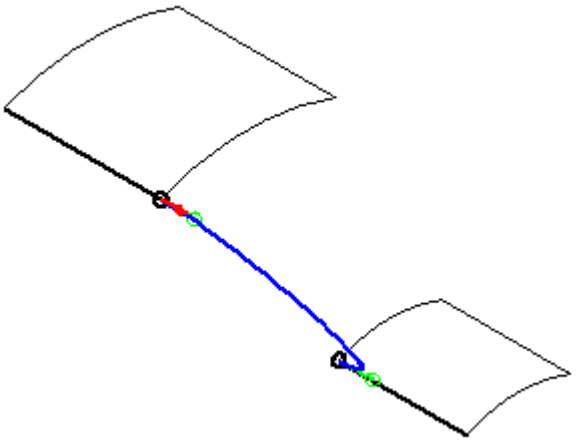

- Drag the tangency vectors as shown.

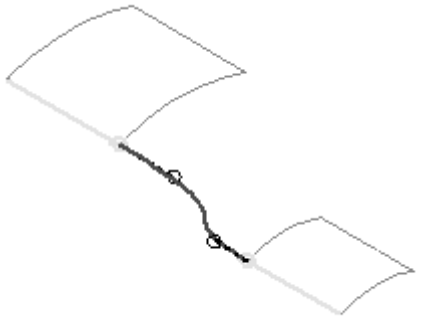

- Click Preview and then click Finish.
- Create another keypoint curve on the opposite edges of the surfaces.

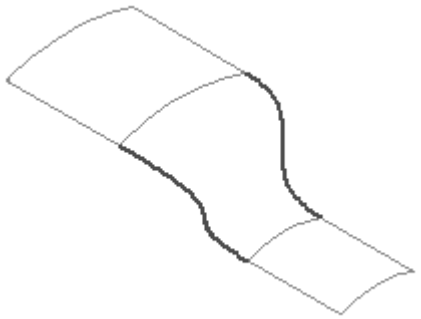

Note

You will learn in the next lesson that the two keypoint curves you just created are a step in the process of constructing a tangent transition surface between two surfaces. The activity is complete.

Summary

In this activity you learned how to create and edit keypoint curves.

D Activity: Additional curve creation methods

Open *surface lab 2-04.par*.

Note

In order to create curves in this activity, existing construction surfaces are needed. Since you have not yet learned how to create surfaces, the surfaces needed in the activity have already been created for you.

Create an Intersection curve

- In PathFinder, select the display boxes next to features BlueSurf 1 and Extrude 1.
- Right-click in the part window and Hide All® Reference Planes.

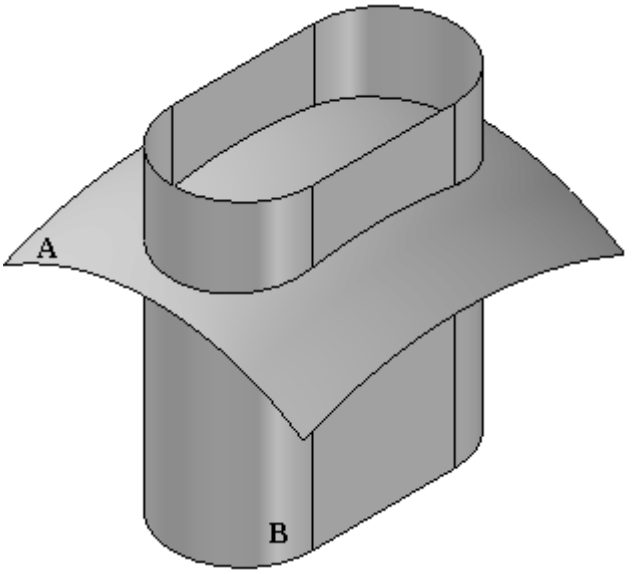

- Create a curve where construction surfaces A and B intersect. Select Surfacing tab® Curves group® Intersection Curve .
- In the command bar, set the Select filter to Feature.
- Select surface A, and then click the Accept button.
- Select surface B, and then click the Accept button.

- Click Finish.

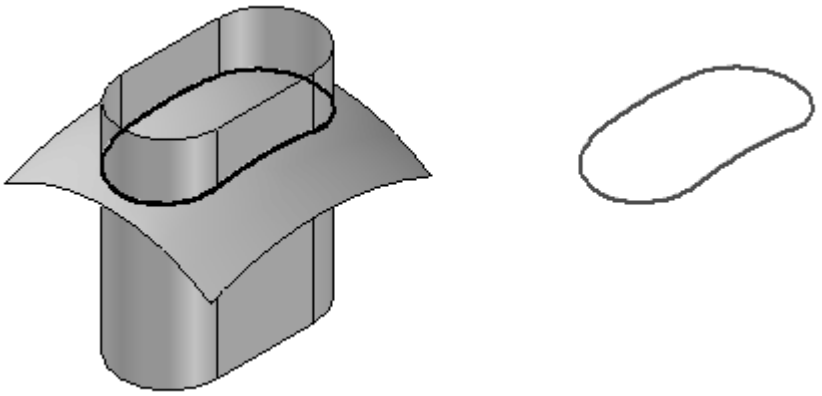

Note

Notice in PathFinder the intersection curve just created is named Intersection 2.

Note

The intersection curve is associative to the two input surfaces it was created from. These surfaces are the intersection curve's parents. If a parent is edited, the intersection curve will update automatically.

You will see in the next lesson how you can use the intersection curve in surface editing operations.

- Hide the following features in PathFinder: *BlueSurf1*, *Extrude1* and *Intersection 2*

Create a Cross Curve

A cross curve is an intersection curve that is created with the theoretical extruded surfaces resulting from the two input curves/analytics.

- In PathFinder, show the following sketches: *Sketch 2a* and *Sketch 2b*.

- Select Surfacing tab® Curves group® Cross Curve.

- Click sketch A and then click the Accept button. Click sketch B and then click the Accept button.

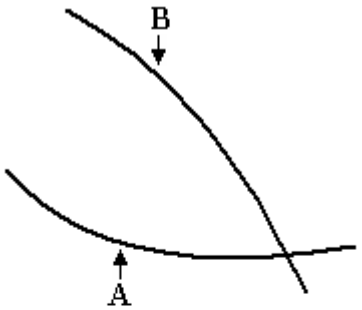

- Click Finish.

  The cross curve is the result of the intersection of the two theoretical extruded surfaces A and B.

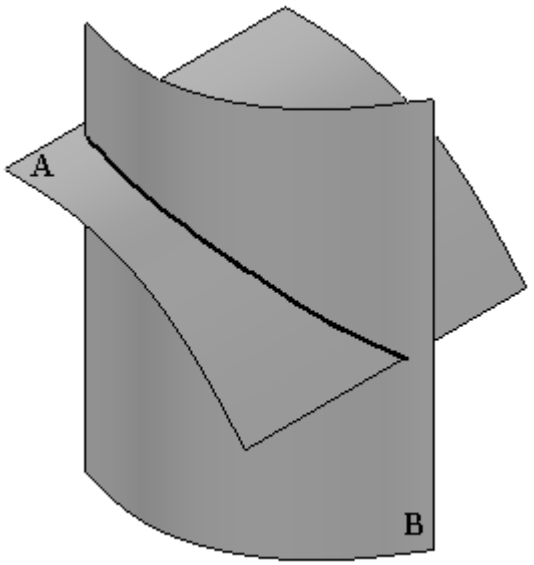

Note

The Cross Curve command eliminates the need to construct extruded surfaces from curves and then find the intersection between the two surfaces.

- Hide the sketch curves and cross curve: *Sketch 2a*,*Sketch 2b* and *Cross Curve 8*.

Use Project Curve

This command takes a curve and projects it onto a surface.

- Show the following features in PathFinder: *BlueSurf 2* and *Sketch 3c*.

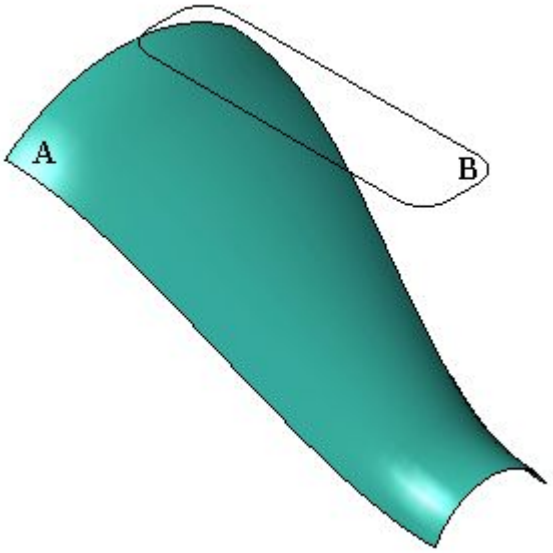

- Project curve B onto surface A. Select Surfacing tab® Curves group® Project Curve .

- Click the Options button.

- The default option is Along vector. The curve will be projected along its normal vector. Click OK.

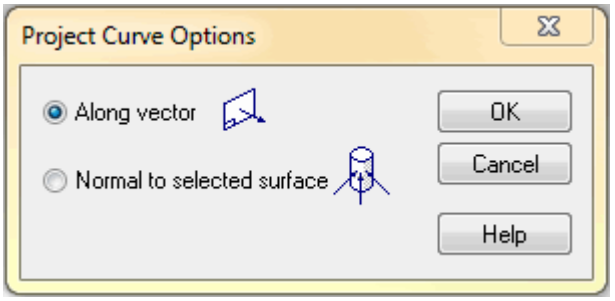

- Select curve B and then click the Accept button.

- Select surface A and then click the Accept button.

- For the direction vector, point the direction arrow down as shown.

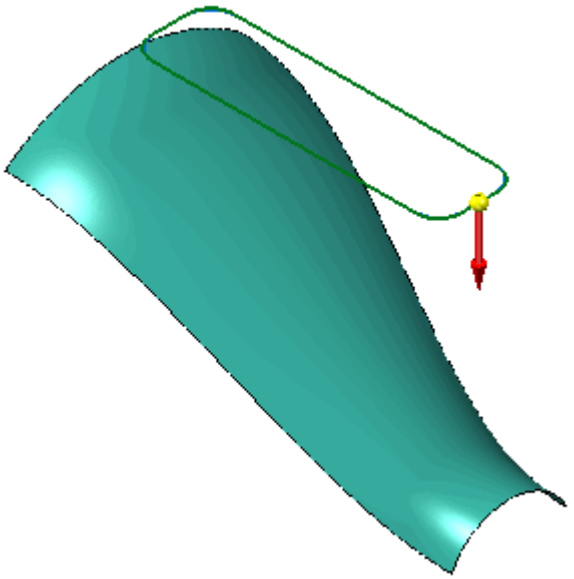

- Click Finish.

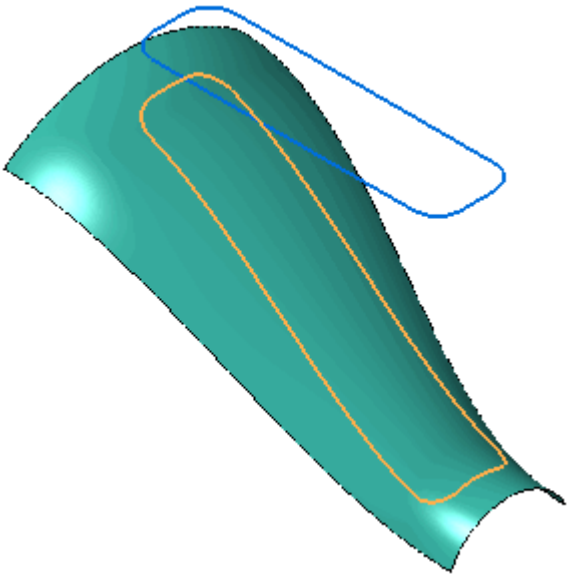

- Click the Select tool. In PathFinder, select the Projection feature and press the <Delete> key.
- Project the curve normal to the surface. Click the **Project Curve** command.
- Click the Options button.

- Click the Normal to selected surface option and click OK.

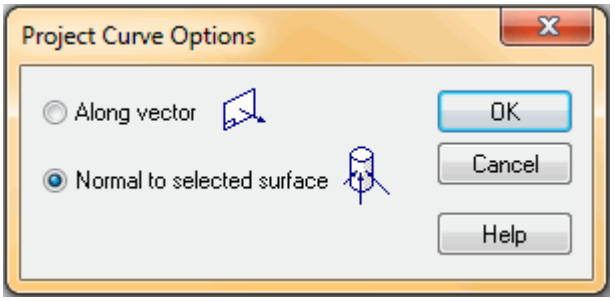

- Click the curve and then click the Accept button.
- Click the surface and then click the Accept button. Click Finish. Notice the different results

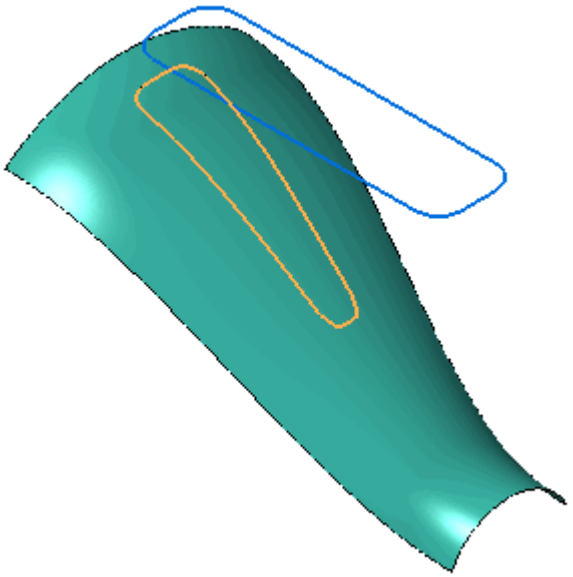

- Hide the features *BlueSurf 2* , *Sketch 3c* and *Projection 9*.

Create a Contour Curve

- In PathFinder, show the feature *BlueSurf 2*.

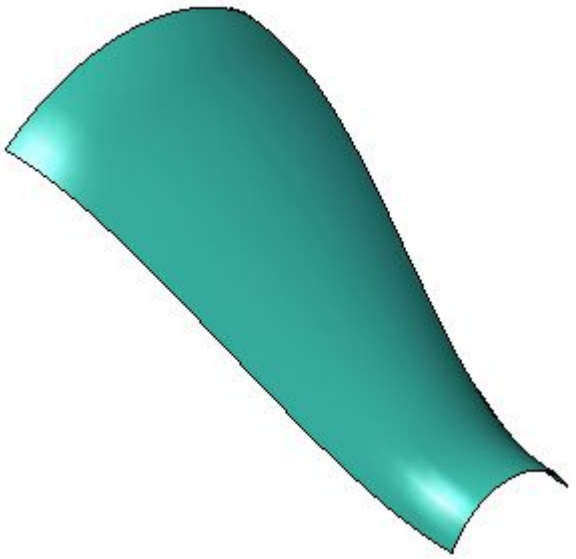

- Click the Select Surfacing tab® Curves group® Contour Curve .
- Click the surface and then click the Accept button.
- Click on the surface to place the six contour curve points approximately as shown. Points 1 and 6 are on the edge. Points 2–5 are on the face.

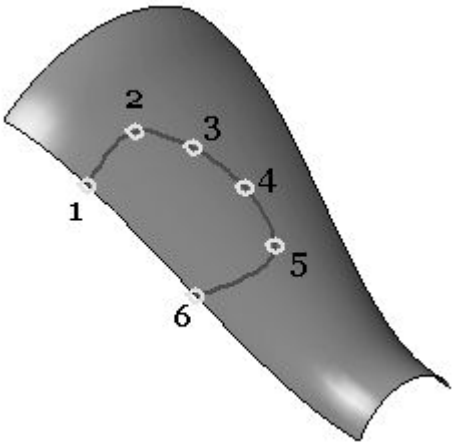

Note

To insert points on an edge, in the command bar Select box click *Edges*. To insert points on the face, in the command bar Select box click *Face*.

- After placing the last point , click the Accept button. Click Finish.

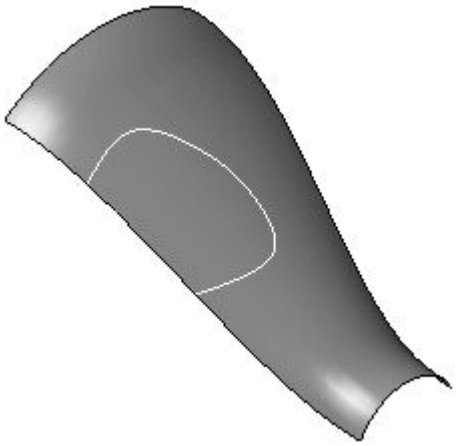

Edit the shape of the contour curve

- Click the Select tool.
- In PathFinder, choose the contour curve feature, and select *Edit Definition*.

  Note

  The shape can be edited while creating the contour curve.

- Click the Draw Points Step.

- Click the points shown and drag to edit the shape approximately as shown. Points 1 and 6 will remain attached to the edge. Points 2–5 can be moved anywhere along the face.

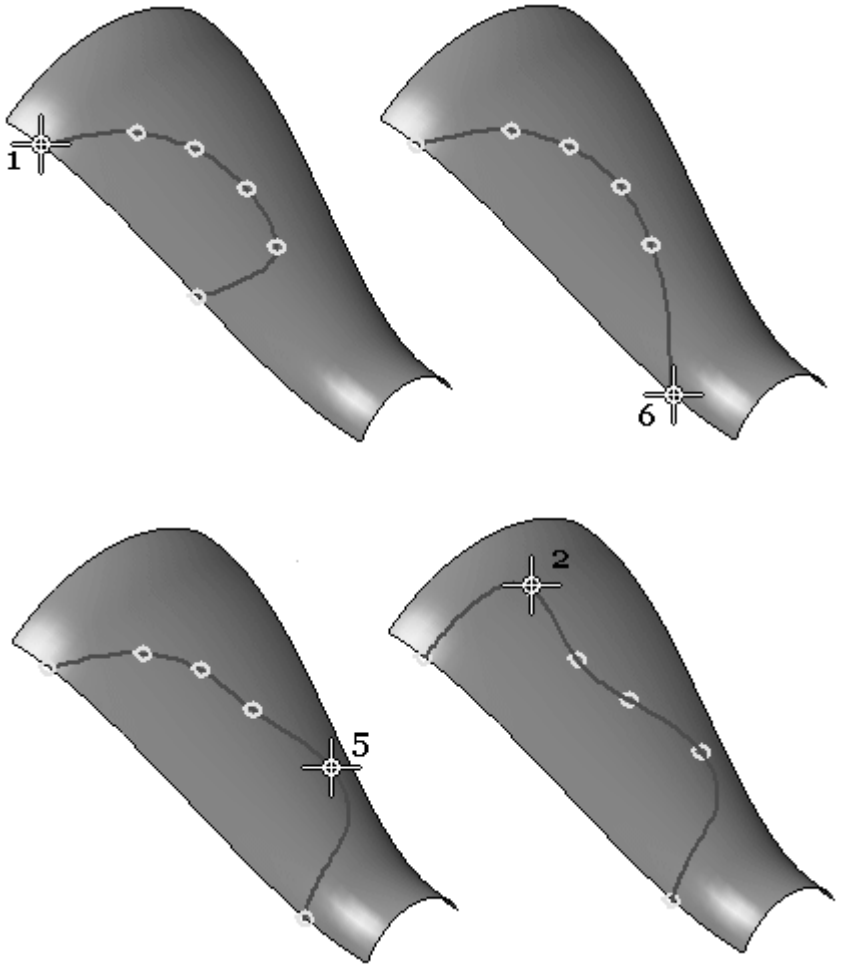

- Click the Accept button and then click Finish.

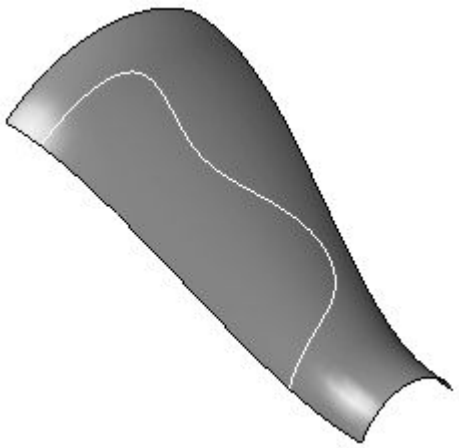

- Hide the two features *BlueSurf 2* and *Contour Curve 2*.

Use the Derived Curve and Split Curve creation methods

- In PathFinder, show *BlueSurf 1*.

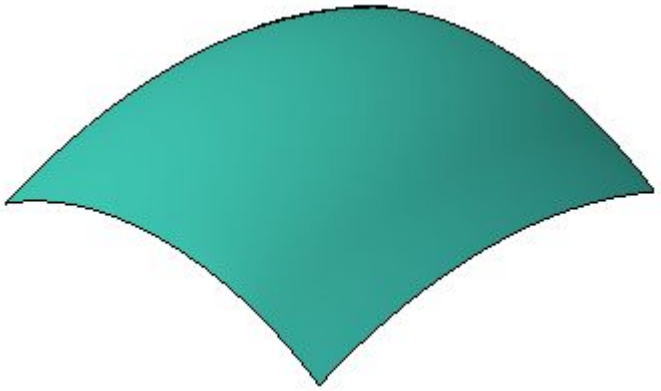

- Create derived curves from the four edges of the surface. Split the derived curves that would be used to create additional surfaces. No surfaces will be created in this activity.

  Select Surfacing tab® Curves group® Derived Curve .

- Click the edge shown, and then click the Accept button.

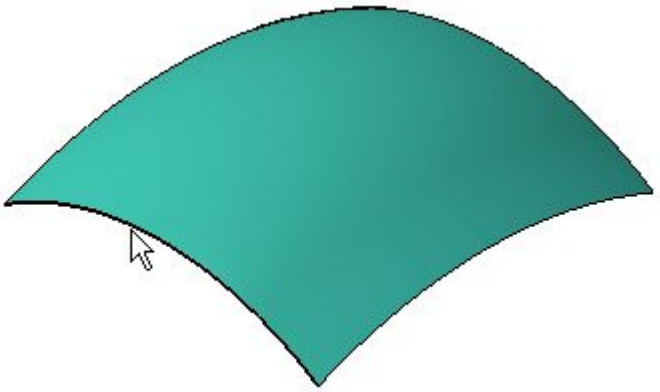

- Click Finish.

- Repeat the above step to create derived edges for the three remaining surface edges.

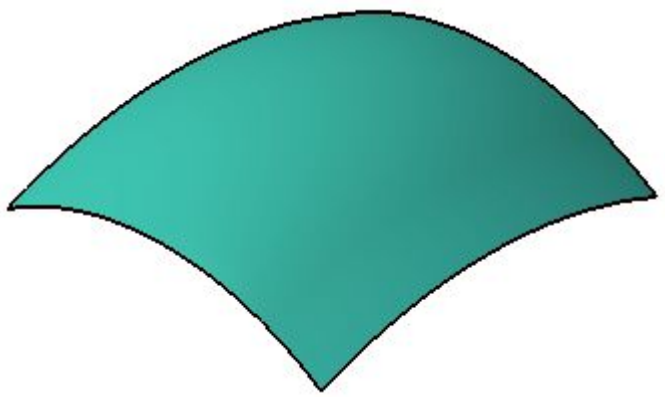

- Click the Select tool. Hide the surface.

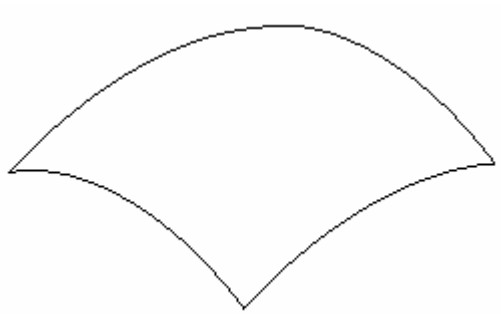

- In PathFinder, show the *Base Reference Planes*.
- Select Surfacing tab® Curves group® Split Curve.

- Select the derived curve shown, and then click the Accept button.

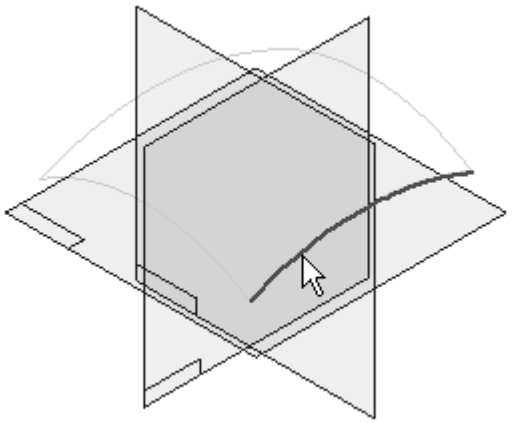

- On the Split Curve command bar, set the Select filter to *Body*.

- Click the reference plane shown.

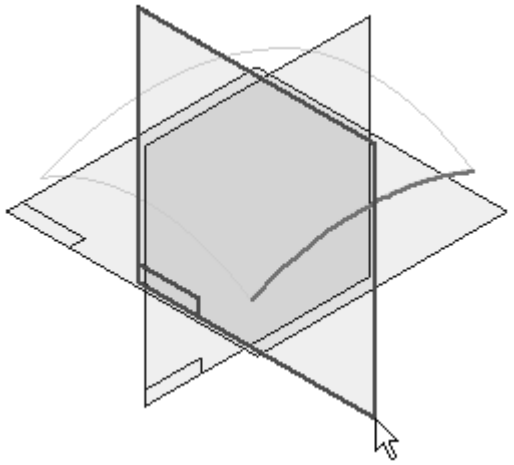

- Click the Accept button, and then click Finish.

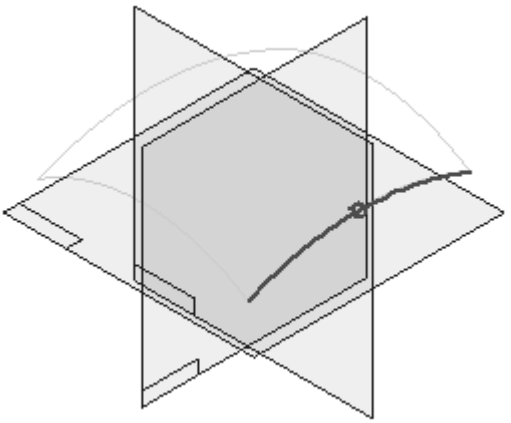

Notice the original derived curve is now split and there are two new curves that can be used for surfacing operations.

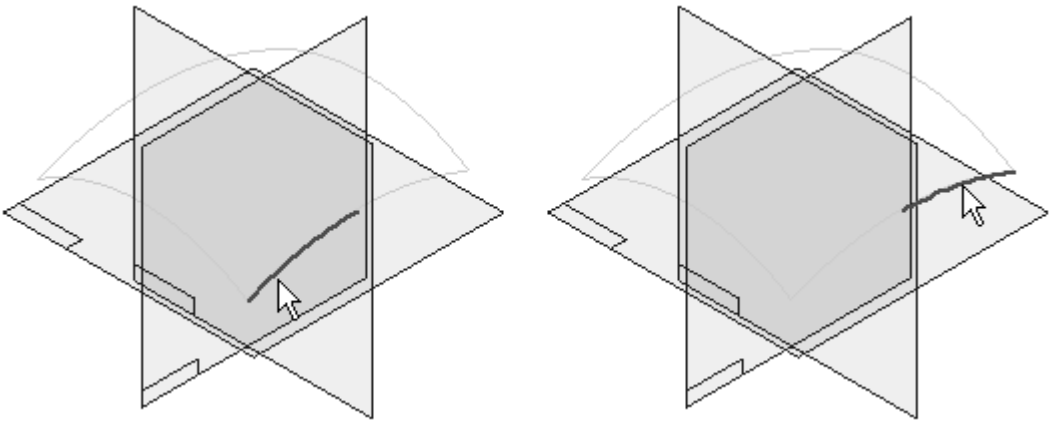

- Repeat the previous step to split the remaining three derived curves.

  The following image shows a new surface created using the split curves.

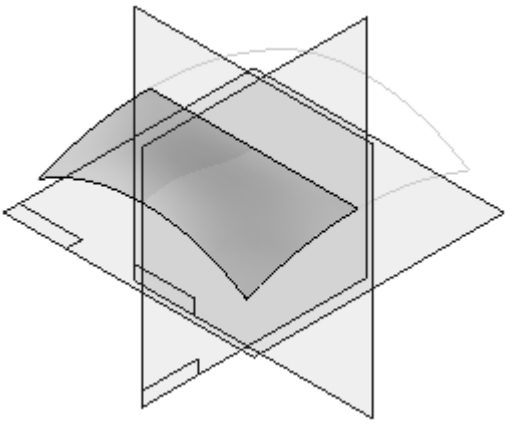

Note

The BlueSurf construction method was used to create the surface above. You will learn how to create BlueSurfs in an upcoming lesson.

- The activity is complete. Exit and Save the file.

Summary

In this activity you learned how to create curves using several additional methods.

E Activity: Creating and editing simple surfaces

Open *surface lab 3-01.par*.

Create an extruded surface

- In PathFinder, show *Sketch A*.

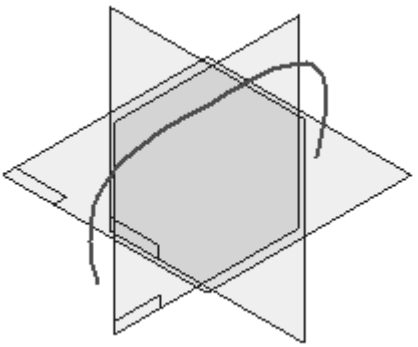

- Select Surfacing tab® Surfaces group® Extruded Surface .
- Click Select from Sketch.

- Click the sketch curve shown and then click the Accept button.

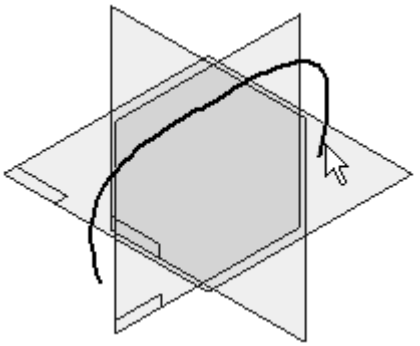

- Click the Symmetric Extent button and type 150 in the Distance field .
- Click Finish.

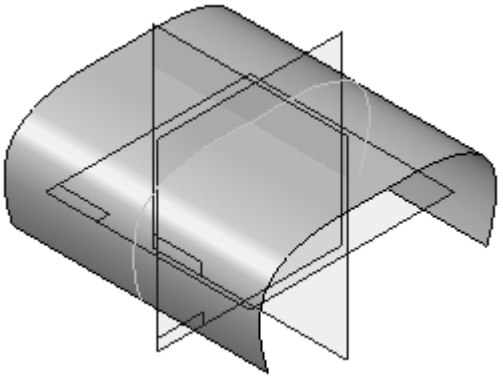

Modify the shape of the extruded surface

- Click the Select tool.
- In PathFinder, hide *Base Reference Planes*.
- Select the extruded surface and then click the Dynamic Edit button .
- Click the sketch curve. Use the curve Local Edit option and drag the edit point shown. Drag the edit point around slightly and notice how the surface shape changes.

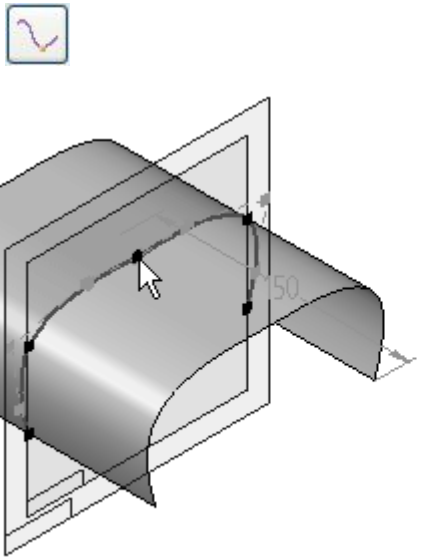

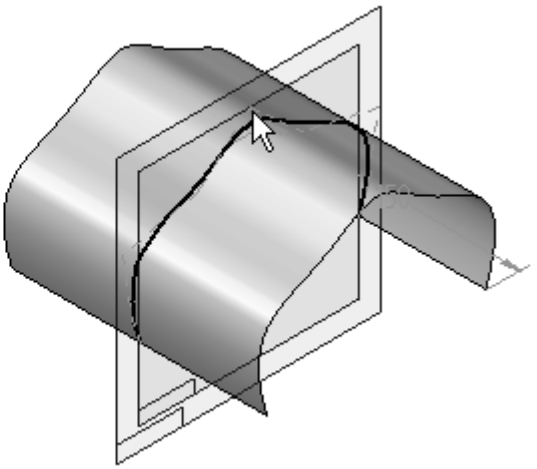

- Click the Select Tool to end the dynamic edit.

- In PathFinder, hide the features *Sketch A* and *Extrude 3*.

Create a revolved surface

Note

The Revolved Surface command has the same steps as the Revolve command.

- Show *Sketch B*.

- Select Surfacing tab® Surfaces group® Revolved Surface .

- Click Select from Sketch.

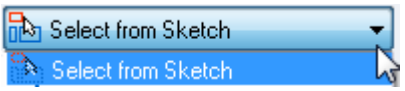

- Select the sketch curve shown and then click the Accept button on the command bar.

- Notice on the Revolved Surface command bar that the next step is to define the axis of revolution. Click the line as shown.

- For the extent step click the revolve 360° button.

- Click Finish.

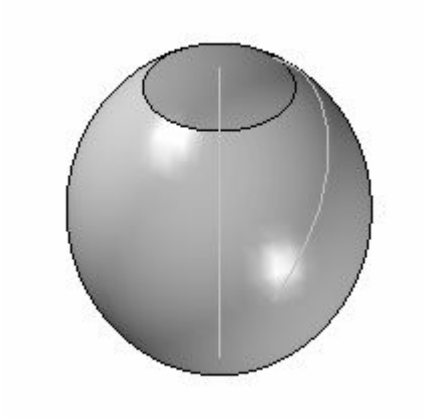

Edit the shape of the revolved surface

- Click the Select tool.
- Press Ctrl-R to rotate the view to a right view.
- Select the revolved surface and then click the Dynamic Edit button .

- Select the sketch curve. Use the curve *Local Edit* option and drag the edit point shown. Drag the control vertex point around slightly and notice how the surface shape changes.

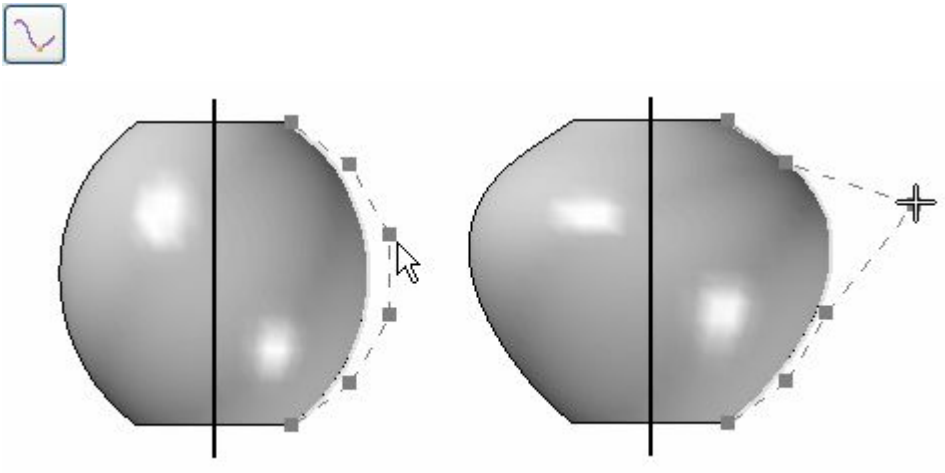

- Drag the control vertices around to come up with your own surface shape.
- This concludes the activity.

Summary

In this activity you learned how to create simple surfaces using Extrude and Revolve, and how to edit those by manipulating their parent curves.

F Activity: Creating a swept surface

Open *surface lab 3-02.par*.

The part file contains four sketches. Sketch element A is the guide path (curve) and sketch elements 1-3 are the cross sections (arcs).

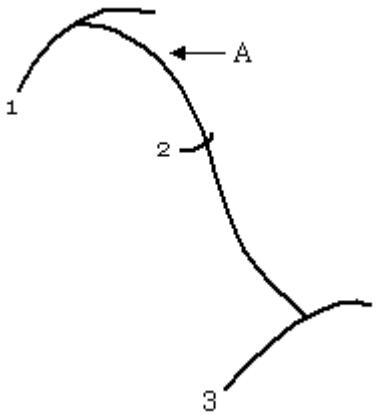

Note

The Swept Surface command has the same steps as the Swept Protrusion command.

Create a swept surface

- Select Surfacing tab® Surfaces group® Swept Surface .

  On the Sweep Options dialog box, click the *Multiple paths and cross sections* button. Click OK.

- For the Path step, select the curve shown and then click the Accept button.

- Since there is only one path, click the *Next* button on the command bar to proceed to the Cross Section step.
- Select cross section 1 and then click the Accept button. Select cross section 2 and click the Accept button. Select cross section 3 and click the Accept button.

- On the command bar, click *Preview* and then *Finish*.

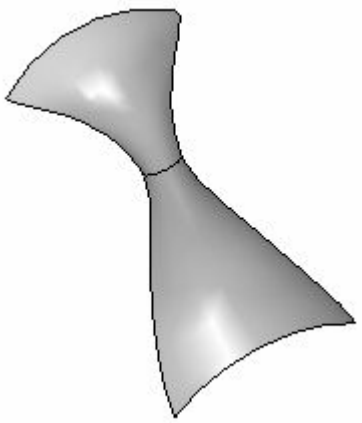

Modify the shape of the surface

- Click the Select Tool. Select the surface and then click Dynamic Edit .
- Click the 70 mm radius dimension on cross section 1. Type 50 and press the <Enter> key.

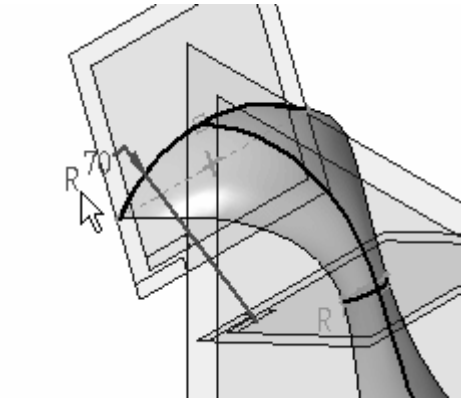

- Click the 10 mm radius dimension on cross section 2. Type 40 and press the <Enter> key.

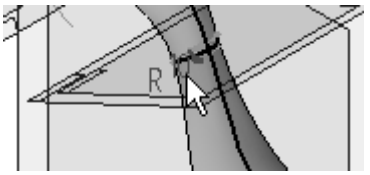

- Click the 60 mm radius dimension on cross section 3. Type 20 and press the <Enter> key.

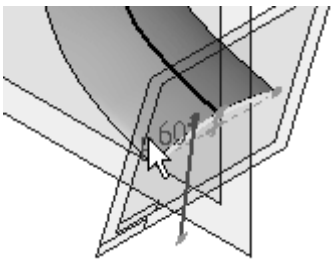

- Click the Select tool to end the dynamic edit.

Dynamically edit the path curve

- Click the Select Tool. Select the surface and then click Dynamic Edit .
- Click the path curve as shown.

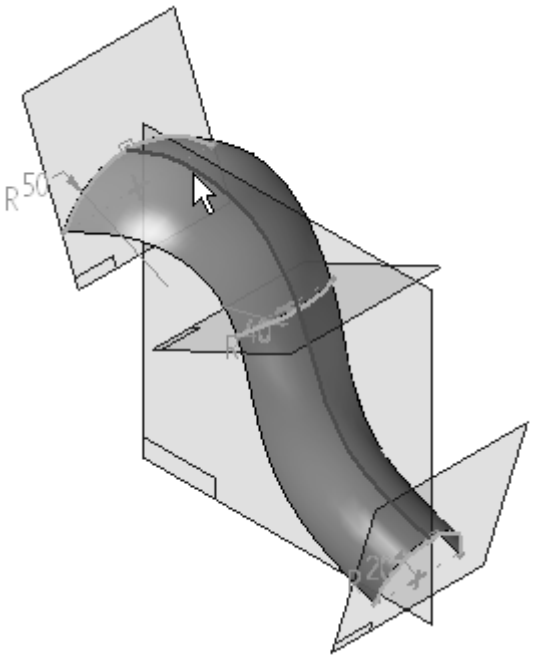

- Select the edit point shown and drag to the right.

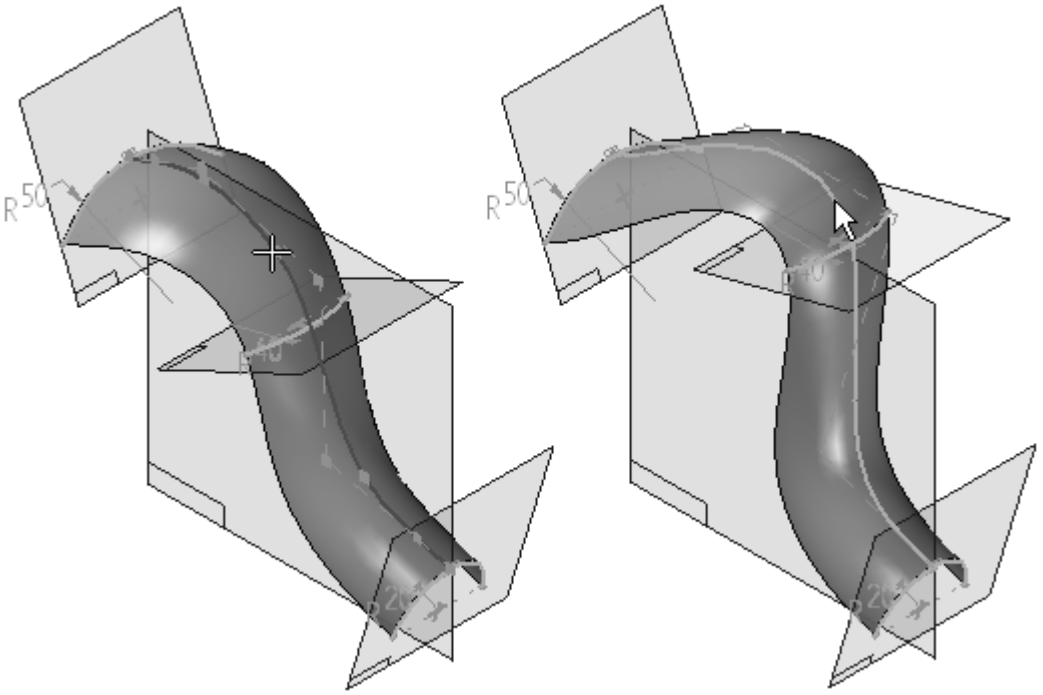

- The activity is complete.

Summary

In this activity you learned how to create and edit a swept surface.

G Activity: Creating a BlueSurf using analytics

Open *surface lab 3-03.par*.

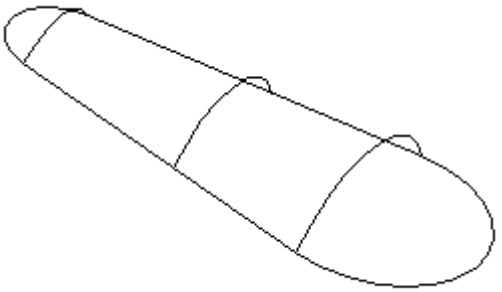

Create several BlueSurf features

- Select Surfacing tab® Surfaces group® BlueSurf .

  Notice on the BlueSurf command bar that the Cross Section Step is active.

- To define the first cross section, click the arc shown and then right-click (or click the Accept button).

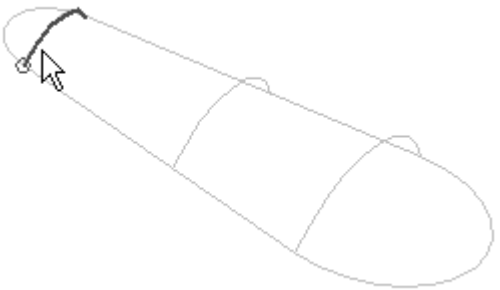

- For the next cross section, click the arc shown and then right-click.

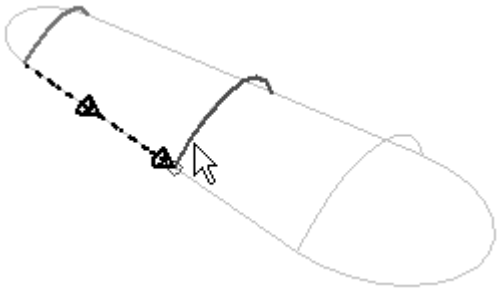

- For the last cross section, click the arc shown and then right-click.

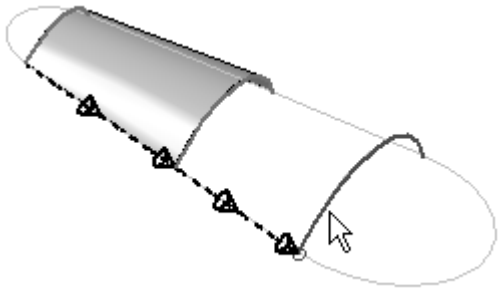

- Click Preview and then click Finish.

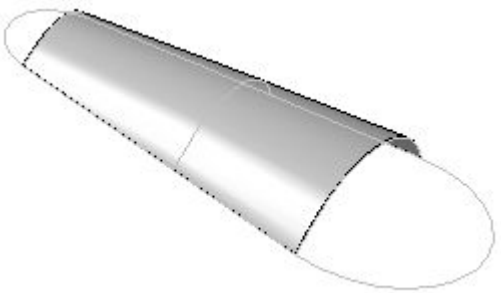

Notice the BlueSurf feature shown in PathFinder; hide this feature.

Create another BlueSurf

- Click the BlueSurf command.
- For the first cross section, select the point shown.

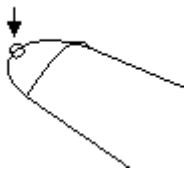

- Click the arc shown for the second cross section and then right-click.

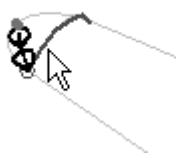

- Click the arc shown for the last cross section and then right-click.

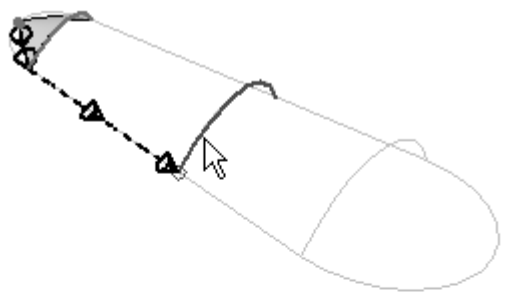

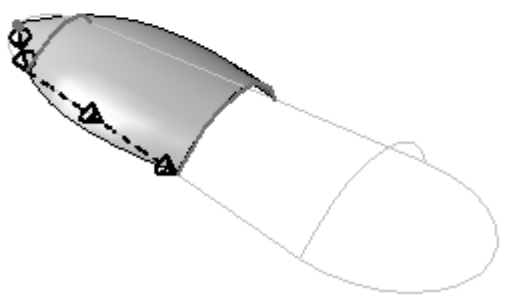

- Click Preview. Do not click Finish.
- Apply guide curves to the BlueSurf. Click the *Guide Curve Step* on the command bar.

- In the command bar Select list, click *Single*. This allows you to select single sketch elements for the guide curve.

- Select sketch elements 1 and 2 as shown and then right-click to complete the first guide curve.

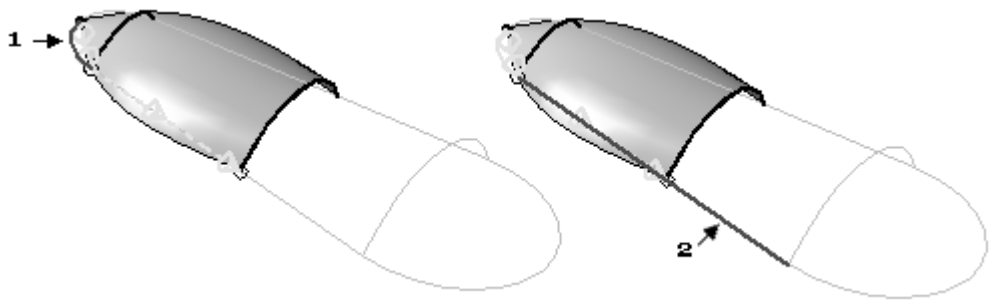

Note

Notice how the BlueSurf follows the guide curve.

- Select sketch elements 3 and 4 as shown and then right-click to complete the second guide curve.

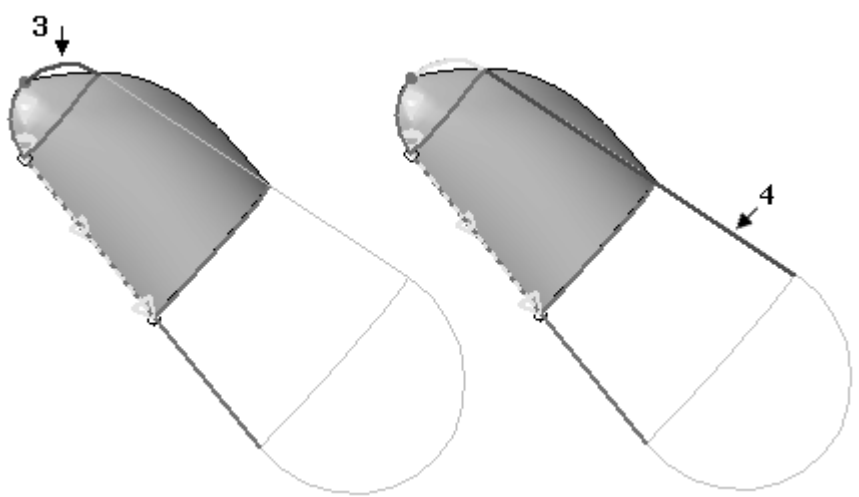

- Click Preview and then Finish.

- Hide this second BlueSurf feature.

Create a third BlueSurf

- Click the BlueSurf command.
- Click the point shown.

- Click the cross section shown and right-click.

- Click the point shown and then right-click .

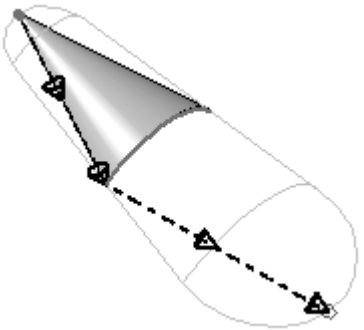

- Click the *Guide Curve Step*.

- In the command bar Select list, click *Single*.
- Select sketch elements 1 – 3 as shown and then right-click. Select sketch elements 4-6 as shown and then right-click.

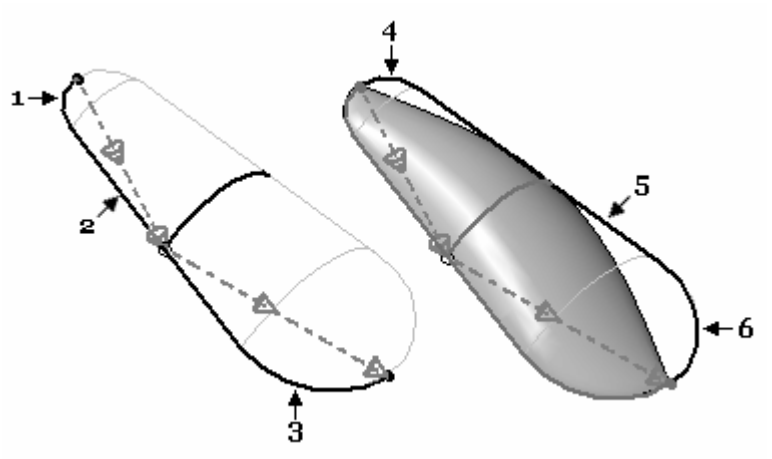

- Click *Preview* and then click *Finish*.

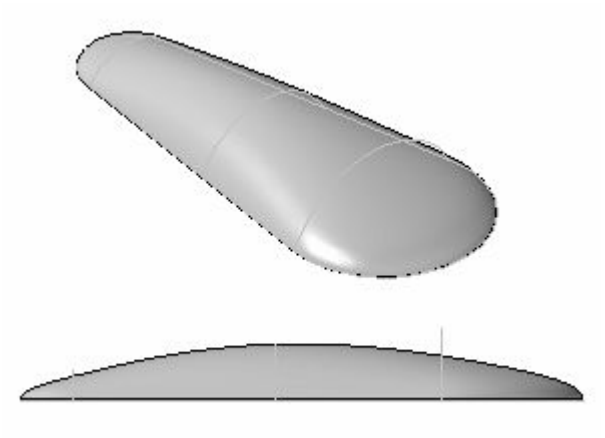

Add cross sections to the BlueSurf

- Click the Select tool and then select the BlueSurf feature.
- Click Edit Definition.

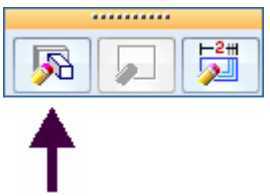

- Click the Cross section Step.

- Click the cross section shown and right-click.

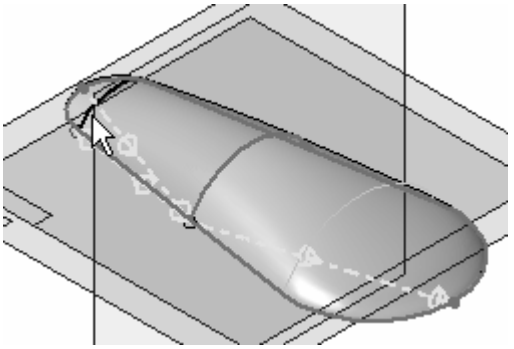

- Click *Edit* on the error dialog box. The cross section order is the cause for the error. This will be corrected later.

- Click the cross section shown and right-click.

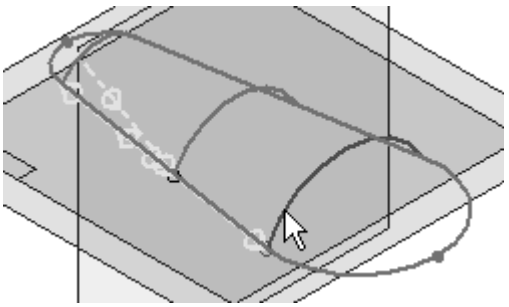

- Click *Edit* on the error dialog box. The cross section order is the cause for the error. This will be corrected later.

- Click the BlueSurf Options button.

- Click the *Advanced* tab on the BlueSurf Options dialog box.

Notice the order of the Sections in the dialog box. Pause the cursor over a section and it will highlight in the part window.

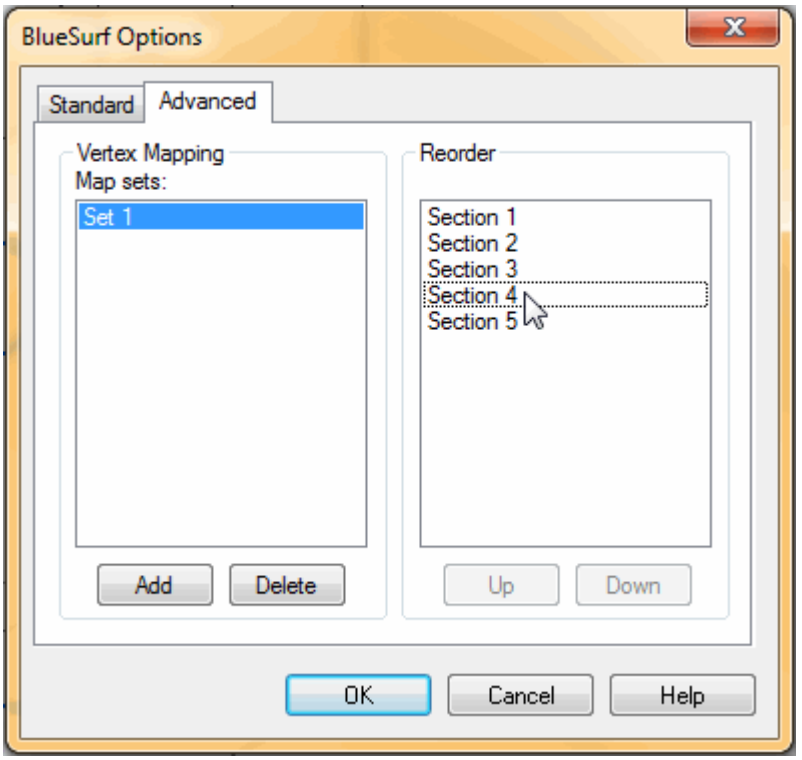

- Select Section 4 and then click the Up button to reorder the section between Sections 1 and 2.
- Select Section 5 and then click the Up button to reorder the section between Sections 2 and 3.
- Click OK.

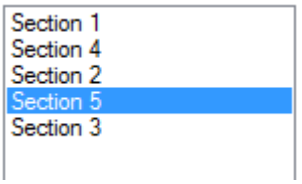

- Click Finish.

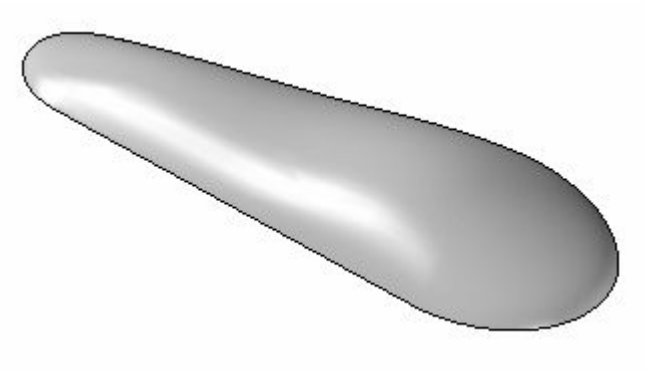

- The activity is complete.

Summary

In this activity you learned how to create and edit BlueSurf surfaces.

H Activity: Creating and editing a BlueSurf

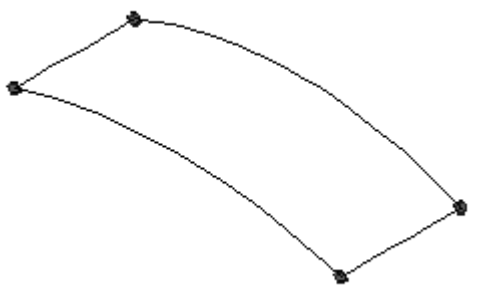

Note

The part file contains four curves that are BlueDot connected.

Open *surface lab 3-04.par*.

Create a BlueSurf with guides

- Select Surfacing tab® Surfaces group® BlueSurf .
- Click curve 1 as shown for the first cross section and then right-click. Click curve 2 as shown for the second cross section and then right-click.

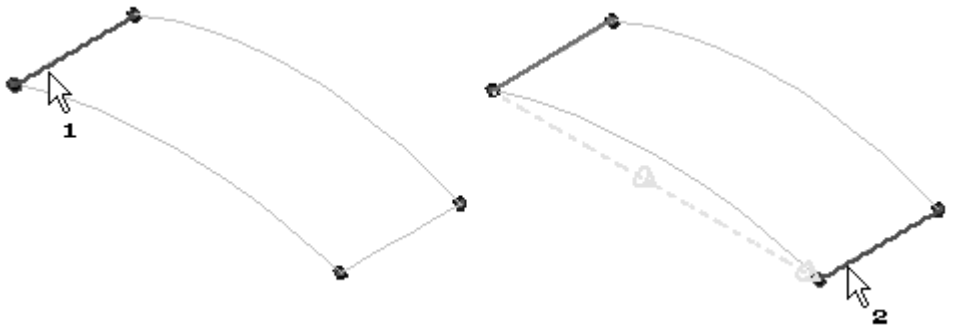

- Click the Guide Curve step.

- Click guide curve 3 as shown and then right-click. Click guide curve 4 as shown and then right-click.

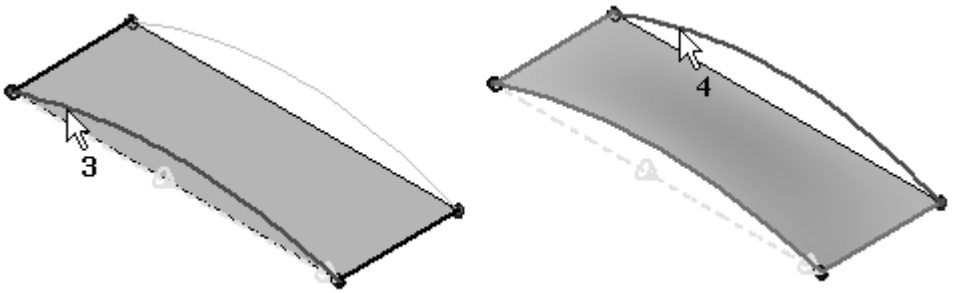

- Click Preview and then click Finish.

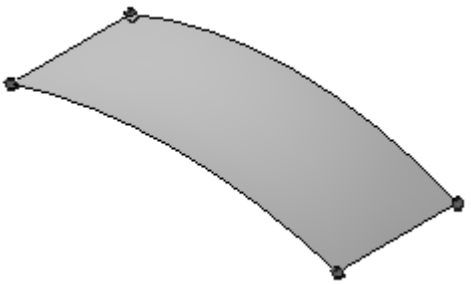

Insert sketches on the BlueSurf

This provides additional shape control.

- Click the Select tool and then select the BlueSurf feature.

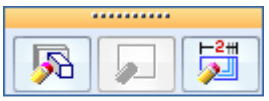

- Click *Edit Definition*.
- Click the Options button on the command bar.

- On the BlueSurf Options dialog box, under *Curve Connectivity* click *Use BlueDots*. Under *Inserted-Sketch*, type .01. Click OK.

  Note

  The tolerance controls the number of edit points used on inserted sketches.

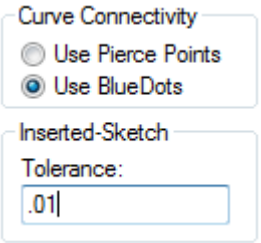

- Click the Insert Sketch step button.

- Click the *Plane Normal to Curve* option.
- Click the curve shown.

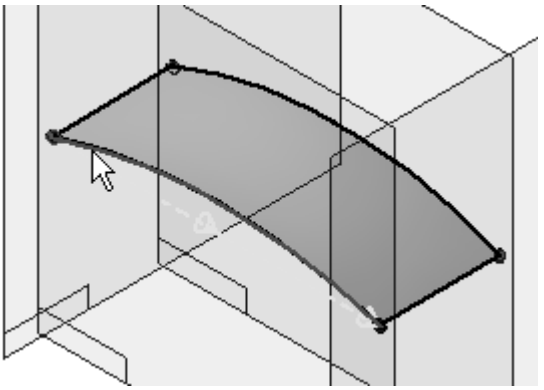

- Notice a normal plane is attached to the curve, which can be dynamically dragged along the curve. Drag the plane until the *Position* value is 0.25. You can also enter .25 on the command bar. Click to place the plane.

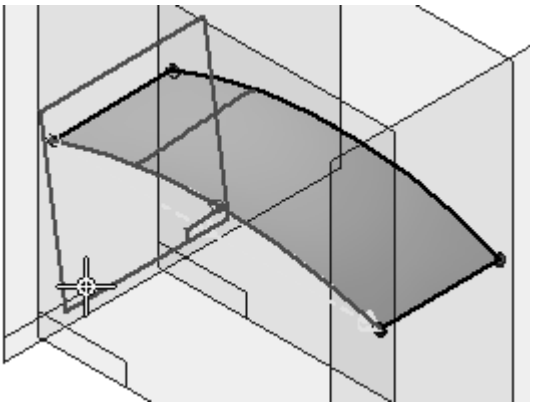

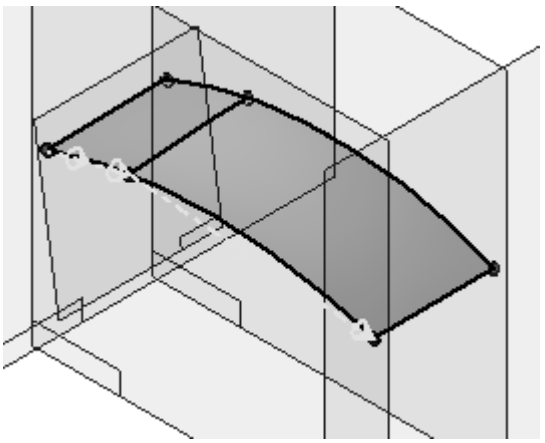

- Repeat the previous step to insert sketches at positions .50 and .25 (from the opposite end) as shown.

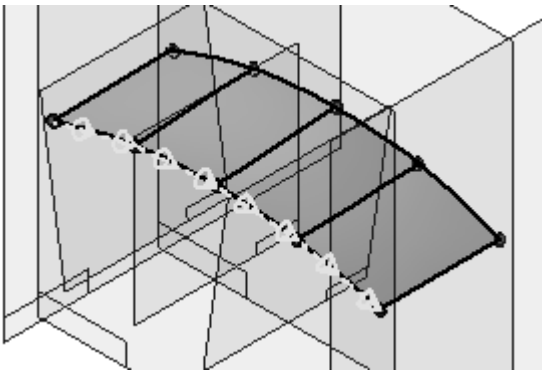

- Insert sketches normal to the cross section curve. Click the curve shown and insert sketches at positions .25, .50 and .25 (from the opposite end).

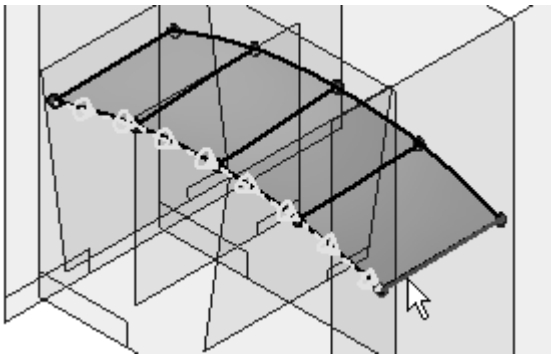

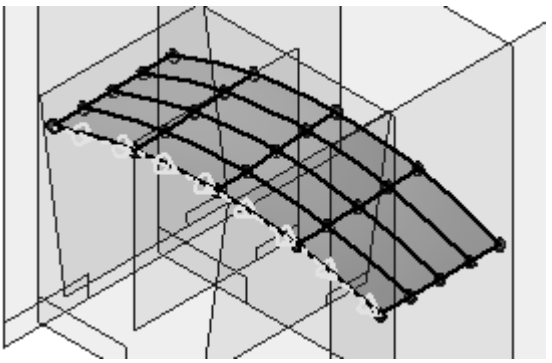

- Click *Finish* twice.

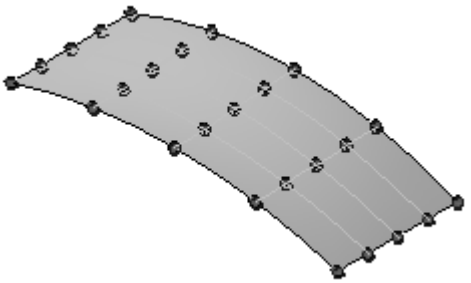

Perform BlueDot edits to change the shape of the surface

Edit the BlueDots along the center by changing their position in the Z-direction.

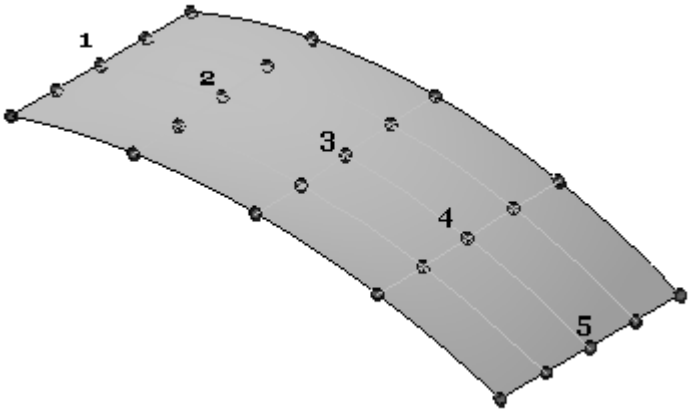

- Click the Select tool. Select the BlueDot shown and then click *Dynamic Edit*.

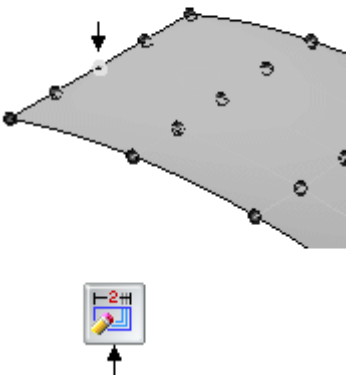

- Click the Z-axis on the 3-D triad.

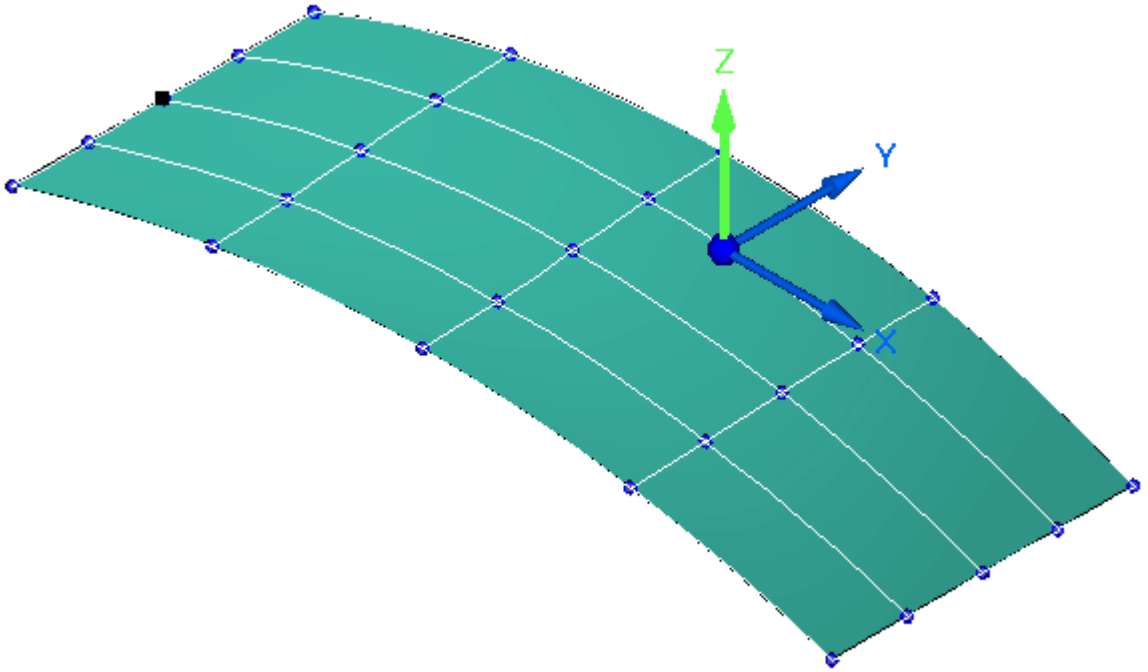

- Click the Relative/Absolute Position button .

- In the dZ: field, type 5. Make sure Curves 1 and 2 are set to Shape edit. Press the Enter key.

  Note

  If you press the Enter key again, the value will be applied again.

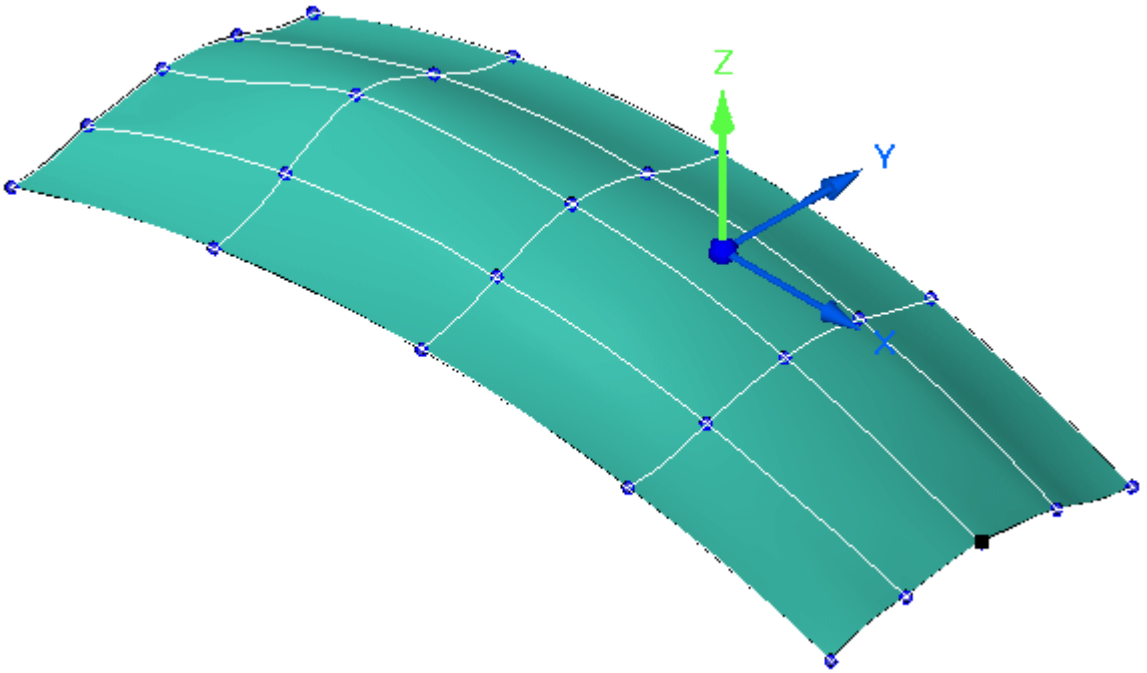

- Click in an open space in the part window to exit the BlueDot edit.
- Repeat the previous step to edit BlueDots 2-5. Edit BlueDot 5 with a delta distance of 5. Edit BlueDots 2-4 with a delta distance of 10.

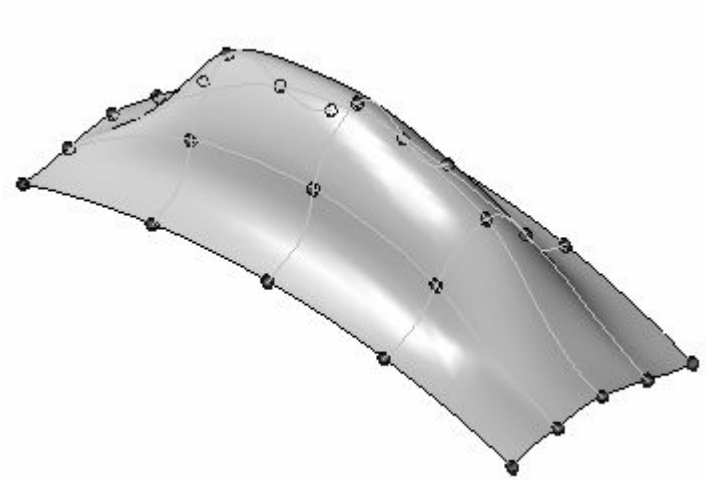

- Right-click in the part window. Turn off the display of sketches and BlueDots.

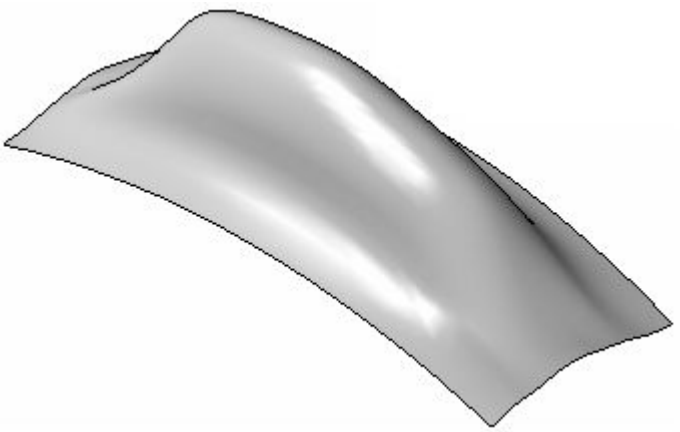

- The activity is complete. Save and Close this file.

Summary

In this activity you learned how to create and edit a BlueSurf.

I Activity: Surface manipulation

Open *surface lab 4-01.par*.

Extend a surface

- Select Surfacing tab® Surfaces group® Extend Surface .
- Select the edge shown and click the Accept button on the command bar.

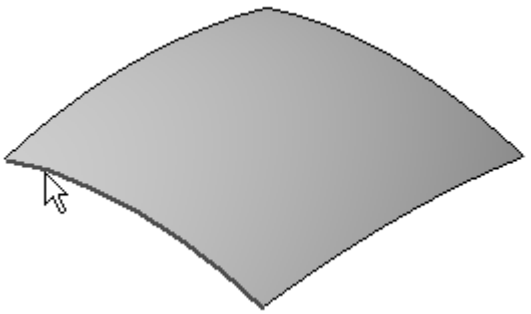

Note

Notice on the Extend Surface command bar the options for *Natural*, *Linear* and *Reflective Extent*. The natural option extends the surface to follow the curvature of the surface. The linear option extends the surface in a linear direction. The reflective option specifies that the extended portion of the surface will be a reflection of the input surface. This option is not available for analytic surfaces.

- Drag the distance vector approximately as shown, and click.

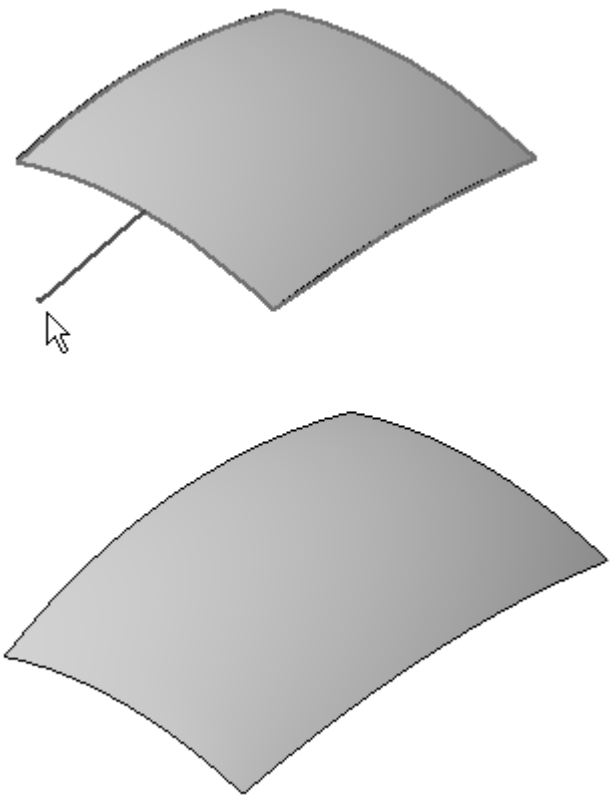

- Click Finish.
- Click the Select tool.
- In PathFinder, select the new Extend feature and hit the Delete key.
- Multiple edges can be extended. Repeat the previous step. Select all four edges and then click the Accept button.

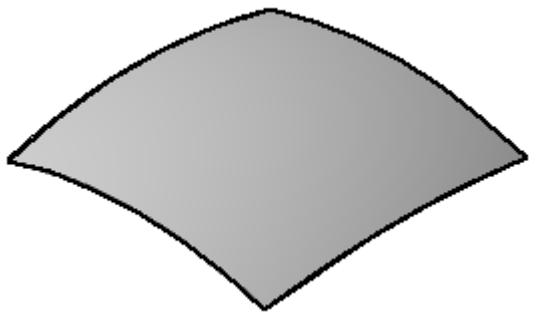

- Drag the distance vector approximately as shown and click.

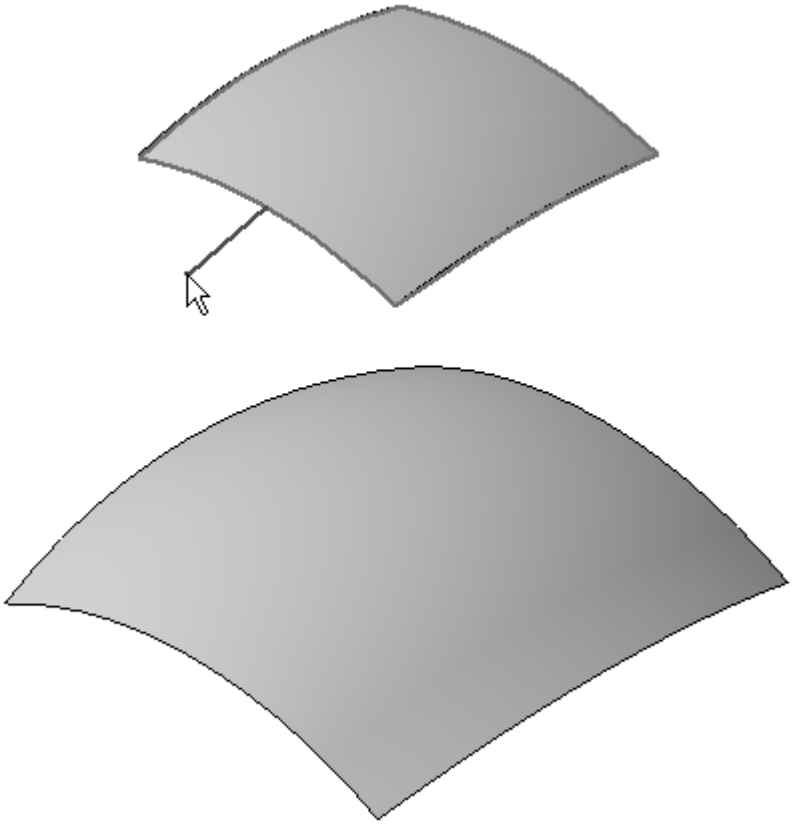

- Click Finish.
- Click the Select tool.
- In PathFinder, delete the Extend feature.

Offset a surface

- Select Surfacing tab® Surfaces group® Offset Surface .
- Click the surface, and then click Accept.

- Type 50 for the *Distance* and press the Enter key.

- Position the direction arrow as shown, and click.

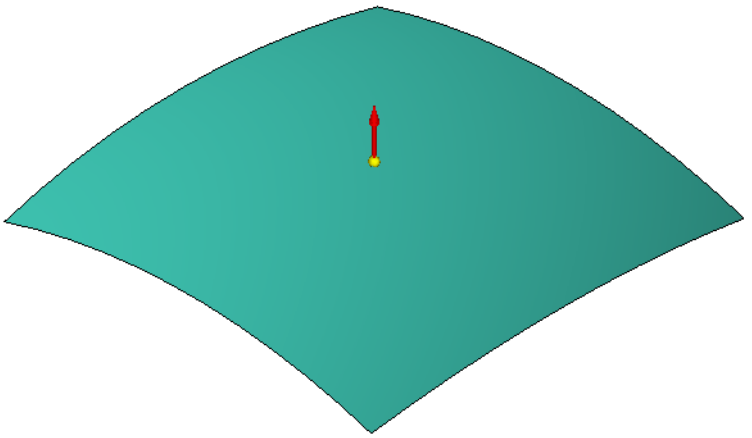

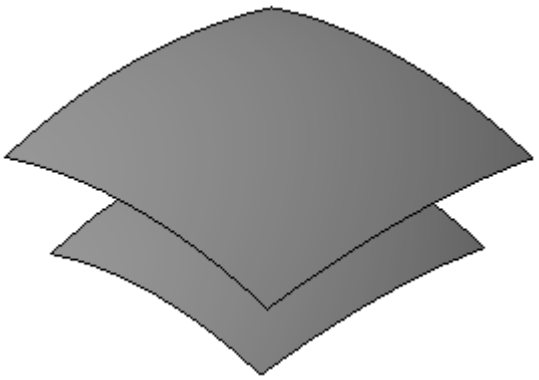

Note

The offset surface is offset along normal vectors from the input surface a distance of 50 mm.

- Click Finish.

- Repeat the previous step for the original (bottom) surface. Use 50 for the offset distance and position the direction arrow downward as shown.

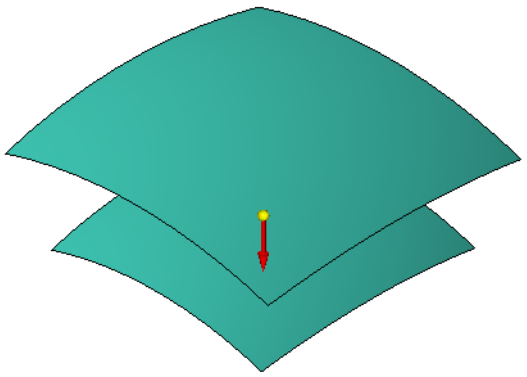

- Click Finish.

- Click the Select tool.
- In PathFinder, delete the two offset surfaces.

Project a curve onto a surface

- In PathFinder, show *Sketch B*.
- Select Surfacing tab® Curves group® Project Curve command .
- Select the circle shown below and then click the Accept button.

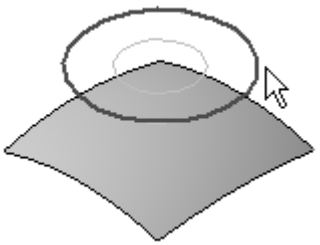

- Select the surface and click Accept. Position the direction arrow as shown and click.

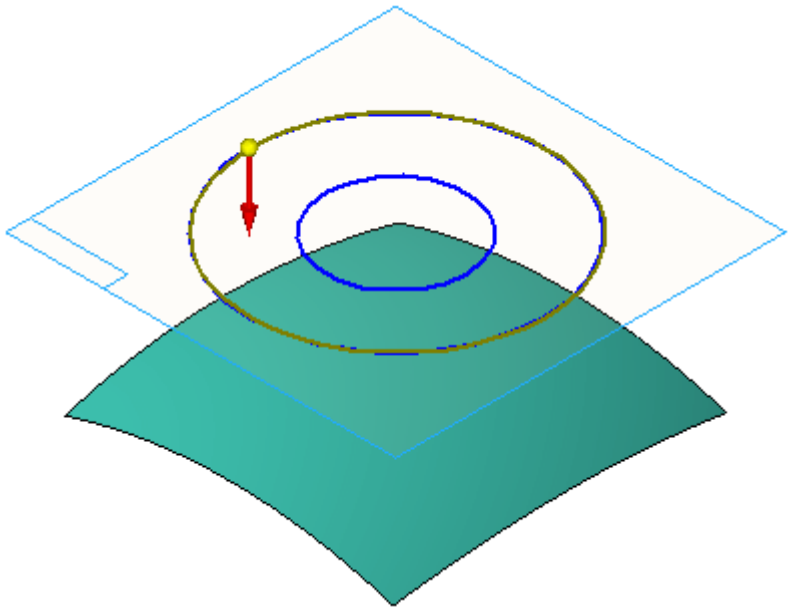

- Click Finish.

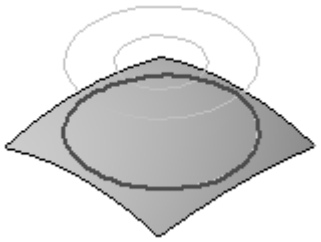

- **Project Curve** is still active. Select the circle shown below and then click the Accept button.

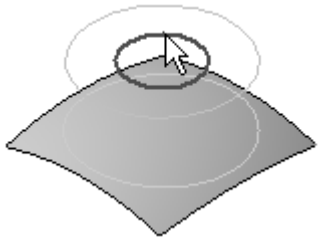

- Select the surface and click Accept. Position the direction arrow as shown and click.

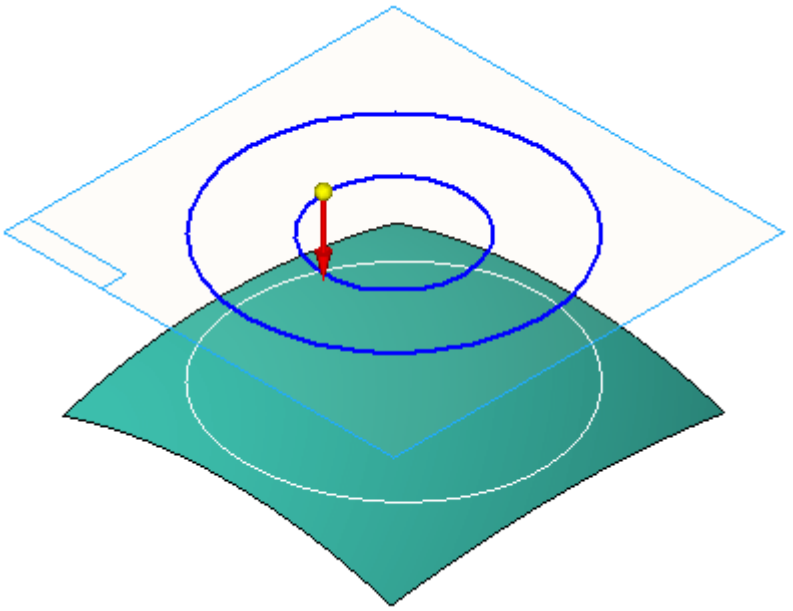

- Click Finish.

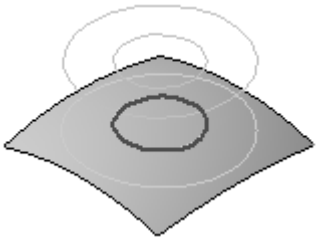

- In PathFinder, hide Sketch B.

Trim a surface

Trim surface is used extensively in surface modeling.

- Select Surfacing tab® Surfaces group® Trim Surface .
- Select the surface and click Accept.

- Select the projection curve as shown and click the Accept button.

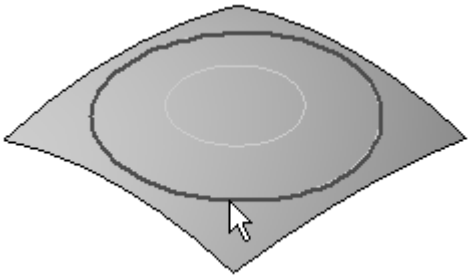

- Position the direction arrow as shown to trim the surface outside the projection curve.

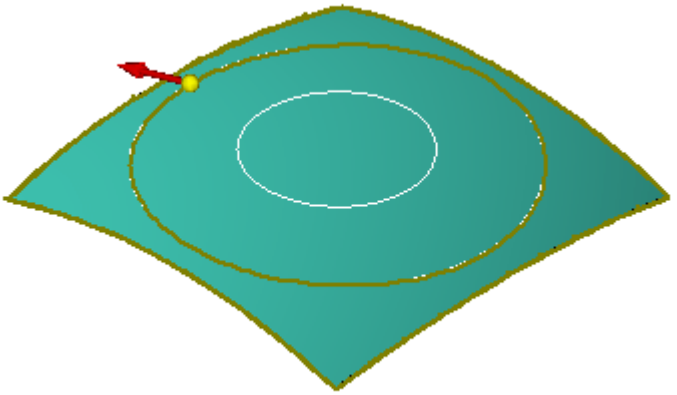

- Click Finish.
- Select the surface and click Accept.
- Select the projection curve as shown and click the Accept button.

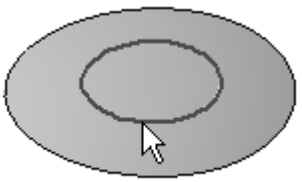

- Position the direction arrow as shown to trim the surface inside the projection curve.

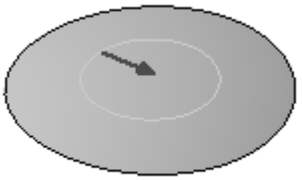

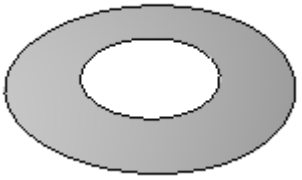

- Click Finish.

  Notice the two Trim features in PathFinder.

- Right-click and Hide All® Curves.

Copy a surface

- Select Surfacing tab® Surfaces group® Copy .

  Notice on the Copy Surface command bar the two options for removing boundaries. To remove internal boundaries on the copied surface , select the left button. To remove external boundaries on the copied surface click the right button. If neither option is selected, the copied surface will maintain all boundaries.

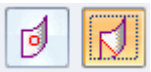

- Click the *Remove External Boundaries* button.

- Select the surface and then click the Accept button.

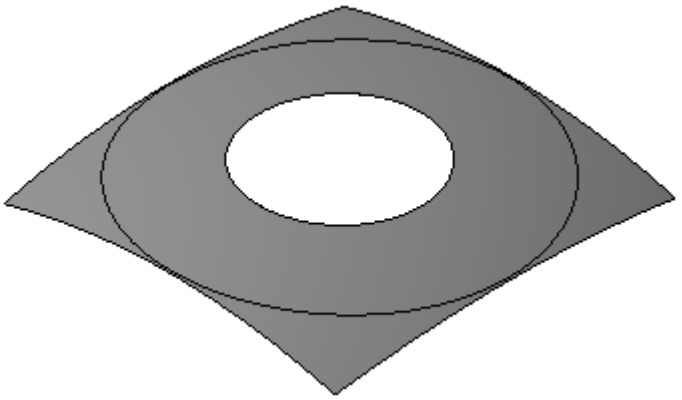

- Click Finish.

  Notice the Copy feature in PathFinder.

- Click the Select tool.

- In PathFinder, delete the following features: *Projection 11* , *Projection 12* , *Trim 11* ,*Trim 12* and *Copy 7*

- Hide feature *Sweep A*.

Delete faces

. Faces on a construction body can be deleted and replaced with a new surface.

- In PathFinder, show feature *Extrude 2*. Click the **Fit** command.

- Select Home tab® Modify group® Delete Faces .

- Select the three faces shown and click the Accept button.

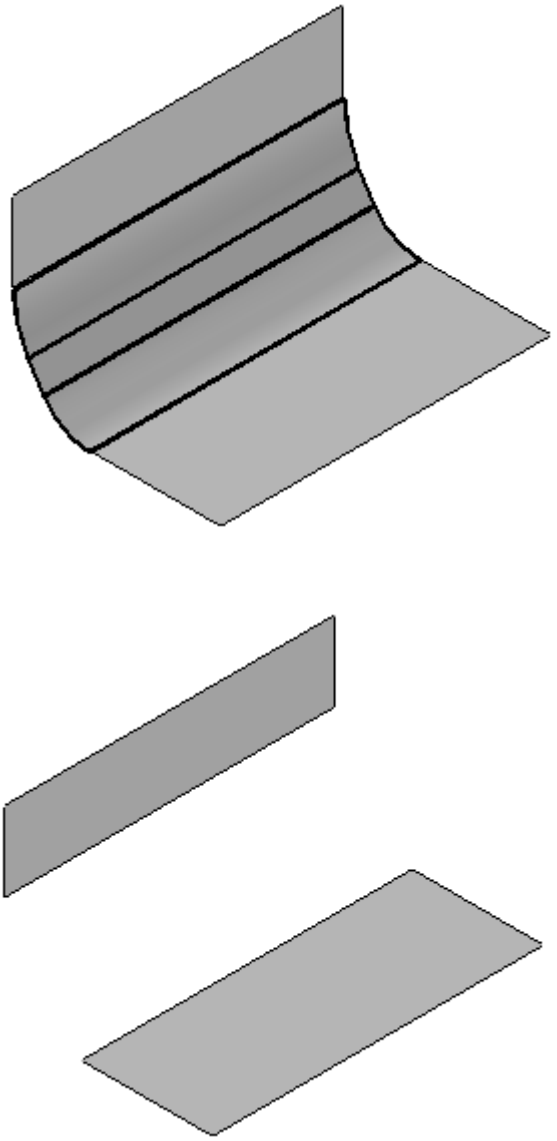

- Click Finish.

  Notice the Delete Face feature in PathFinder.

- Hide feature *Extrude 2*. Show feature *Extrude 3*. The Extrude 3 feature was constructed with a closed profile and the ends were capped.

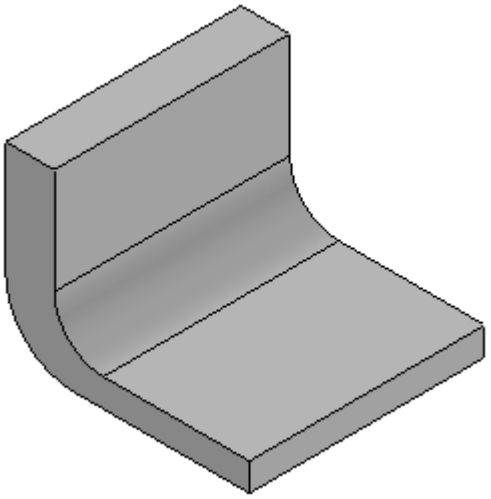

- Click the Delete Faces command.
- Click the Heal Option button.

Note

In order for the heal option to work, the construction body must be closed.

- Select the surface shown and then click Accept.

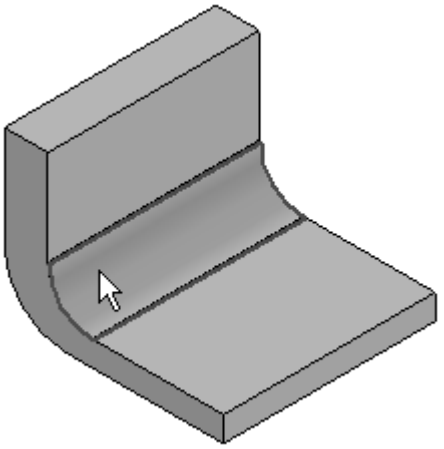

- Click Finish.

  Notice the result. The face was deleted and the two adjoining faces adjust to fill the gap. The two end caps were also modified.

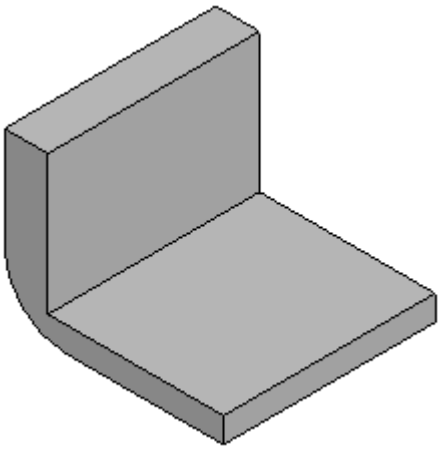

- Repeating the previous step, delete the face shown.

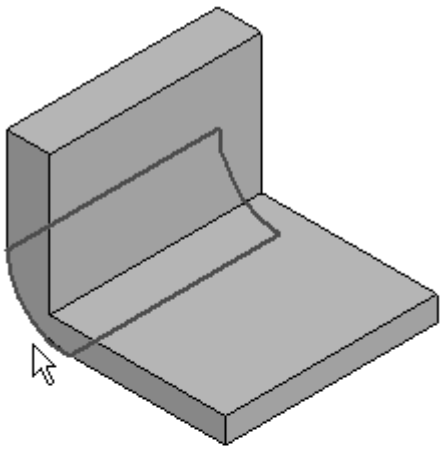

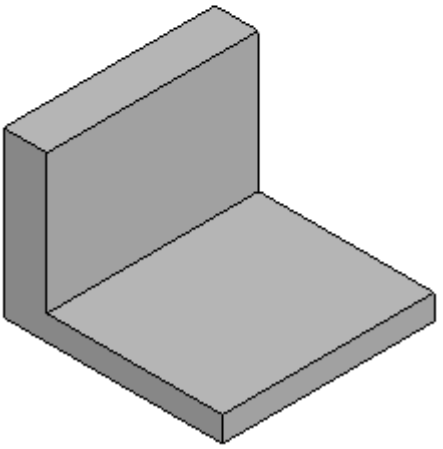

- Click Finish.
- Click the Select tool.
- Hide *Extrude 3*.

Stitch surfaces

- In PathFinder, show features *BlueSurf 1, BlueSurf 2, BlueSurf 3*, and *BlueSurf 4*.
- Select Surfacing tab® Surfaces group® Stitched Surface.
- Type .01 in the *Stitch tolerance* field and then click OK.

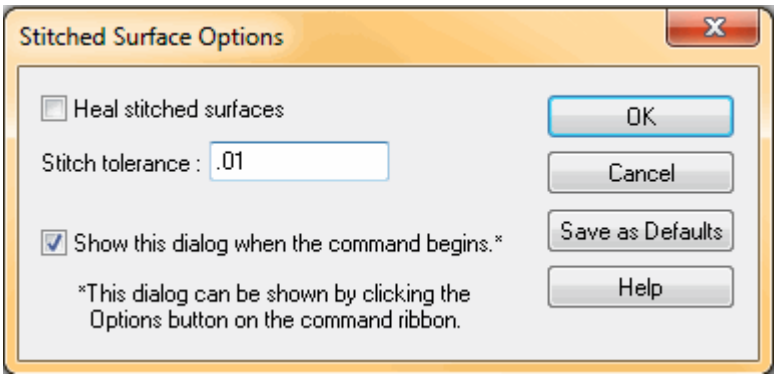

- Select all four surfaces and then click the Accept button.

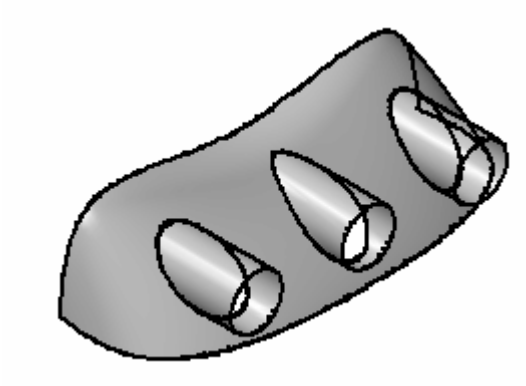

- Click Finish.

  Note in PathFinder the Stitch feature.

- Select Surfacing tab® Surfaces group® Show Non-Stitched Edges.

  Note

  The command is located underneath the list headed by Stitched Surface.

- Click the stitched surface. Notice the highlighted edges. These are the un-stitched edges.

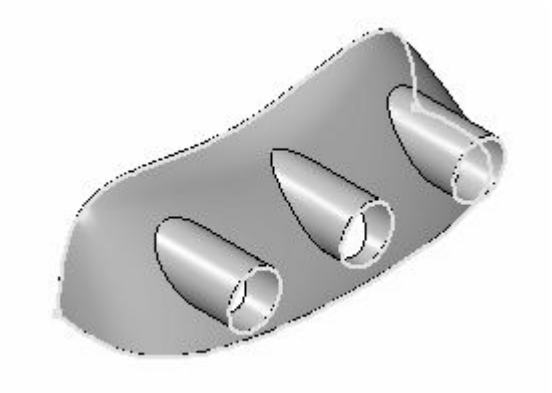

- Click *Close* on the command bar.

- In order to make a solid feature there must be surfaces stitched to all of the non-stitched edges. Create surfaces needed to make a solid feature. Select Surfacing tab® Curves group® Keypoint Curve .

- Draw a keypoint curve as shown. The curve has two points.

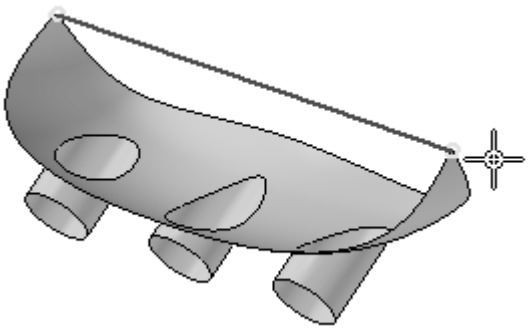

- Create five bounded surfaces. Select Surfacing tab® Surfaces group® Bounded Surface .

- Select the edges shown and click the Accept.

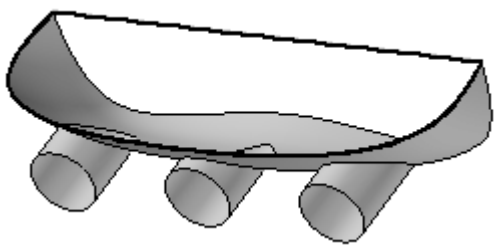

- Turn off the *Face Tangency* option.

- Click *Preview* and then click *Finish*.

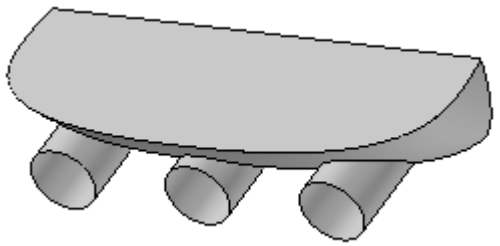

- Repeat the same steps to create the bounded surface shown.

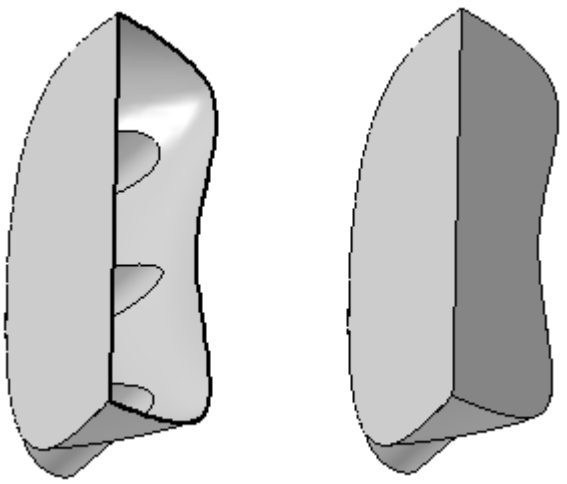

- Repeat the steps for the three circular edges.

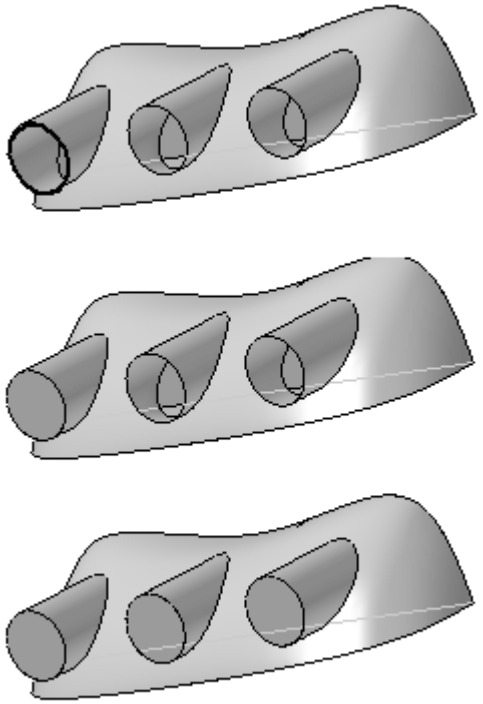

- Select **Stitched Surface**. Type .01 in the *Stitch tolerance* field and click OK.
- Select the stitched surface and then select the five bounded surfaces.
- Click the Accept button. Since there are no non-stitched edges remaining, the stitched surfaces result in a solid body. Click OK on the message dialog.
- Click *Finish*.

  Note

  If there is no base feature (solid) in the file, you can right-click on the stitched surface and click Make Base Feature to create a solid of the stitched surface.

- Click the Select tool.
- Hide features BlueSurf 1-4 and the keypoint curve.

Replace a face

- Select View tab® Show group® Construction Display. On the dialog, choose Show All® Design body. *Protrusion A* is displayed. Replace faces A and B on Protrusion A with a construction surface.

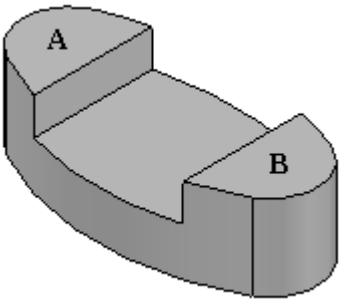

- Show feature *BlueSurf 7*.

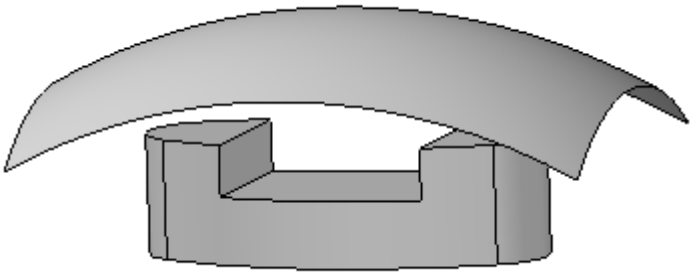

- Select Surfacing tab® Surfaces group® Replace Face .
- Select the faces shown and click the Accept button.

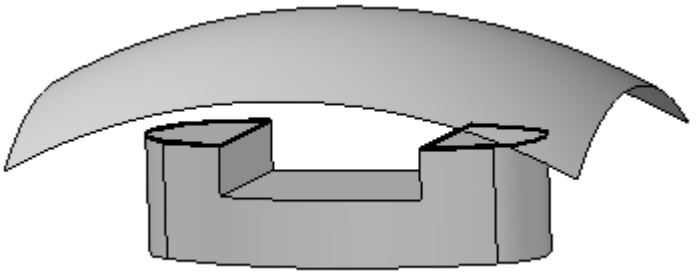

- Select the surface shown for the replacement surface.

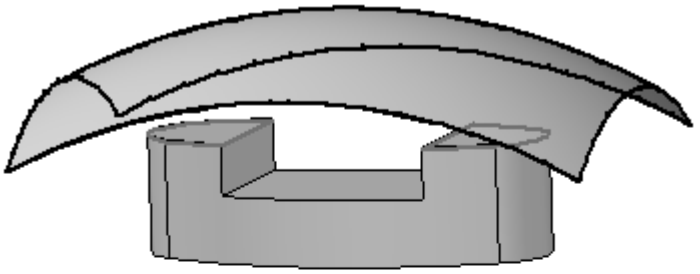

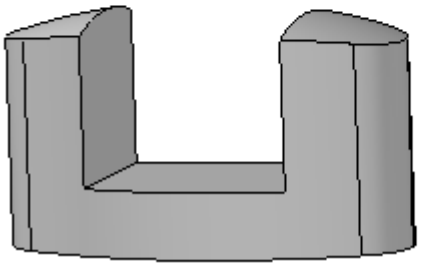

- Click *Finish*.
- Click the Select tool.
- Replace the bottom face on the protrusion. Show *BlueSurf 8*.

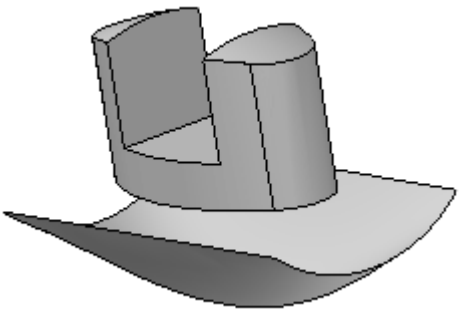

- Click the Replace Face command.

- Select the face as shown and click the Accept button.

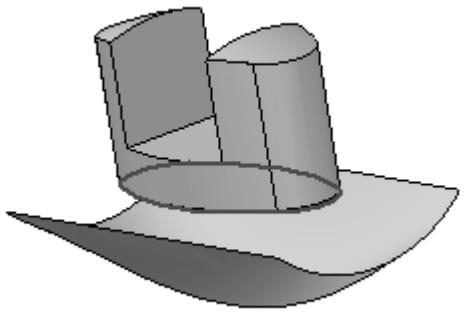

- Select the surface shown for the replacement surface.

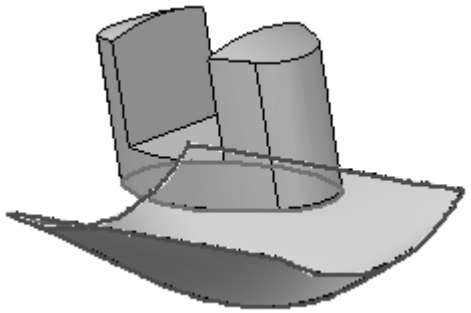

- Click *Finish*.

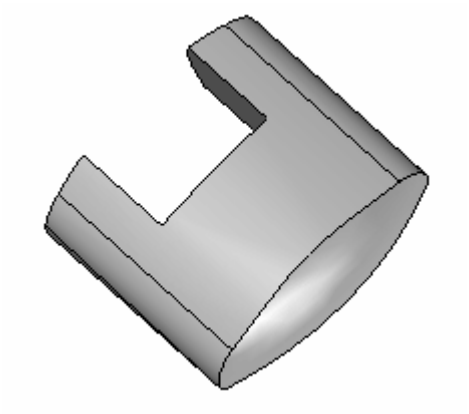

- This completes the activity. Exit and save the file.

Summary

In this activity you learned how to use several surface manipulation commands.

J Activity: Parting split and parting surface

Create a new metric part file using the ISO Part template. In that file's PathFinder, right-click on the Synchronous header and select **Transition to Ordered** from the list.

Note

You will begin by constructing a core for the mold. The core needs to be sized to accommodate the file *pad.par* that will be the cavity.

Create a sketch

- Select the display box next to *Base Reference Planes* to show them.
- Select Home tab® Planes group® Parallel. 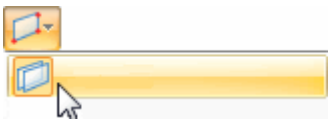
- Select the *Top (xy)* base reference plane- indicated by the arrow. Create a parallel plane 35 mm above it as shown.

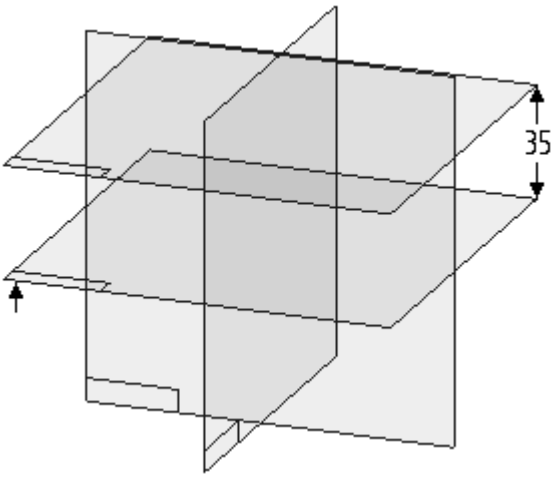

- Sketch the following profile on the parallel plane you just created. Make sure the midpoints of the line elements are horizontal/vertical aligned to the center of the reference planes.

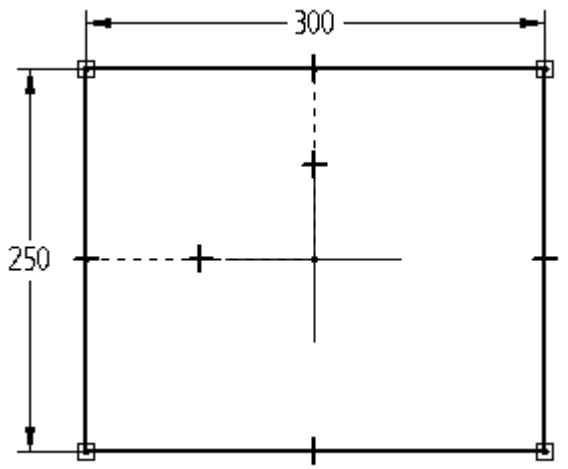

- Click **Close Sketch** and then click *Finish*.

Create the core part

- Select Home tab® Solids group® Extrude.
- Click the *Select from Sketch* option.
- Select the sketch shown and click the Accept button.

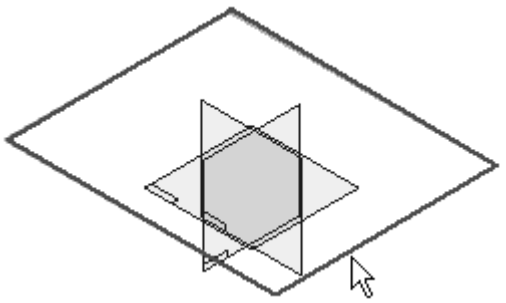

- Click the *Symmetric Extent* button and type 200 for *Distance*. Click *Finish*.

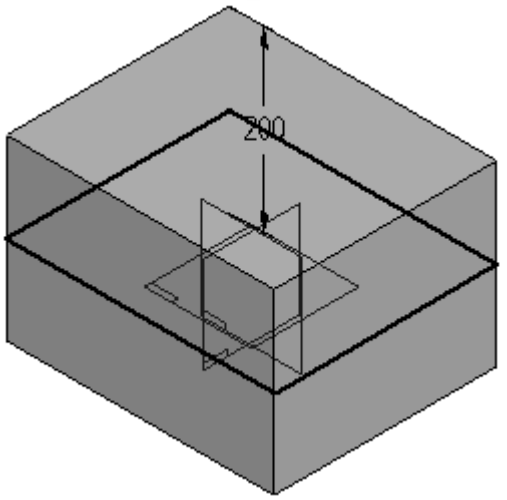

Create the cavity

To create the cavity, perform a Boolean difference to remove pad.par from the core.

- Select Home tab® Clipboard group® Part Copy .
- In the Select Part Copy dialog box, set *Look in*to the folder in which you installed the training parts for this course. Select *pad.par* and click *Open*.
- On the Part Copy Parameters dialog box, make sure *Design Body* is checked and then click OK.

- Click *Finish*. Notice the feature *Part Copy 1* is now listed in PathFinder. Hover you cursor over this entry and you can see the pad highlight in the view.

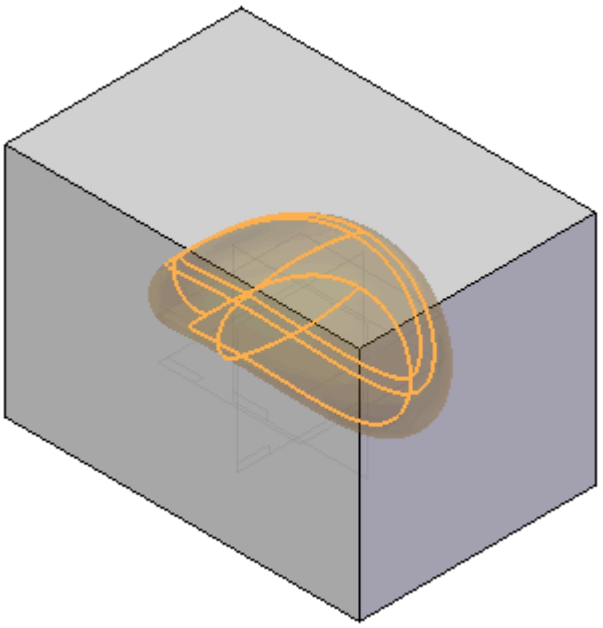

- Select Surfacing tab® Surfaces group® Boolean .

  Note

  Boolean is located in the list headed by **Replace Face**.

- Click the *Subtract* button .
- Select the Part Copy and then click the Accept button.

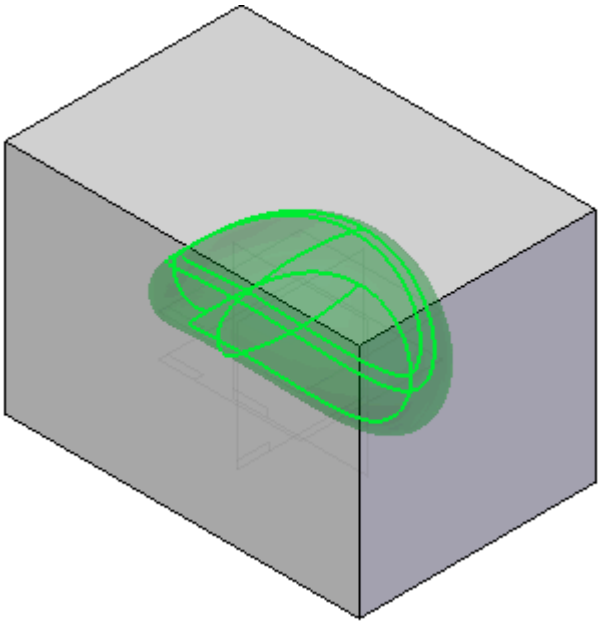

- Click *Finish*. Notice the *Boolean 1* feature listed in PathFinder.

The core now has a cavity of pad.par.

Create a parting split curve on the cavity

Note

A parting split curve is derived from silhouette edges as viewed normal to a selected plane. The parting split curve is used to define where a part needs to split to allow for removal from a mold.

- Select Surfacing tab® Surfaces group® Parting Split .

  Note

  Parting Split is located in the list headed by **Split**.

- Select the plane shown- it is the *Top (xy)* base reference plane.

  Note

  You may wish to change to a Wireframe view style for better visibility.

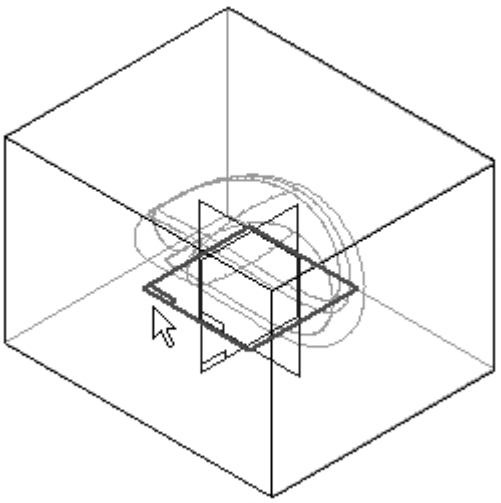

- On the Parting Split command bar, set the Select filter to *Body*.

- Select the body as shown.

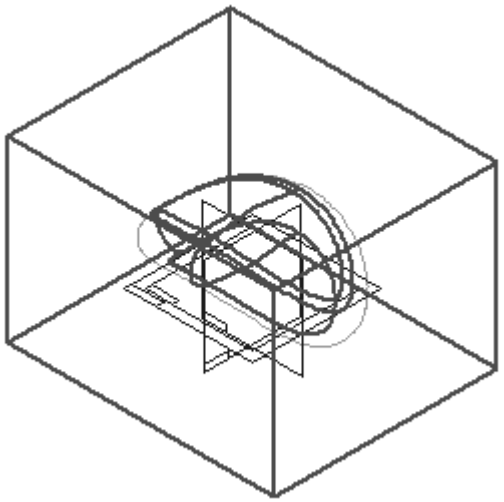

- Click the *Accept* button and then click *Finish*.
- Hover your cursor over *Parting Split 1* in PathFinder and notice the parting split is highlighted in the view.

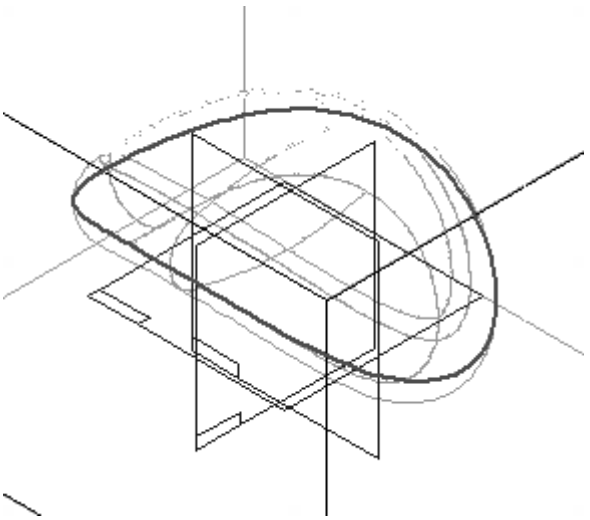

Create a parting surface

This surface will be used to split the core in a later step.

- Select Surfacing tab® Surfaces group® Parting Surface .

Note

Parting Surface is located in the list headed by **Split**.

- Select the plane shown- again it is the *Top (xy)* base reference plane.

  Note

  The parting surface will use this plane as reference for all normal vectors in creating the surface.

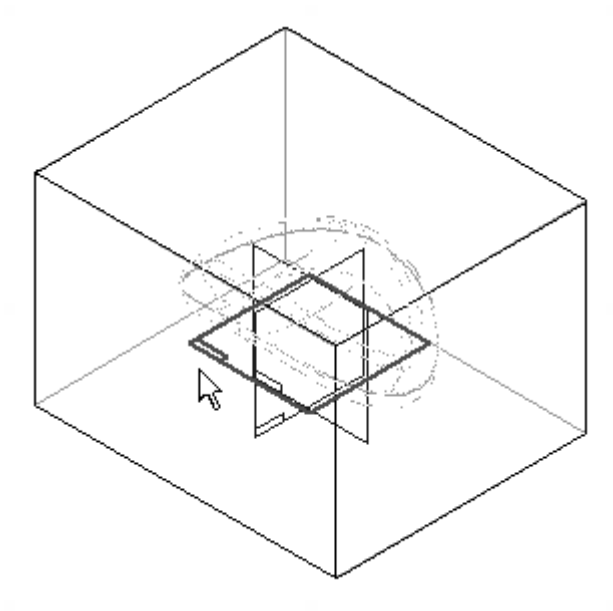

- Select the parting split curve as shown and click the *Accept* button.

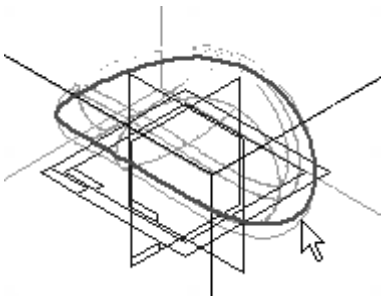

- Type 150 in the *Distance* field and press the <Enter> key.

- Position the arrow to point outward as shown and click. Click *Finish*.

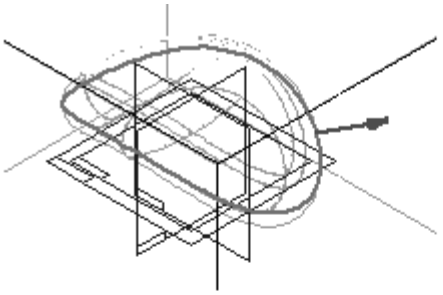

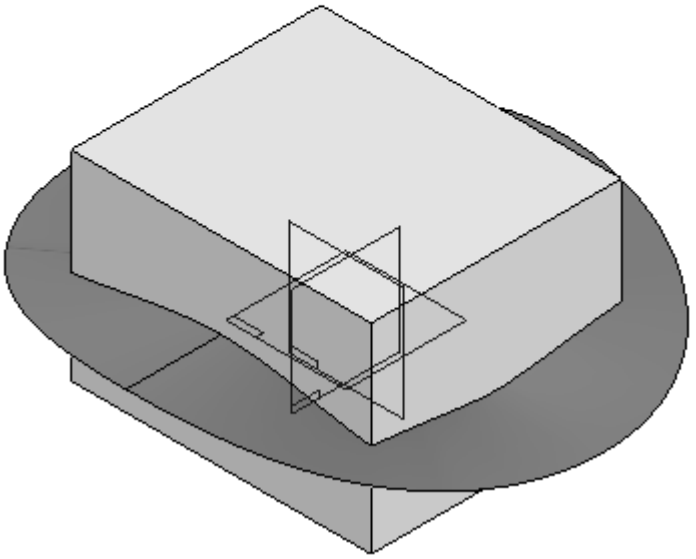

- Save the file as *pad core.par* in the course training folder.

Divide the part

Split the core along the parting surface to create two mold halves.

- Select Surfacing tab® Surfaces group® Divide Part command .

Note

Divide Part is located in the list headed by **Replace Face**.

- Select the parting surface shown as the surface to be used to divide the core.

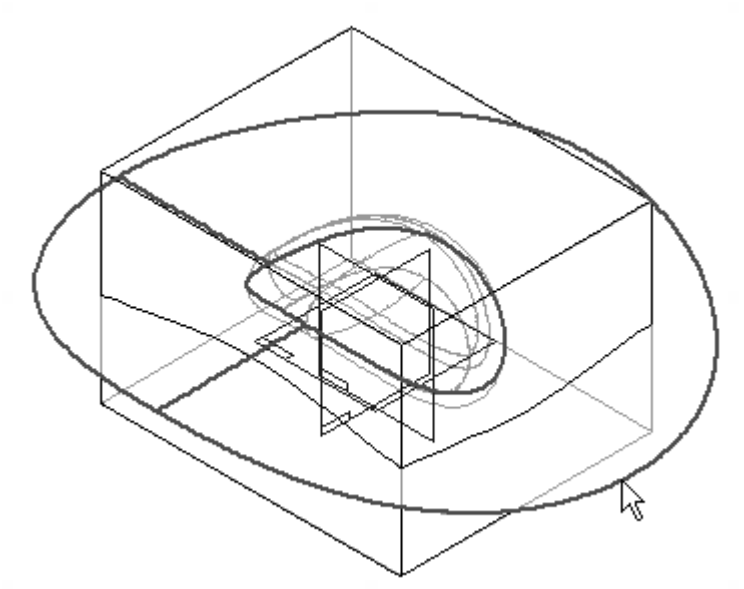

- Position the direction arrow as shown as the side to be divided into a new file.

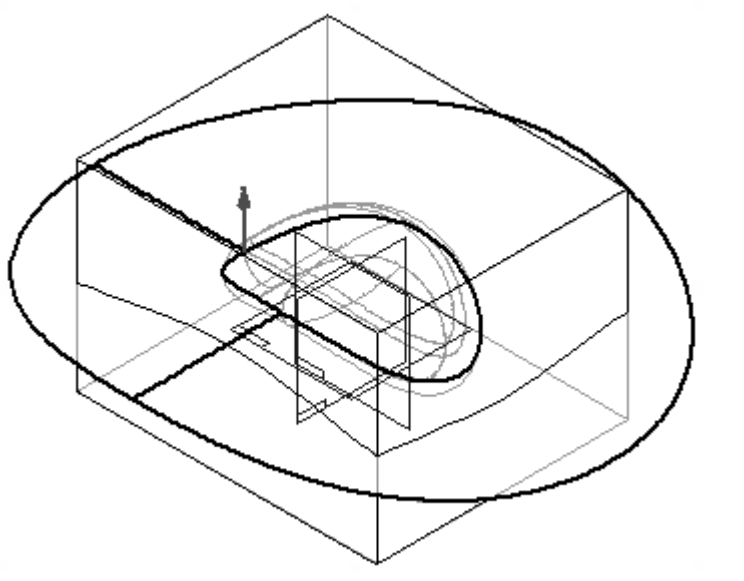

- Click *Finish*.

- On the Divide Part dialog box, notice the two new divided parts.

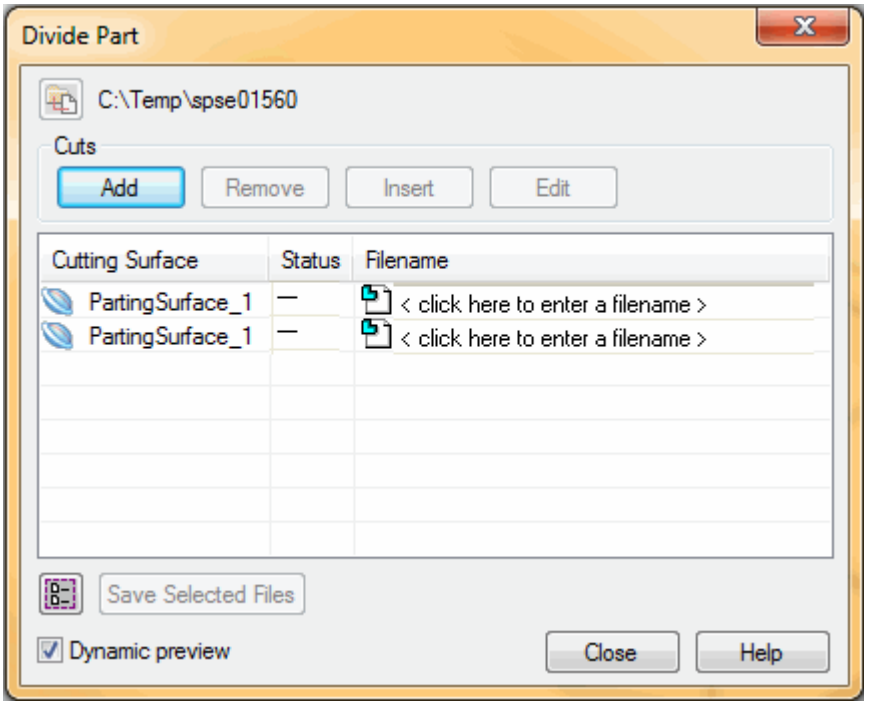

- Name the parts. Click on the first < *click here to enter a filename* > and type *top*. Click on the second and type *bottom*. Do not click Close.

- Click the *Select All* button.

- Click the *Save Selected Files* button.

- The two new files are created and notice that they are linked to the parting surface. Click *Close*.

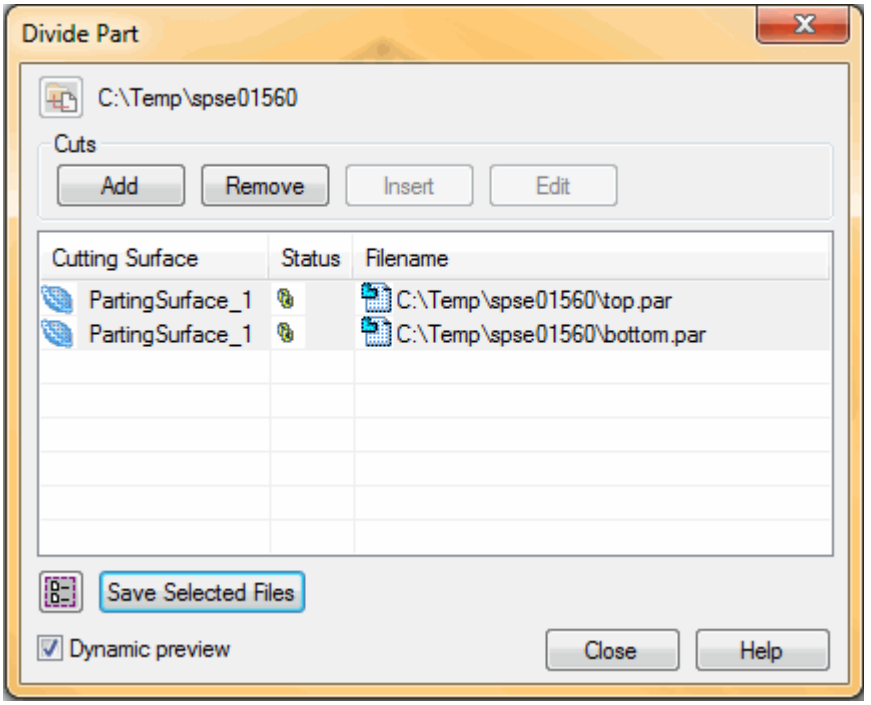

Open each of the two mold halves

- Close *pad core.par*.

- Open *top.par* in the course training folder.

Note

The base coordinate system and reference planes are hidden in the following images.

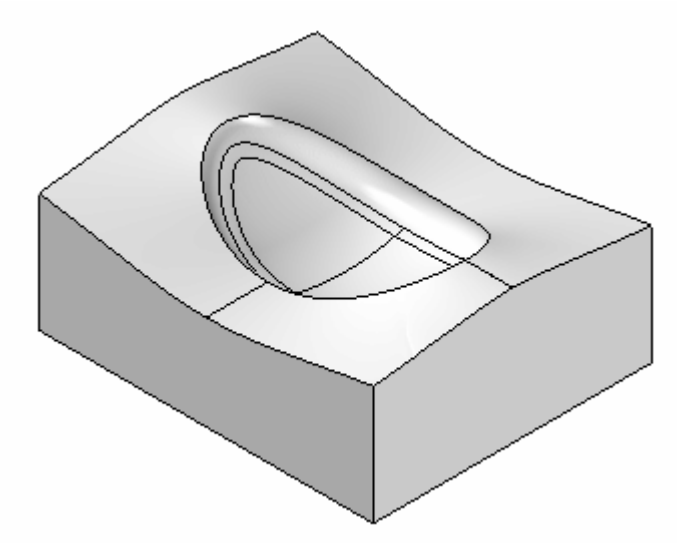

Note

In this image, the part was flipped 180° to show the cavity.

- Close *top.par* and open *bottom.par*.

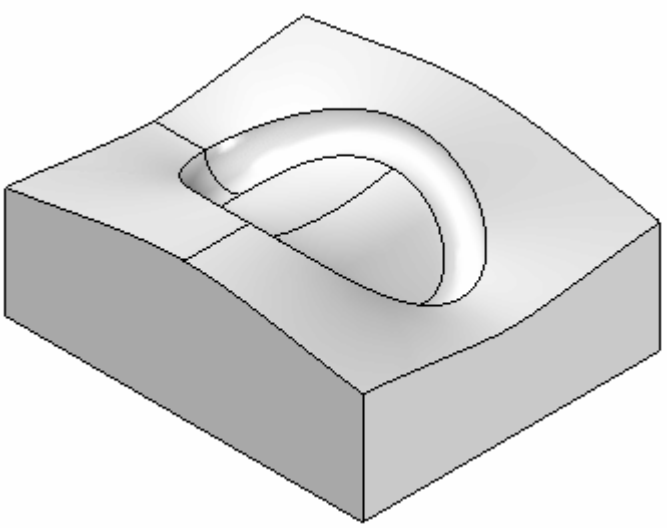

- The activity is complete. Close all files.

Summary

In this activity you learned how to construct two halves of a mold from a single core part.

K Activity: Creating a rotary razor body

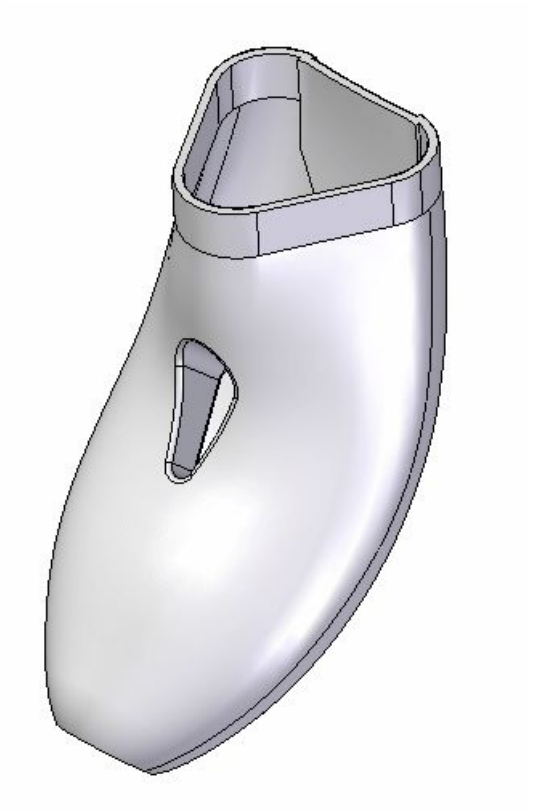

Create a new metric part file using the*ISO Part* template. In that file's PathFinder, right-click on the Synchronous header and select **Transition to Ordered** from the list.

Create an extruded surface

Sketch the profile

- Ensure that the Base Reference Planes are displayed.
- Sketch the following profile on the *Top (xy)* reference plane.

Note

Ensure you place the horizontal relationship between the midpoint of the top line and the origin. Also, place a point (Home tab® Draw group® Point) at the intersection of the reference planes.

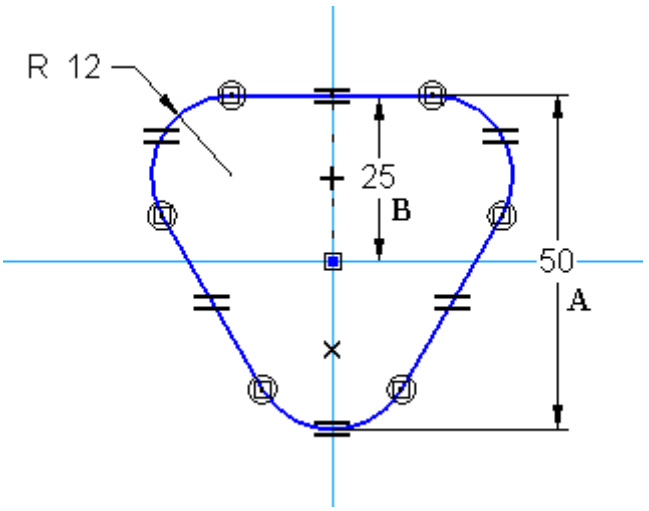

- Select Tools tab® Variables group® Variables. Set a variable to define the dimension “A” as twice the value of “B”.
- Close the sketch and*Finish*.

- Select Surfacing tab® Surfaces group® Extruded .
- Extrude the sketch 12 mm below the plane. Keep the ends open.

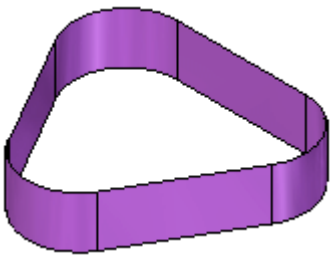

Create a curve

This will serve as the “spine” of the razor.

- Sketch on the *Right (yz)* reference plane an arc and line using the dimensions shown in the following image.

  Place a 3–Point Arc, selecting the point placed in the first sketch as the start location and making the top end tangent to the Front reference plane.

  Note

  You may wish to rotate the view slightly to facilitate seeing the point and Front plane.

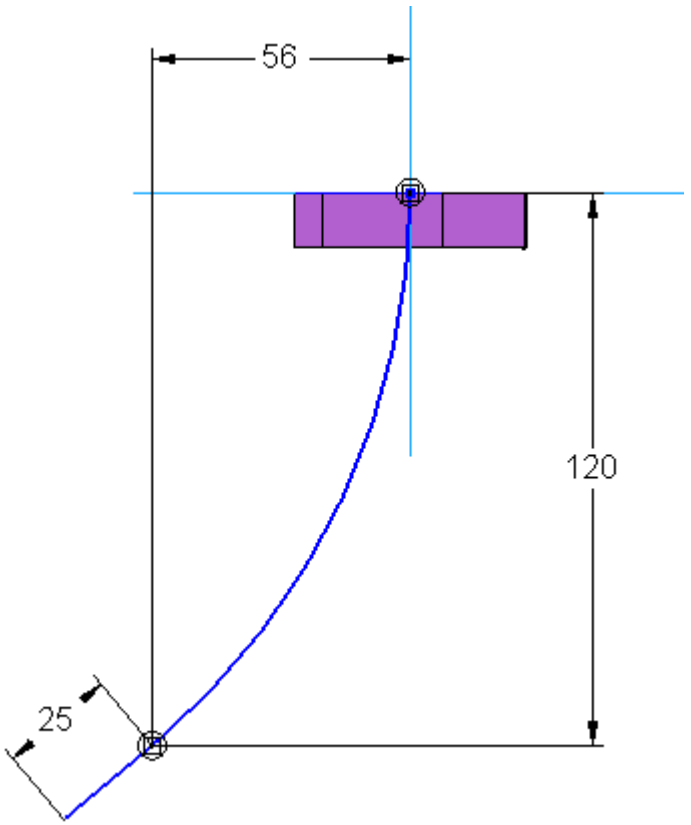

- Close the sketch, then click *Finish* on the command bar.

Sketch a cross-section

- Create a sketch on a plane normal to a curve. Place the plane at the bottom end of the arc.

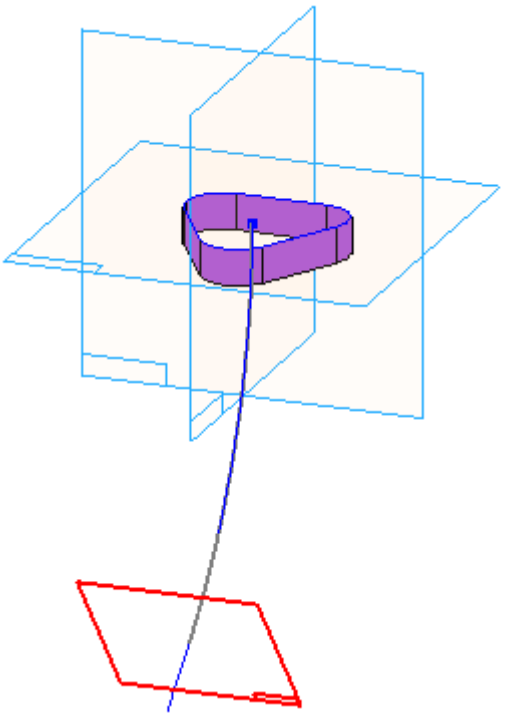

- Using the pierce point of the arc through the plane, create an ellipse. Assign a major radius of 18 mm and a minor radius of 15 mm to the ellipse.

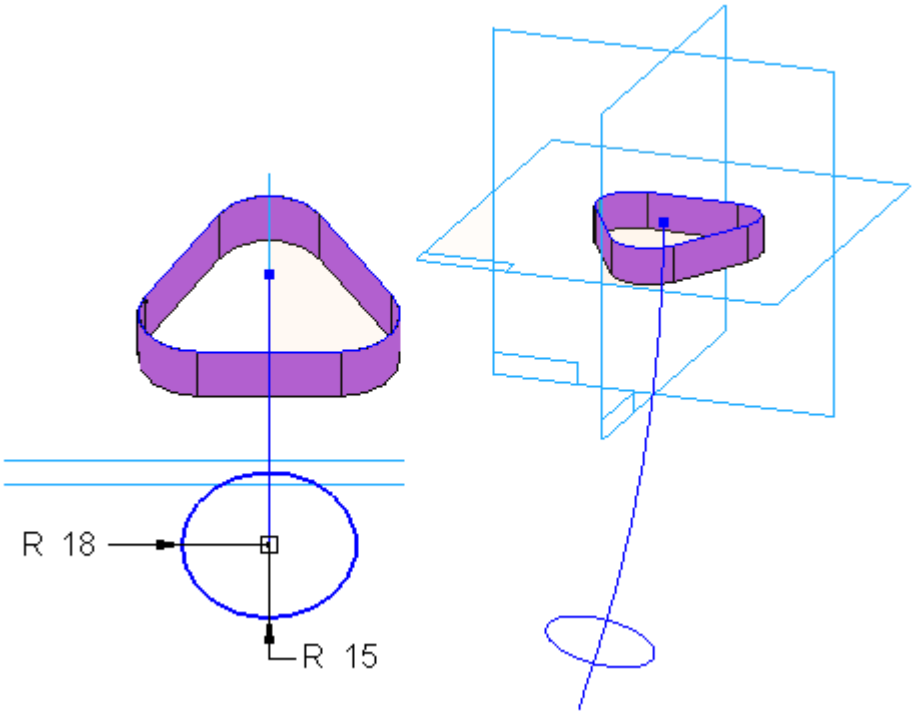

- Close the sketch, then click *Finish* on the command bar.

Create additional curves

These will represent the backbone or “spine” of the razor body.

- Sketch on the Right reference plane and create a **curve** beginning from the bottom of the extruded surface (1). Use 3–4 points to define this curve, using the pierce point at the top of the ellipse for the curve’s final point (2). Ensure that a

vertical align relationship (3) is defined between the top end of this curve and the existing surface (1). Don't be overly concerned about exact shape.

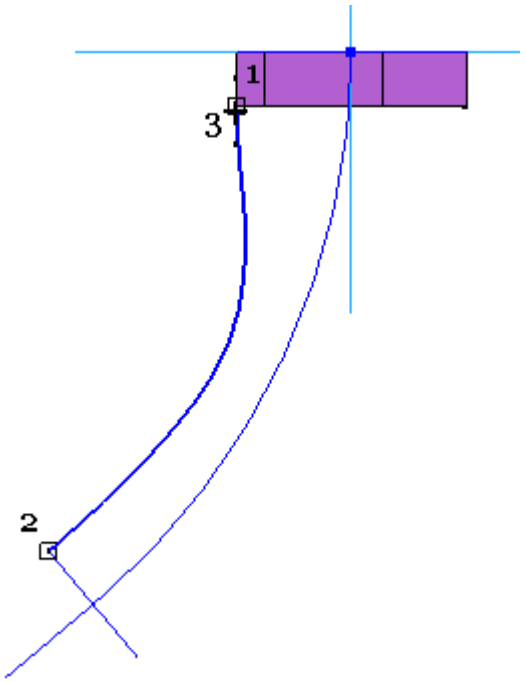

To place the horizontal/vertical relationship at the start of the curve, select the control vertex (A) and then select the extruded surface edge (B).

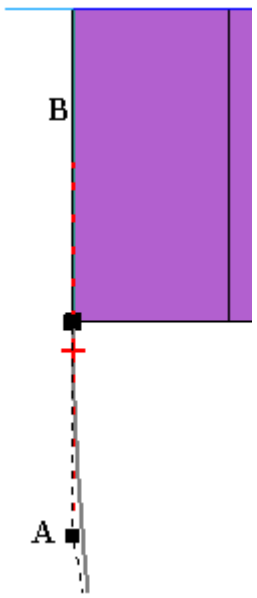

- Place an arc by 3 points starting with the midpoint of line (A). Use the pierce point at the end of the curve (B) for the second point of the arc. For the third point, move the cursor between the first two points until you get the tangent symbol (C) and then click. Also apply an end connect relationship between the two curves.

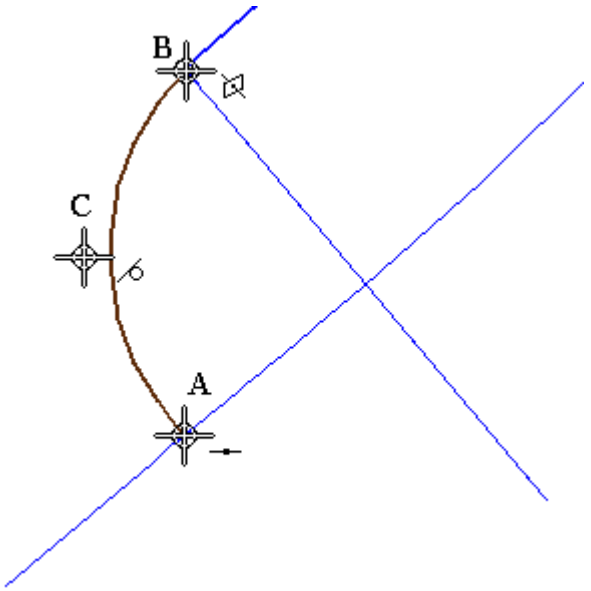

- Close the sketch, then click *Finish* on the command bar.

- Sketch another curve on the Right plane. Start the curve at the surface and end it at the pierce point for the ellipse.

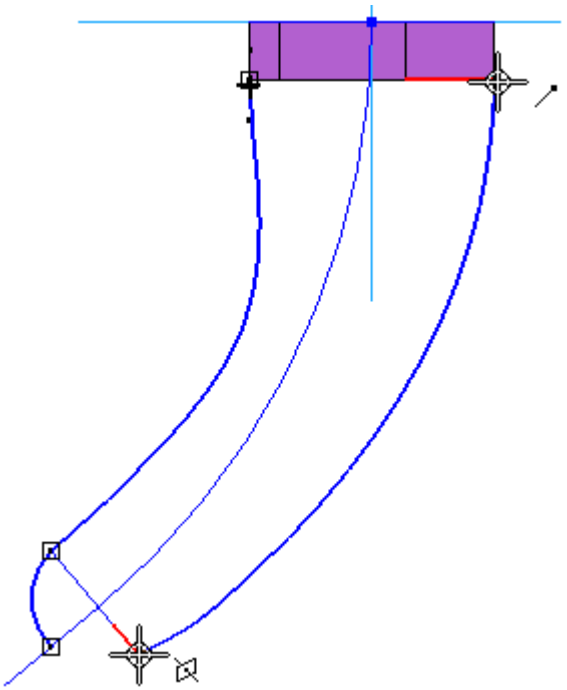

- Create an arc between the end of the curve just placed and the existing arc.

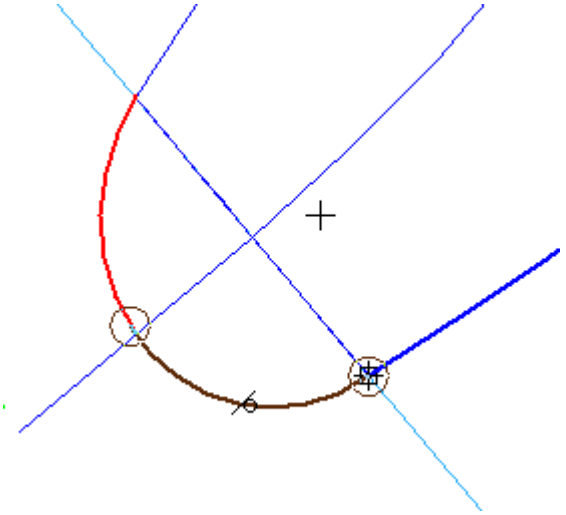

- Apply a tangent relation between the top of the curve (1) and surface. Also, define end connect and tangent relationships between the curve and arc (2), Ensure that an end connect relationship is shared with the two arcs (3).

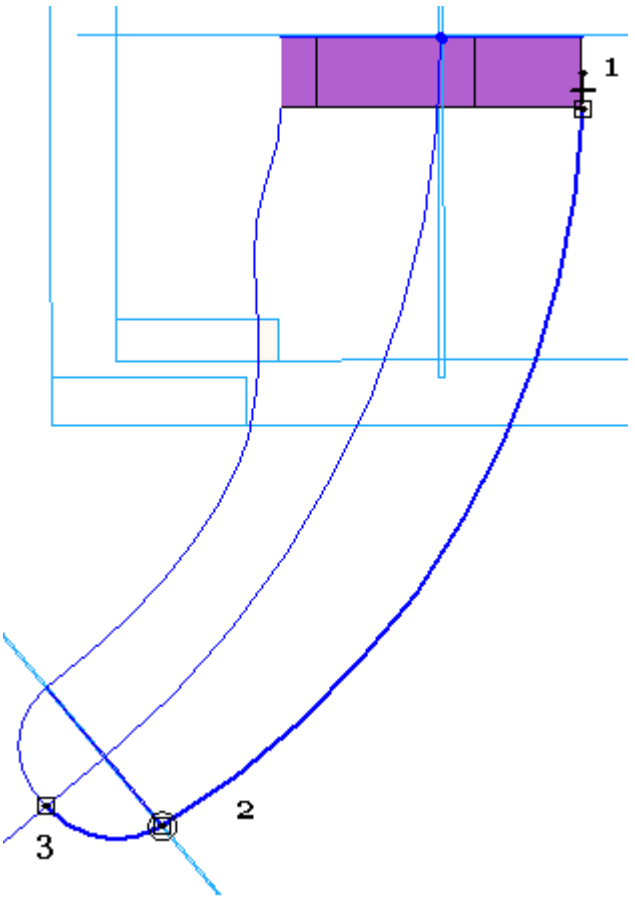

- Experiment with the shape of the curves using Edit Profile on the edit dialog. Edit the shape of the spline. The command bar will give several options for editing the curve's points, as well as the ability to add points.

  The curve's control points will be visible.

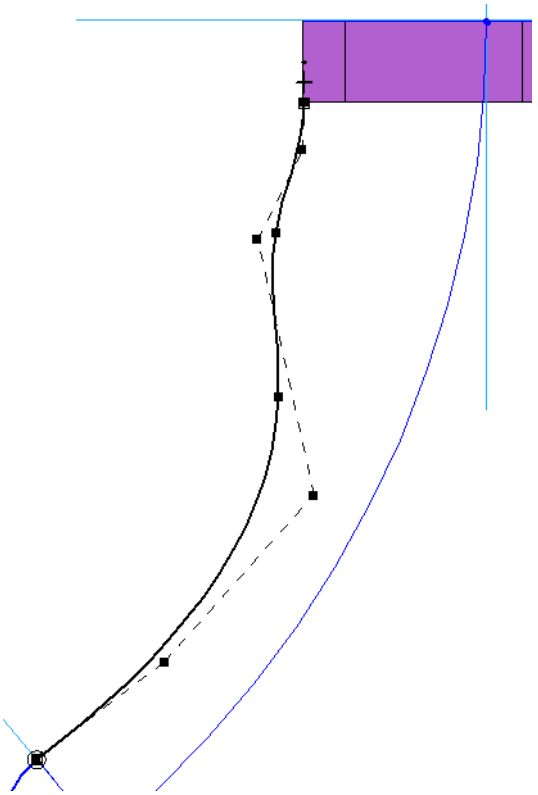

- Drag some of these points to observe how the movement of one point affects the entire curve.

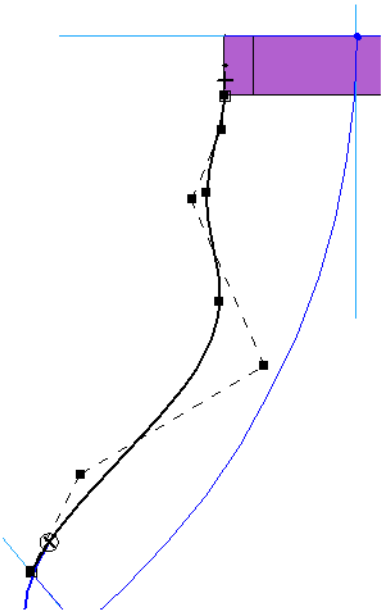

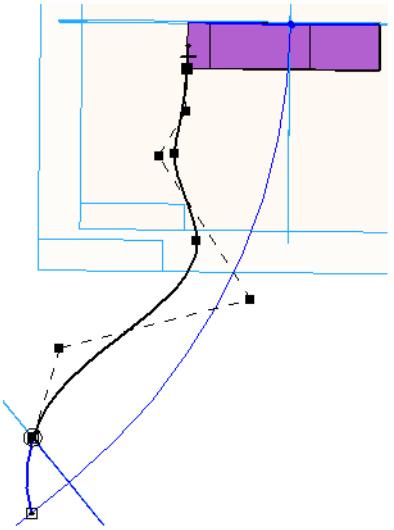

- Make a shape similar to the following.

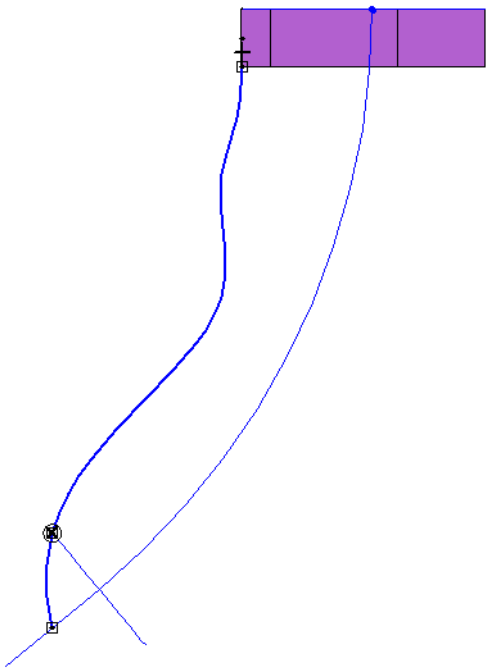

Create a BlueSurf

All of the curves necessary to create the razor's body exist. The Blue Surf command will be used to generate a surface based on a series of participating curves.

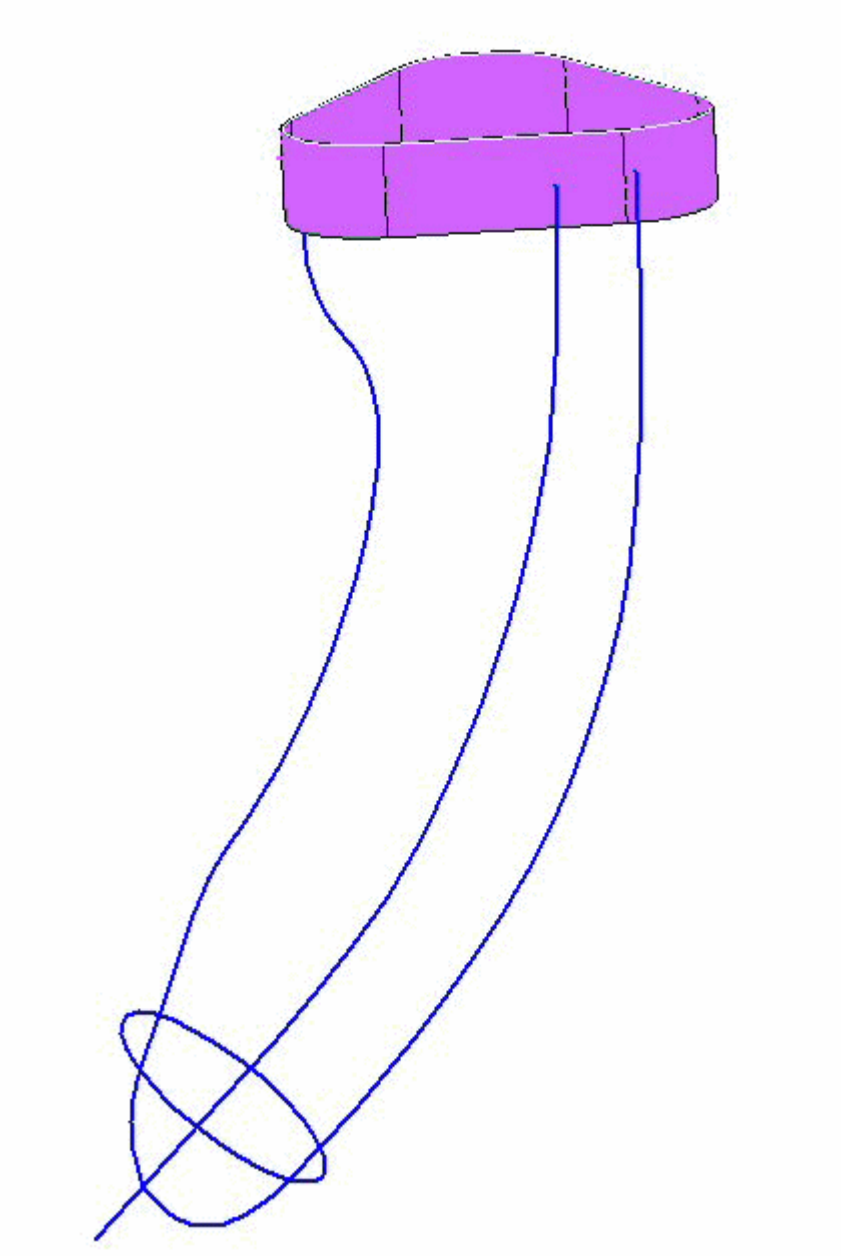

- Select Surfacing tab® Surfaces group® BlueSurf .

- In the *Add Cross Sections* step, select the point at the bottom of the curves.

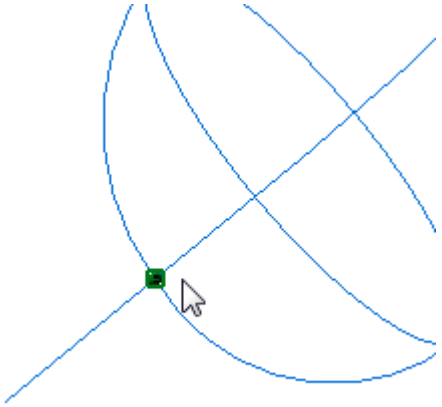

- Select the ellipse as the next cross section.

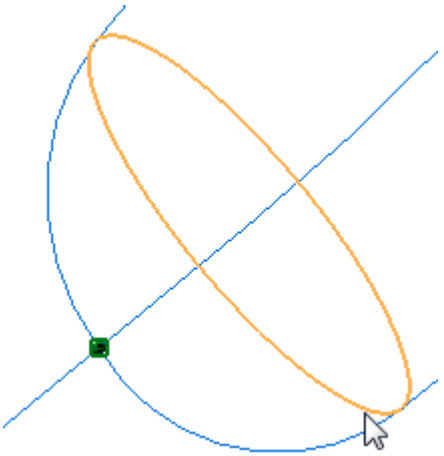

- For the final cross section, pick the bottom edge chain from the protruded surface placed in Step 1.

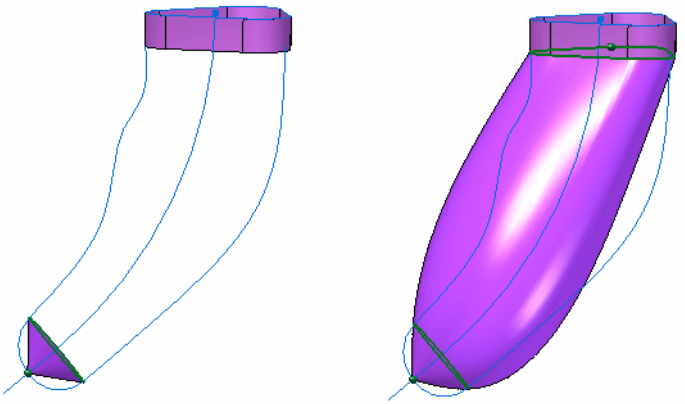

- Move to the *Guide Curves* step and select each of the “spine” curves and accept each.

  Note

  Use the Single option when selecting the curves to ensure you don’t pick the entire chain.

  The Blue Surf will update as shown in the following images.

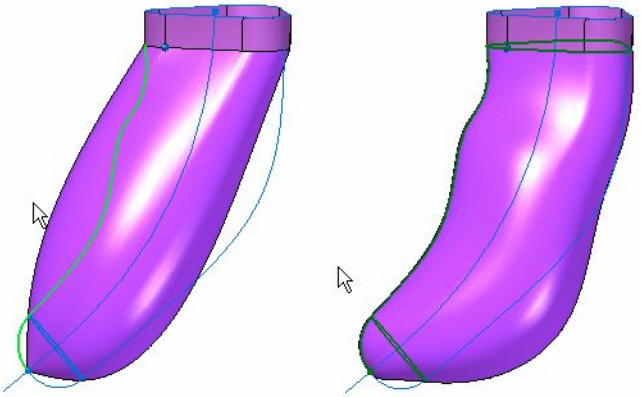

- Click *Preview*. The result should look similar to the following. Click*Finish*.

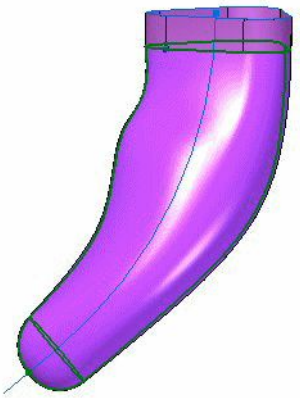

- Hide all sketches.

Create a bounded surface

Close off the top of the original extruded surface .

- Select the Bounded Surface command.
- Select each edge around the top.

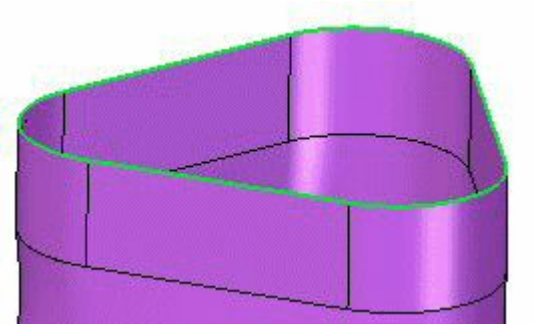

- Accept and click Preview. Click Finish.

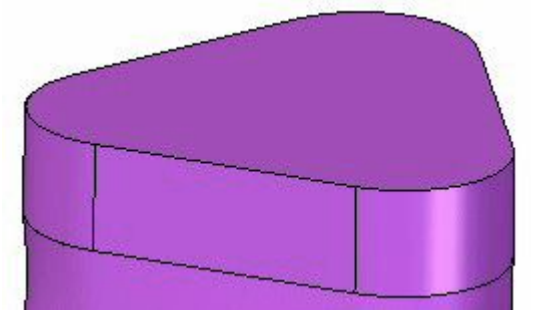

Stitch together the surfaces

The set of surfaces will be stitched together to form a solid body. The Stitched Surface command will be used .

- Select the Stitched Surface command. The Stitched Surface Options dialog will appear. Click OK to accept these options.

  Drag a box around all of the surfaces to select.

- Accept. Click Yes in response to the dialog regarding creation of a solid body.

Create a reference plane

Create an Angled Reference Plane off of the Front XZ plane, using the top bounded surface as the base of the profile plane. Orient it as shown below at an angle of 45°.

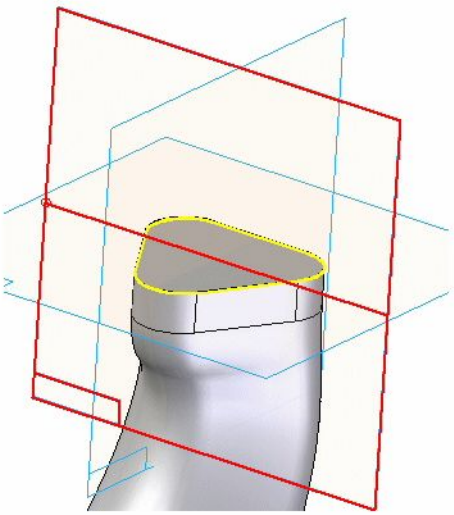

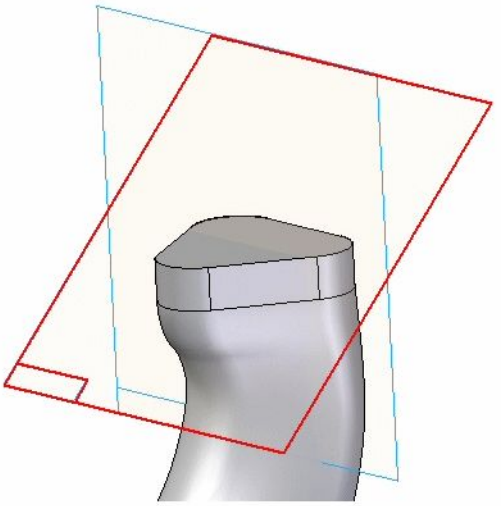

Create an opening for the power button

- Create a parallel plane offset 28.6 mm from the angled plane just created. Select Home tab® Solids group® Cut and sketch a profile on this new plane. Use two arcs defined by the radii shown.

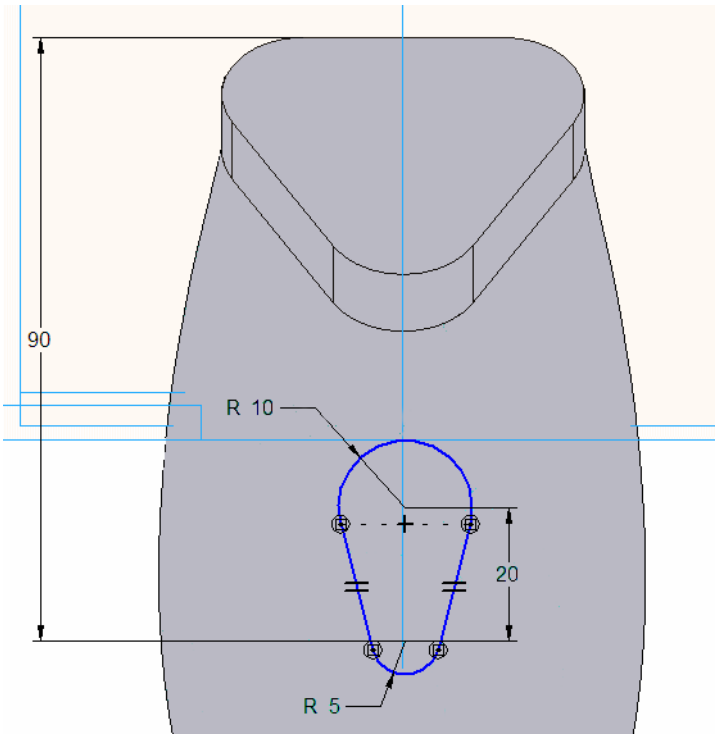

- Cutout the Blue Surf at a depth of 61 mm.

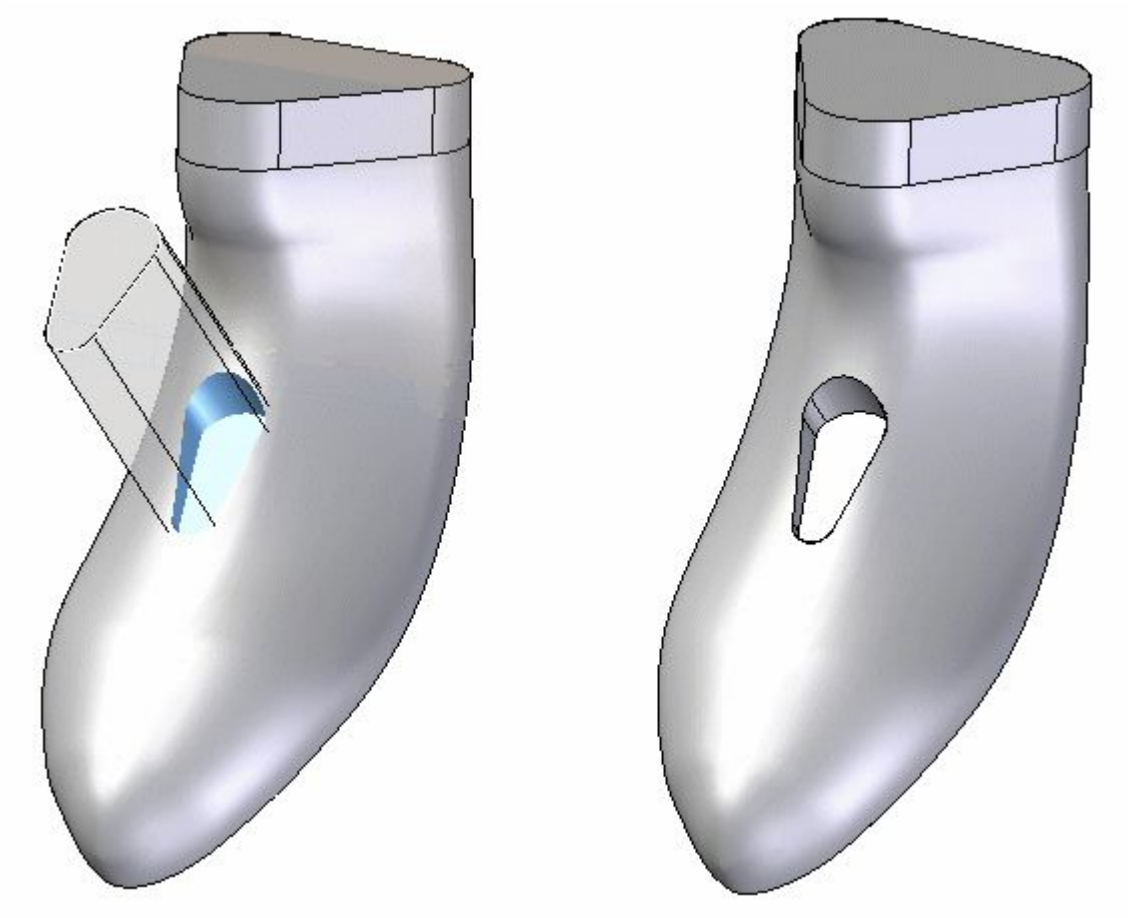

Create a port for the power cord

- Using the Cut command, sketch on the angled reference plane created in Step 9. Create a line as shown in the following image. Ensure that the left endpoint is created with a “point on element” relationship to the silhouette of the body (1).

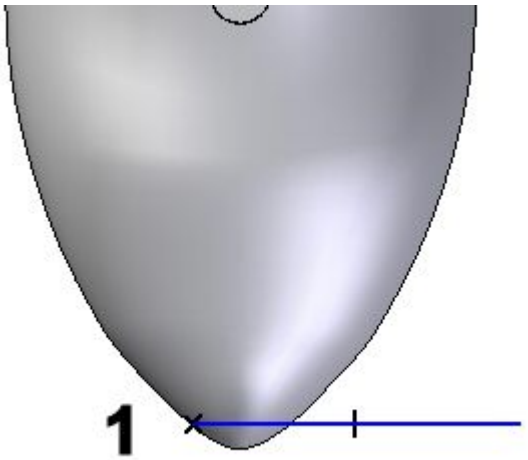

Dimension this line to the top edge of the razor body, with a value of 150 mm.

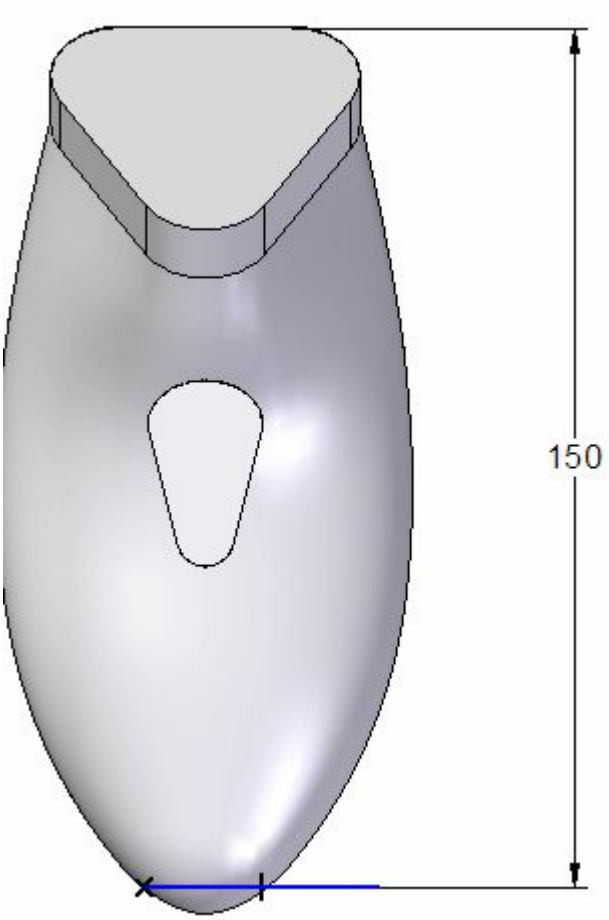

- Select the cut direction shown to remove material from the bottom. Use the Through-All extent.

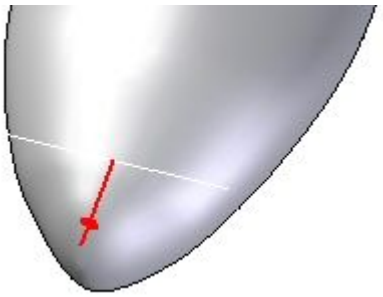

- Click Finish.

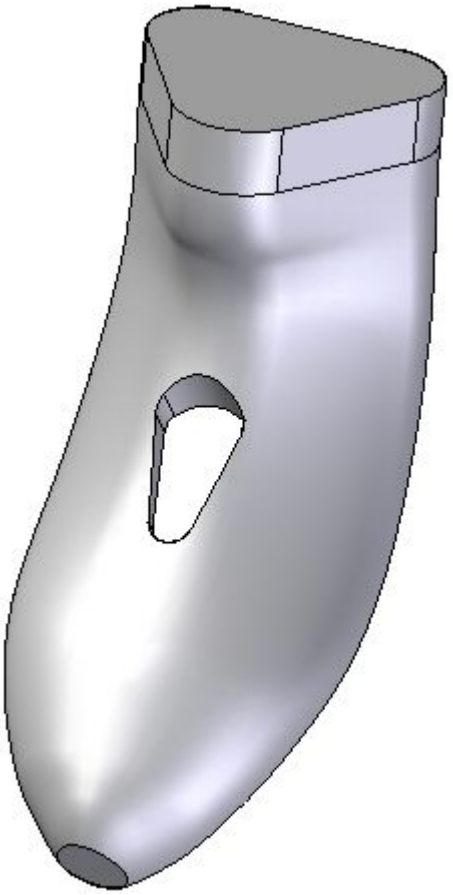

Split the solid body into two

- Click Parting Split .

- For the planar face selection, pick the angled plane previously defined in Step 9.

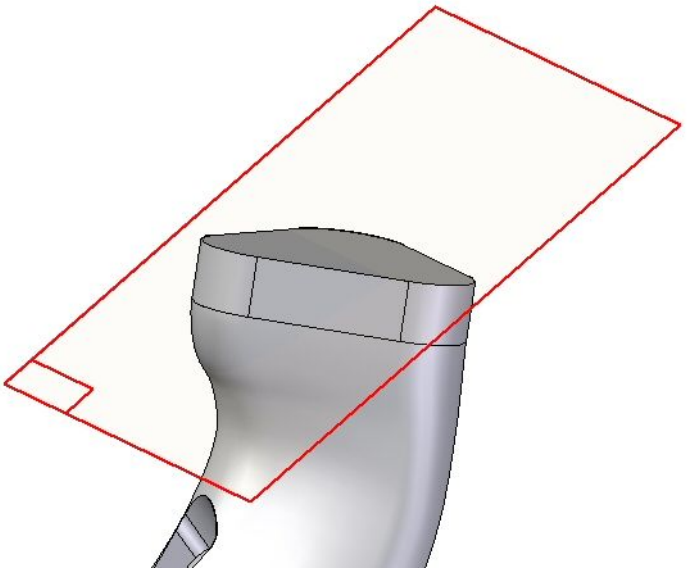

- For the face to be split, change the Select pulldown to Body and select the entire razor's body. Accept the body.

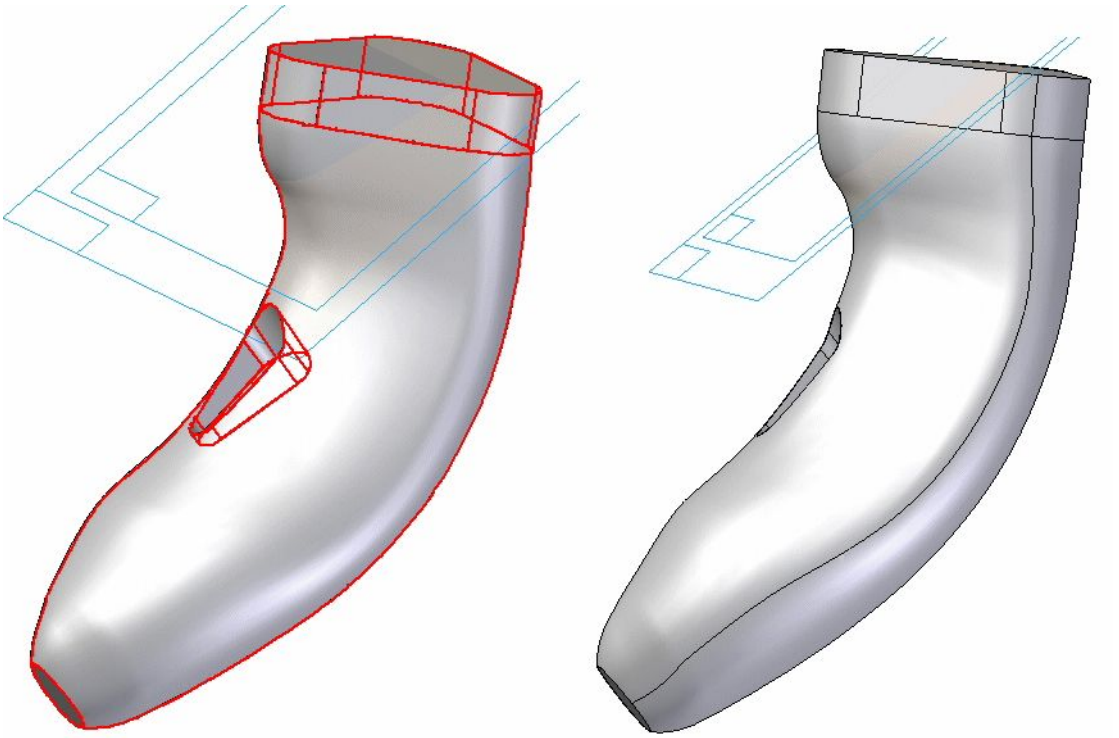

Offset the rear surface

- Select the Offset Surface command

- Offset the rear surface inside by 3 mm.

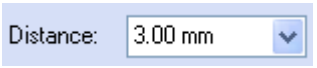

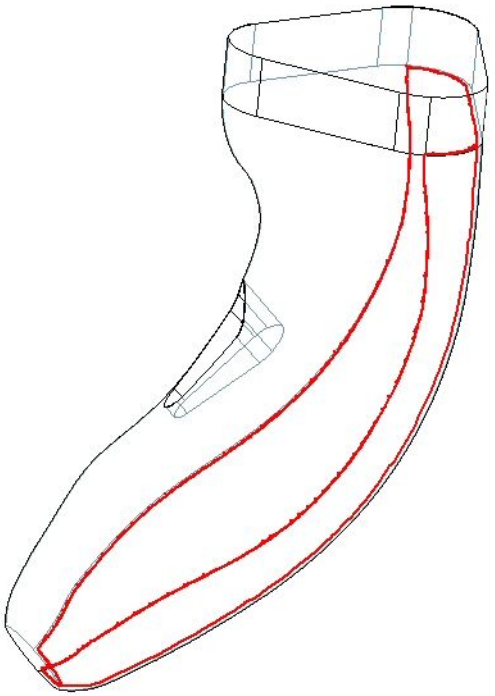

- Use the Extend Surface command to extend the new offset surface .

- Select the top edge and extend it with natural curvature a distance of 18.95 mm.

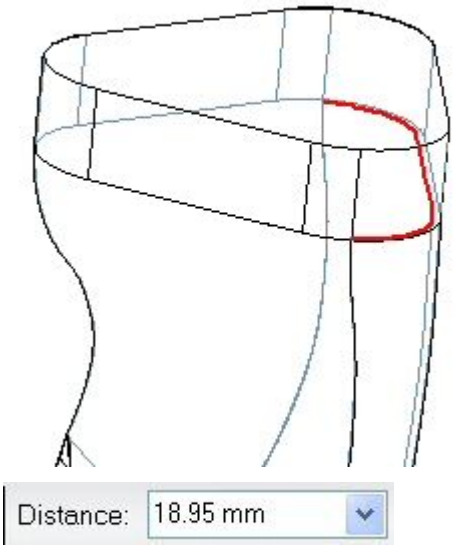

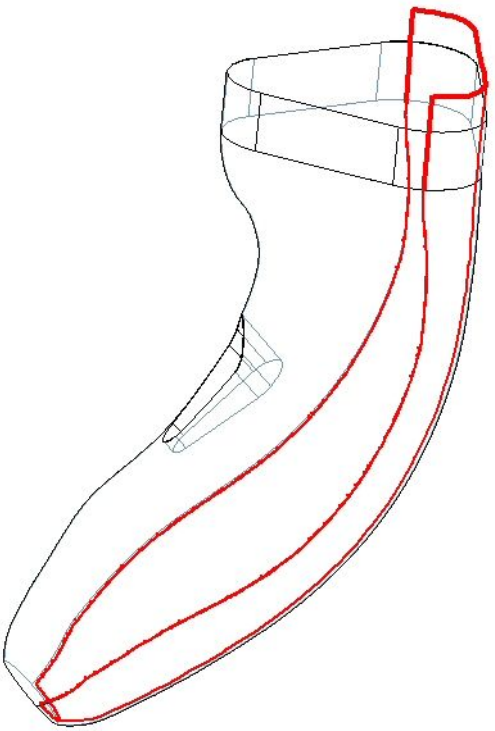

Create a space for additional razor components

- Use the Cutout command to create a feature needed for additional razor components.

- For the sketch plane, select Parallel Plane and pick the angled plane created in Step 9. Offset the new plane 58 mm.

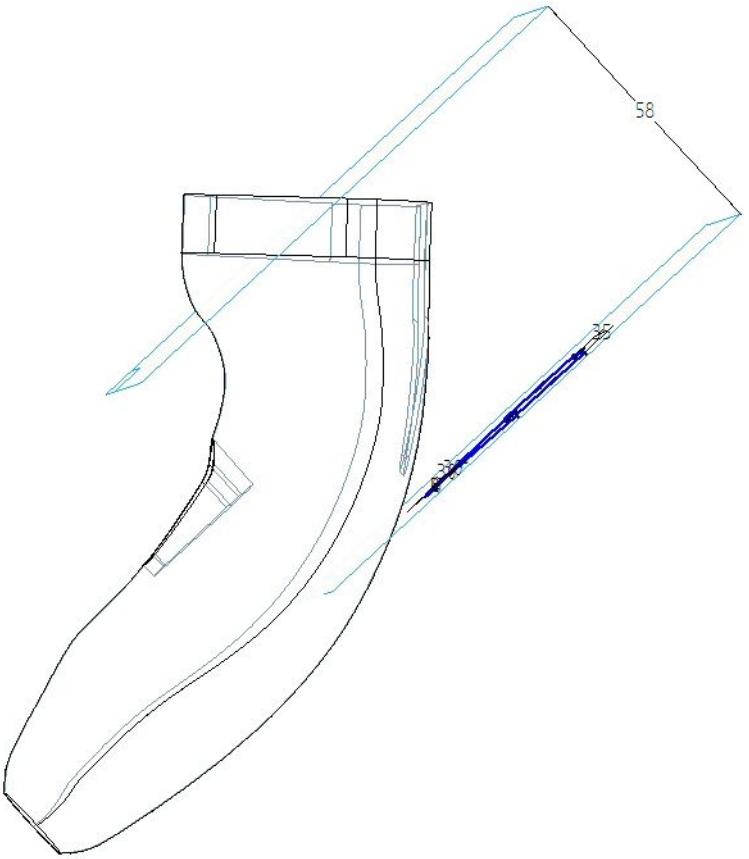

- Sketch the profile.

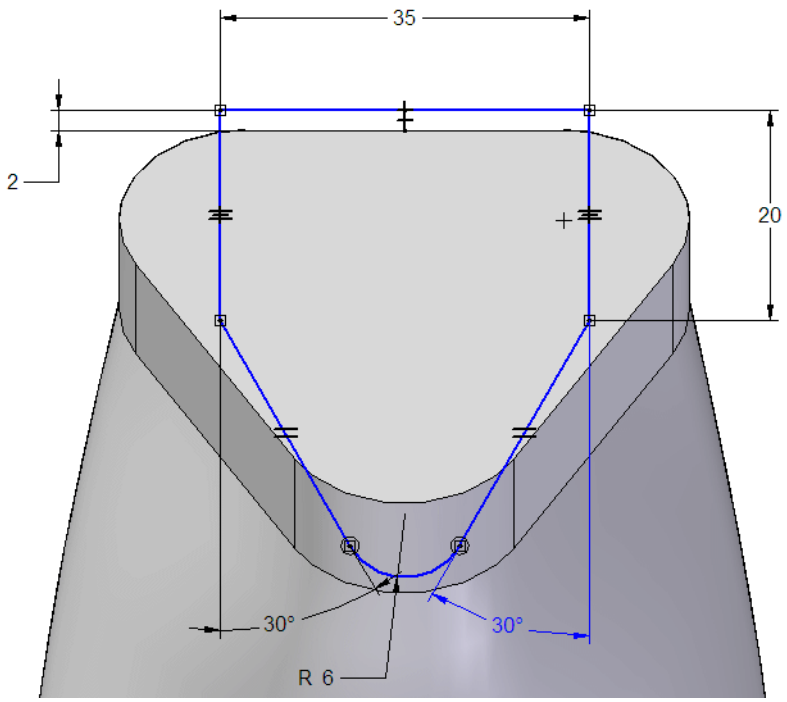

- For the cut depth (extent), the cut should terminate at the surface extended in Step 13. To do this, use the “From-To” extent option in the Cut command bar. The “From” entity will be the angled plane of the sketch; the “To” entity will be the surface extended in Step 13.

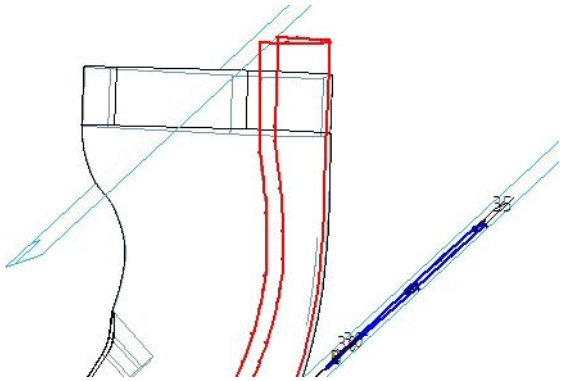

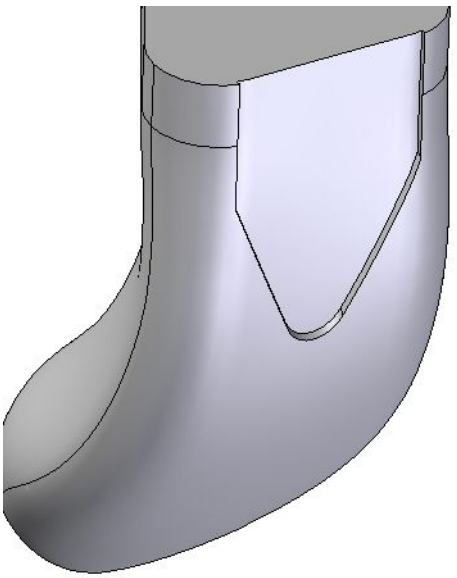

Hide the extended surface.

Apply a thin wall to the part

- Click the Thin Wall command .

- Use the Thin Wall command towards the outside of the part, defining a thickness of 2 mm.

- As open faces, select the top face, as well as the bottom surface of the power switch.

Note

Ensure the Select option is set to Single.

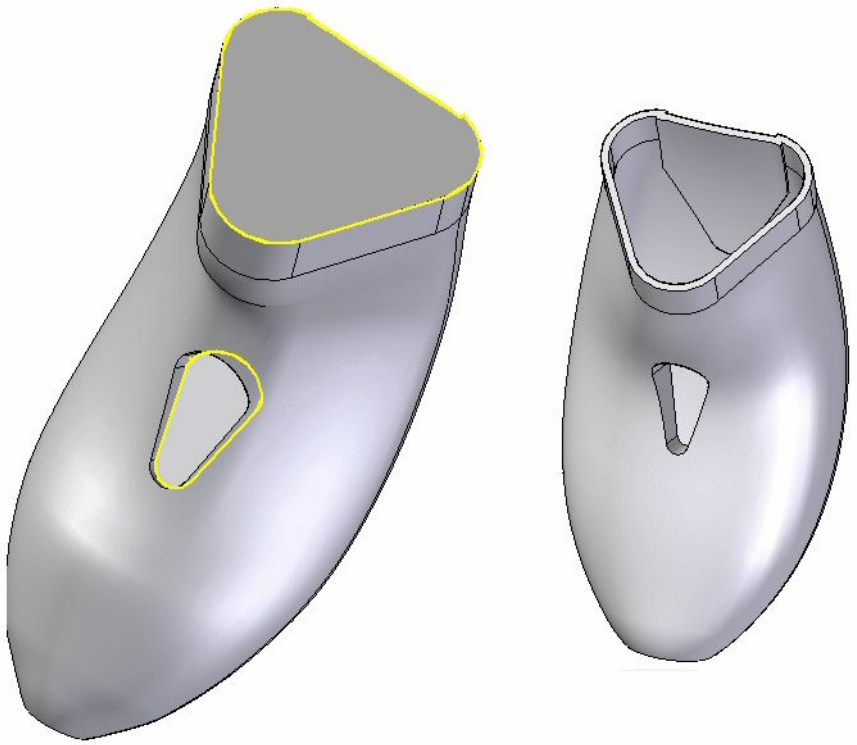

Round edges

Two edge chains will be rounded. Use the Round command .

- Select the two edge chains at the power switch opening's top and bottom, respectively. Apply a radius of 1 mm in each case.

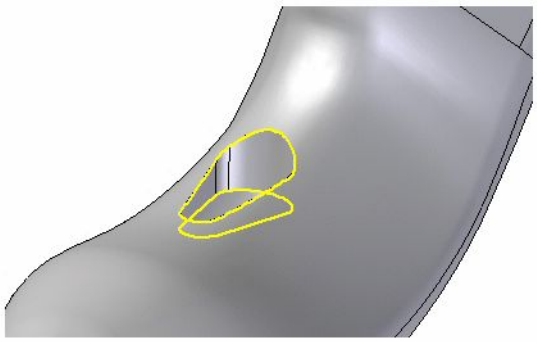

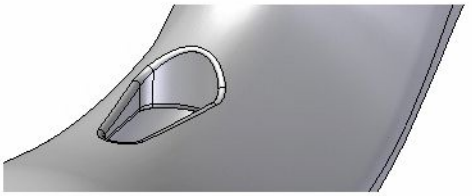

- This completes the construction of the razor body.

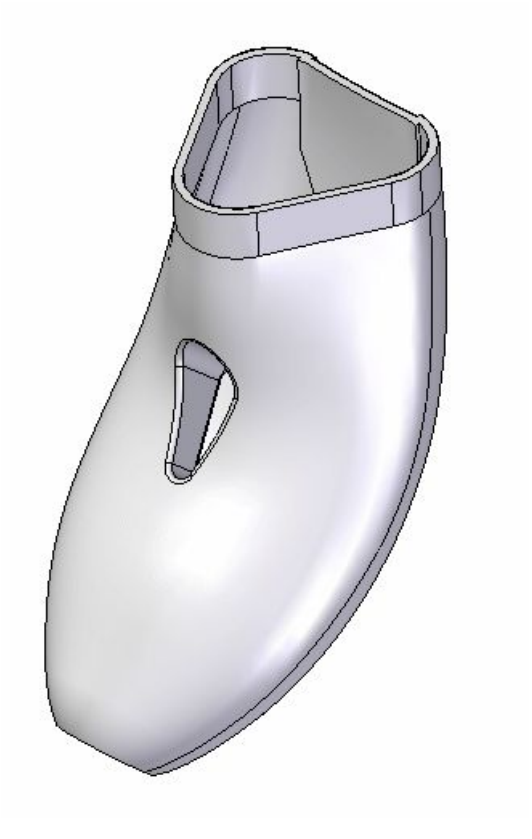

Summary

In this activity, you used several curve and surface creation and manipulation techniques to design a rotary razor body. The methods utilized in the construction of this model are commonly applied during the design of consumer products due to the emphasis on ergonomic and aesthetic requirements.

L Activity: Putting it all together

Open *surface lab 4-02.par*.

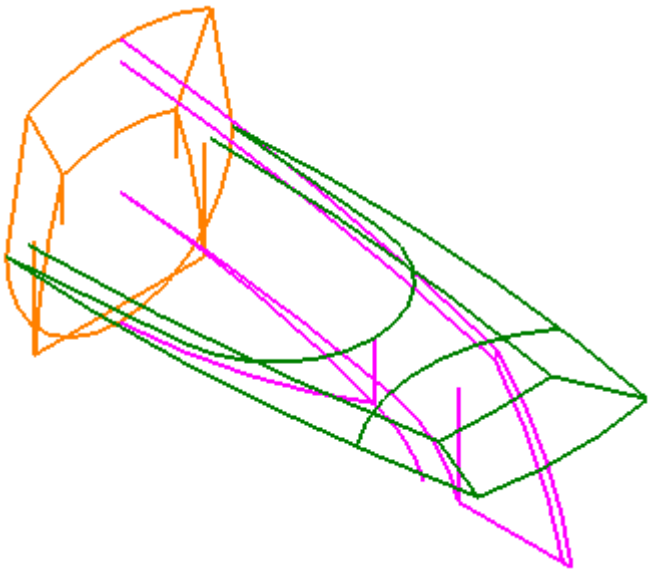

Note

Control Drawings were discussed in the previous lesson *Surface Modeling*. For this activity the control drawing is provided. For ease of viewing, the curves in each sketch are color-coded, and color references will be made when appropriate.

Control sketches (A=Right View-ORANGE, B=Front View-PURPLE, C=Top View-GREEN)

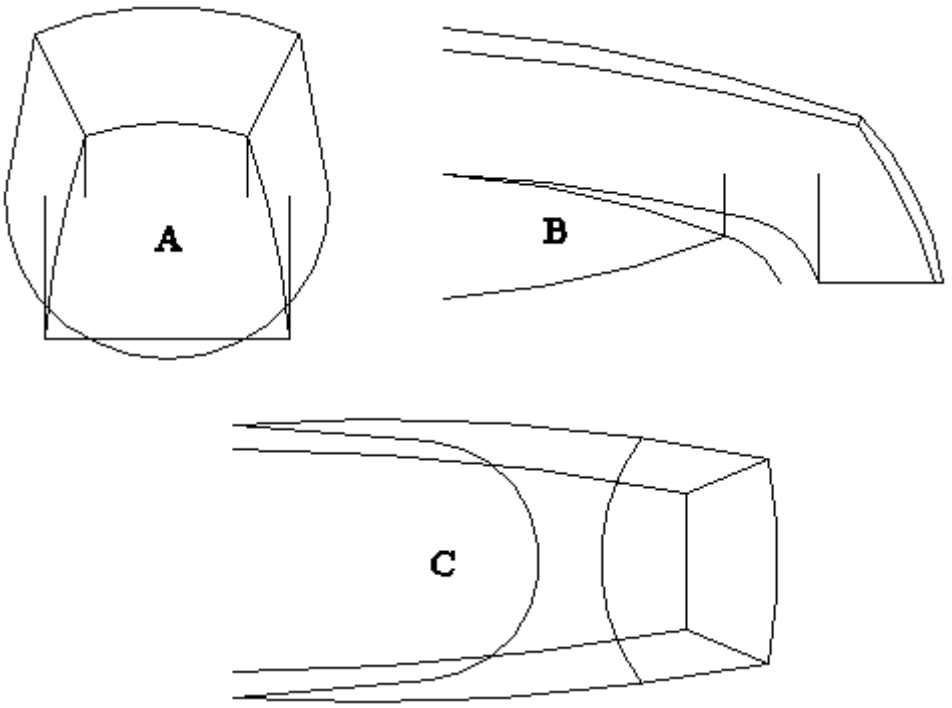

Construct the top surface

First you'll create intersection curves to be used to develop the top surface.

- Select Surfacing tab® Curves group® Cross .
- Ensure the *Select from Sketch* option is active.

- Select sketch element (A)—PURPLE— and then click the Accept button. Select both sketch elements (B)—GREEN— and then click the Accept button.

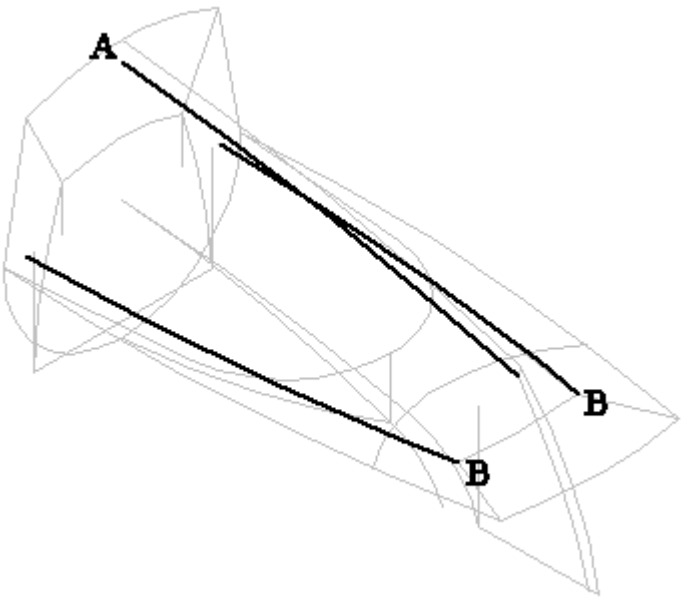

- Click *Finish*.

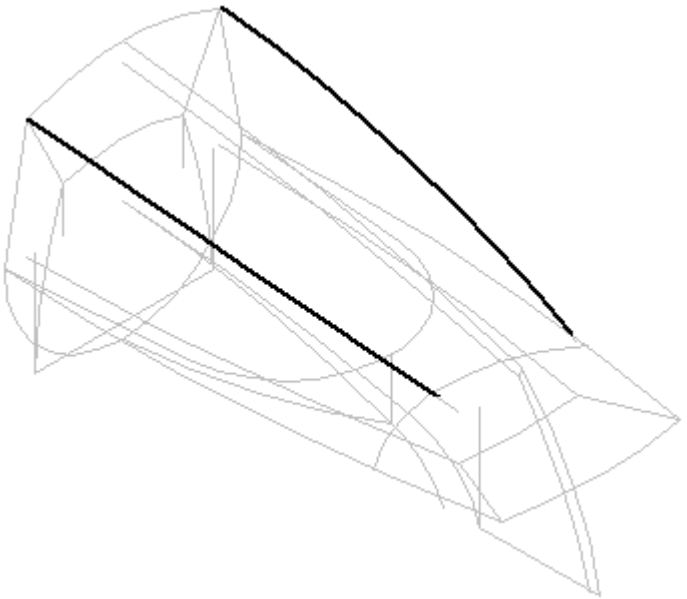

- Select **Cross Curve**.

- Select sketch element (A)—ORANGE— and then click the Accept button. Select sketch element (B)—GREEN— and then click the Accept button. Click *Finish*.

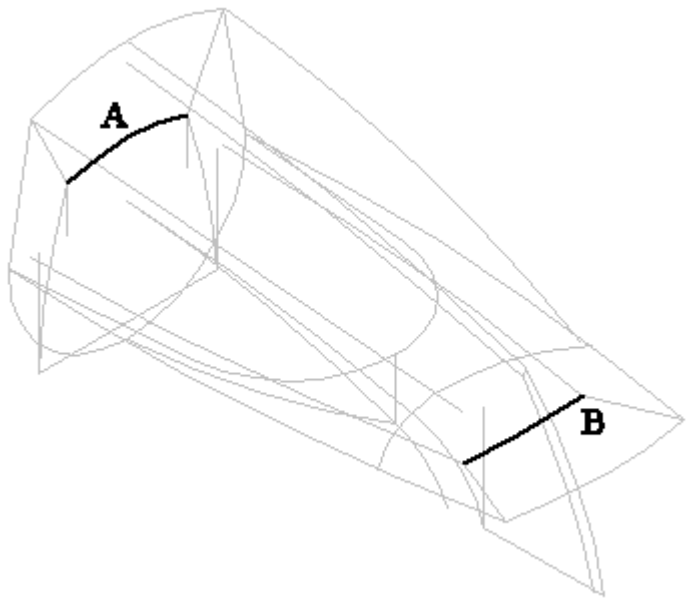

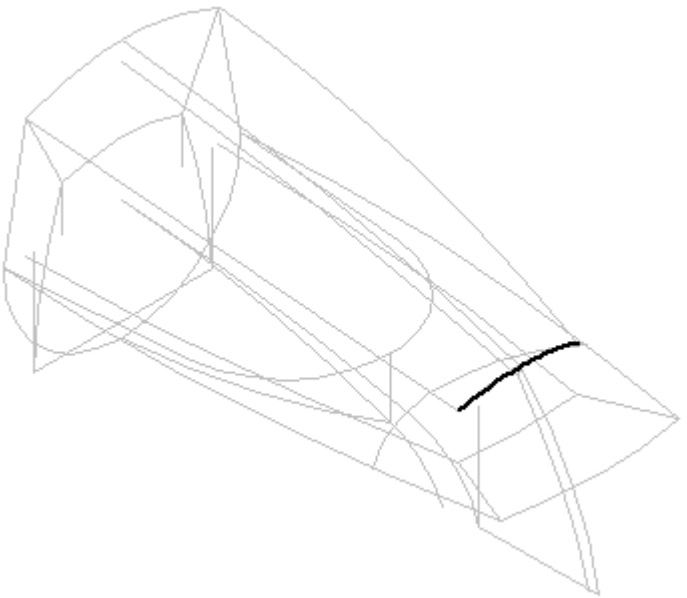

- To create the top surface, select Surfacing tab® Surfaces group® Swept .
- On the Sweep Options dialog box, select the *Multiple paths and cross sections* option.

- For the Path Step, select path (A) and click the Accept button or click the right mouse button. Select path (B) and click the Accept button or click the right mouse button.

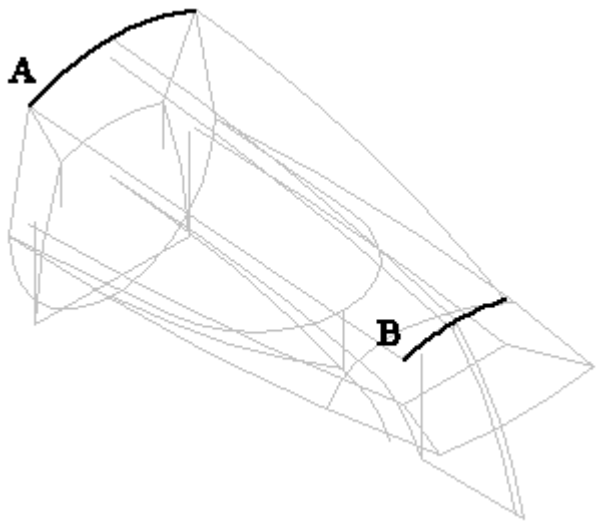

- Click *Next* to proceed to the Cross Section step.

- Select cross section (A) and click the right mouse button. Select cross section (B) and click the right mouse button. Select cross section (C) and click the right mouse button.

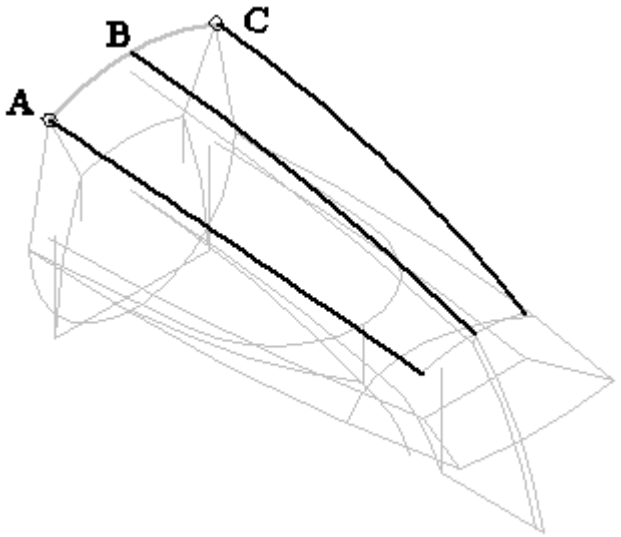

- Click *Preview* and then *Finish*.

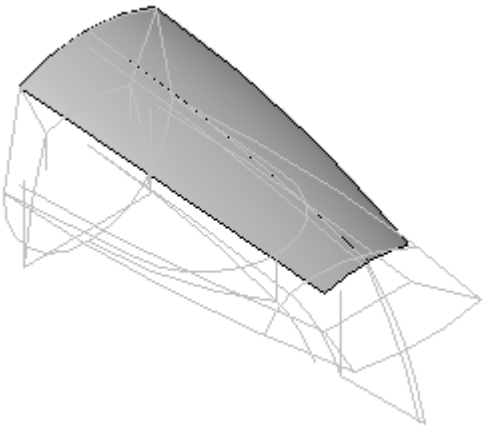

Create intersection curves to develop the front surface

- Hide the swept surface you just created.
- Select **Cross Curve**.
- Select sketch element (A)—PURPLE— and then click the Accept button. Select both sketch elements (B)—ORANGE— and then click the Accept button.

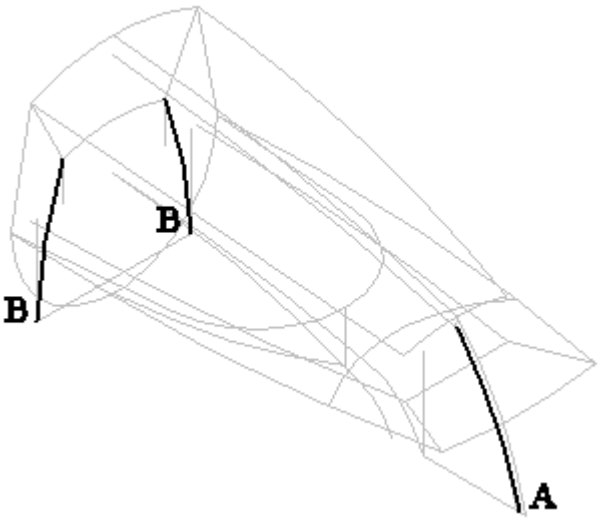

- Click *Finish*.

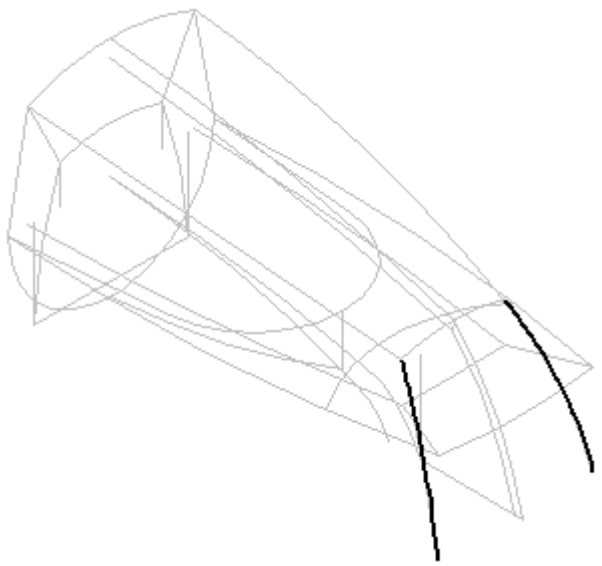

- Select **Cross Curve**.
- Select sketch element (A)—ORANGE— and then click the Accept button. Select sketch element (B)—GREEN— and then click the Accept button. Click *Finish*.

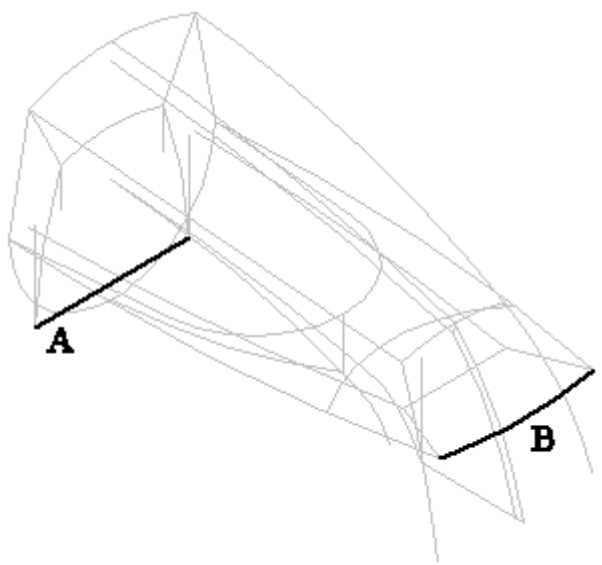

- Click *Finish*.

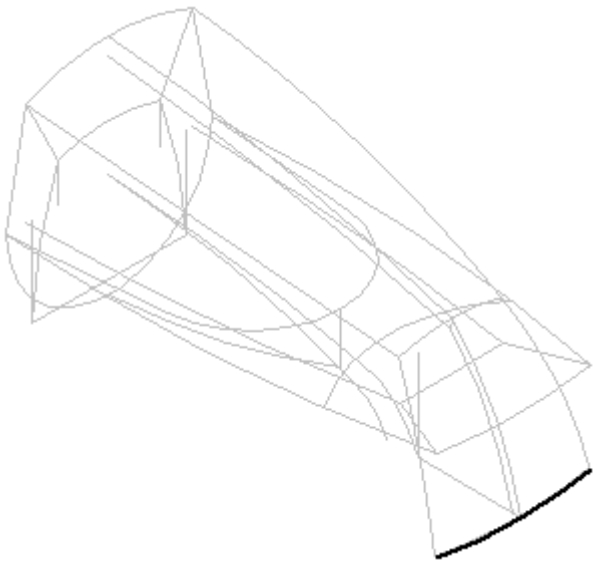

- Save the file.
- Select **Swept**. Click the *Multiple paths and cross sections* option and set the *Section Alignment* to Parallel.
- Use QuickPick to select path (A). Make sure you select the cross curve element and then click Accept. Select path (B) and click the right mouse button.

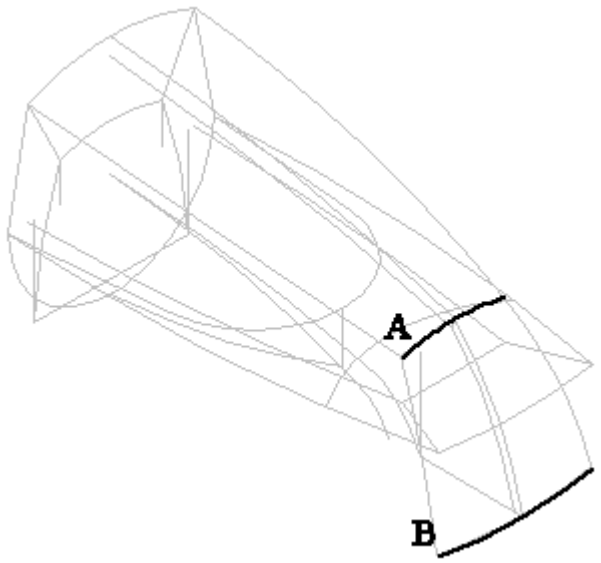

- Click *Next* to define the cross sections.
- Set the Select filter to *Single*. Select cross section (A) and click the right mouse button.
- Select cross section (B) and click the right mouse button.

- Select cross section (C) and click the right mouse button.

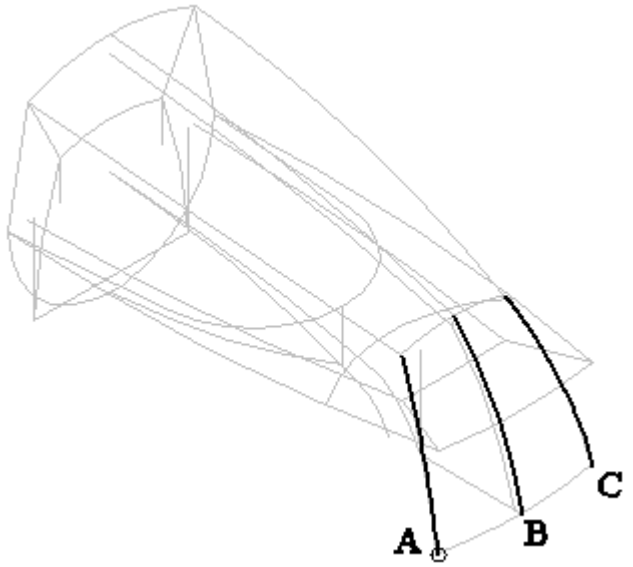

- Click *Preview* and then *Finish*.

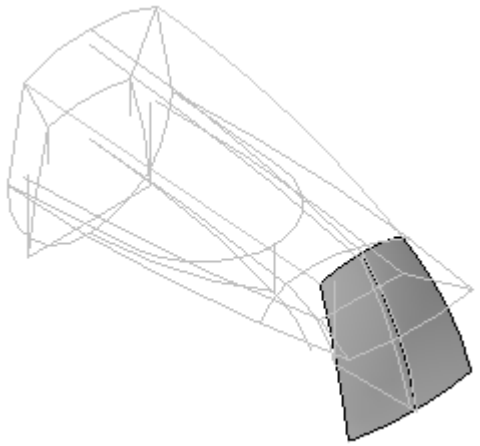

- Save the file.

Create intersection curves to develop the side surfaces

- Hide the swept surface you just created.
- Select **Cross Curve**.
- Change the Select field to *Single*.

- Select sketch element (A)—PURPLE— and then click the Accept button. Change the Select field to *Single*. Select both sketch elements (B)—GREEN— and then click the Accept button.

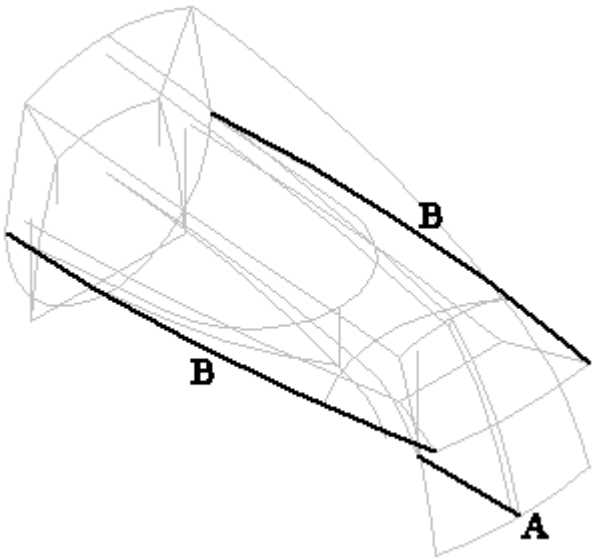

- Click *Finish*.

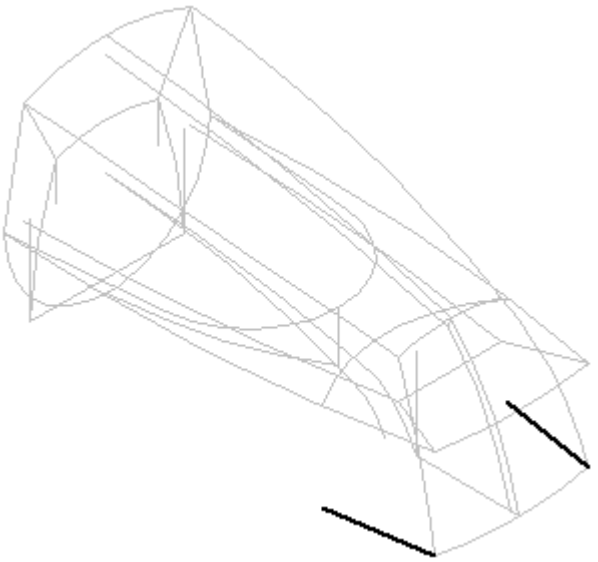

- Select **Cross Curve**.
- Set the Select field to Single. Select sketch elements (A)—PURPLE— and then click the Accept button.

Note

There are two elements in (A).

- Set the Select field to *Single*. Select both sketch elements (B)—GREEN— and then click the Accept button. Click Finish.

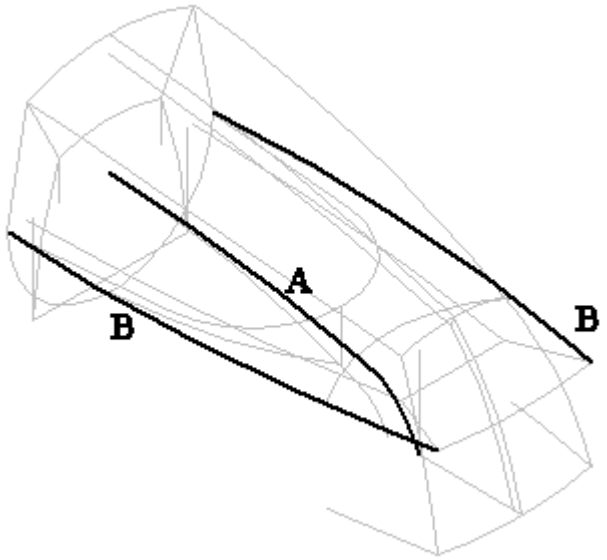

- Click *Finish*.

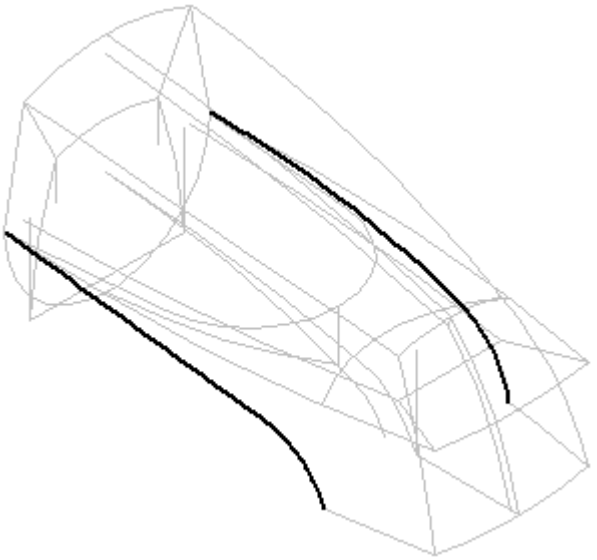

- Select Surfacing tab® Surfaces group® Bounded .

- Select the six edges as shown. Use QuickPick on edges A and B to make sure you select the cross curve edges.

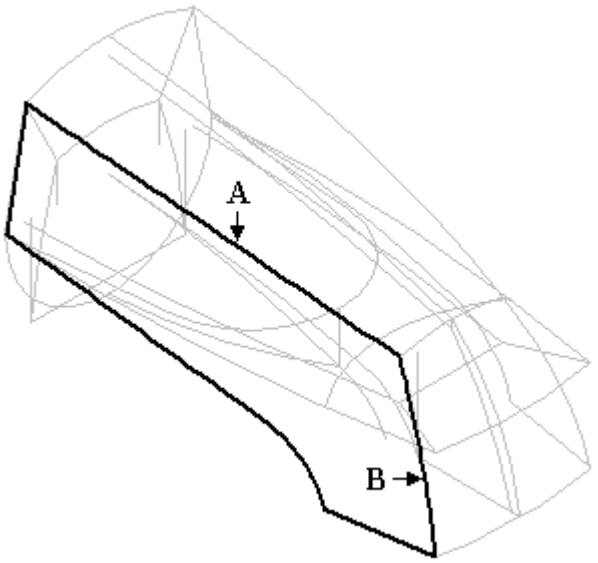

- Click the accept button. Ensure *Face Tangency* is off.

- Click *Preview* and *Finish*.

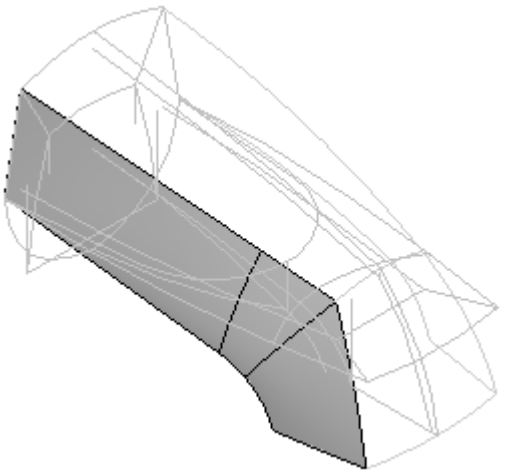

- Create another bounded surface on the other side.

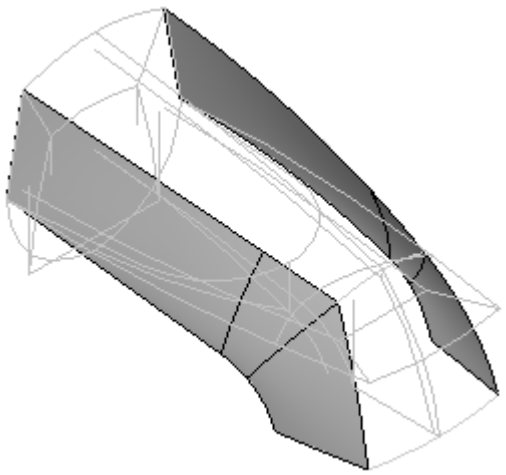

- Save the file.
- Show all of the surfaces created so far.

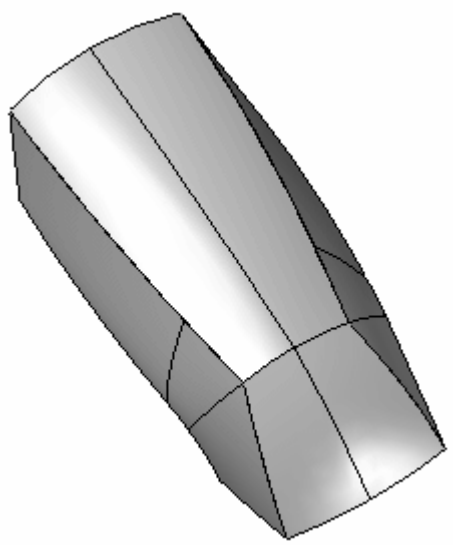

Create the bottom surface

- Show all base reference planes. Select Home tab® Sketch group® Sketch.

- Select the plane- *Right (yz)* for the first sketch.

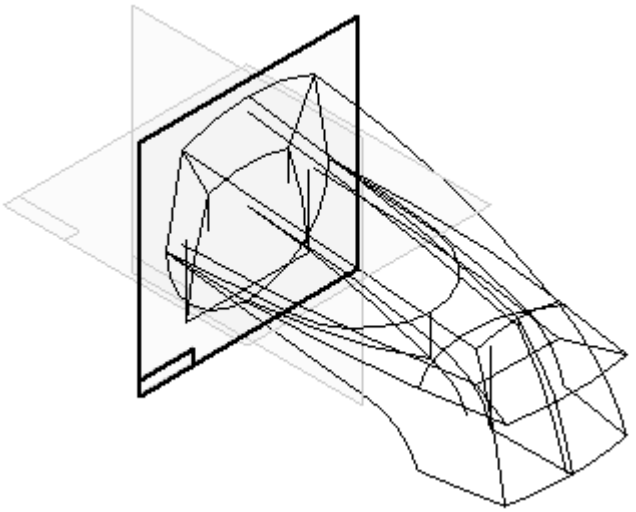

- Hide all surfaces.
- Draw the following sketch.

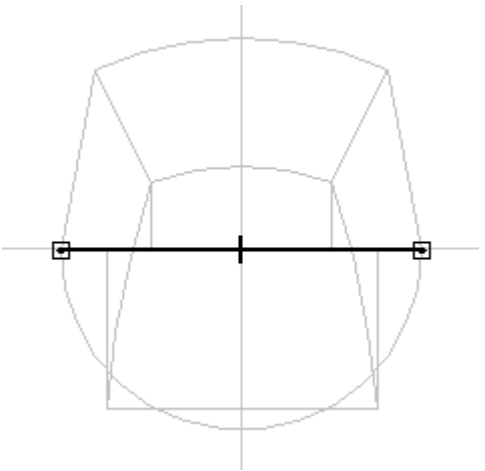

- Select *Close Sketch*.

- For the second sketch, create the sketch on a parallel plane as shown. To define the distance, click the keypoint as shown.

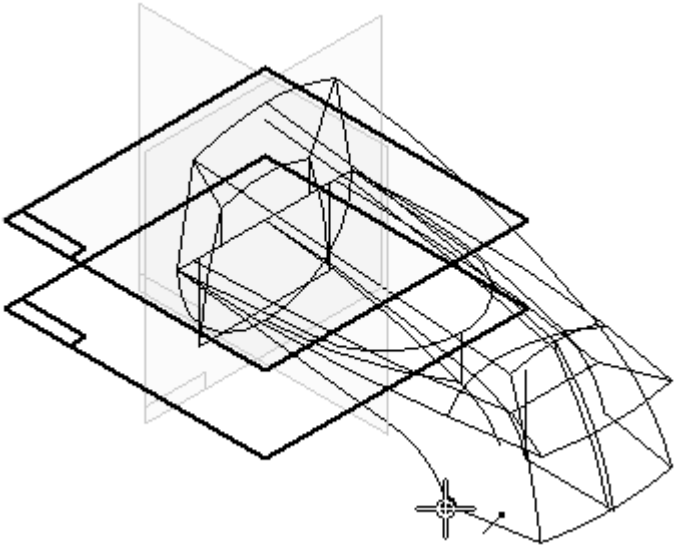

- Select Home tab® Draw group® Include and select the arc shown.

Note

Click OK on the Include options dialog box.

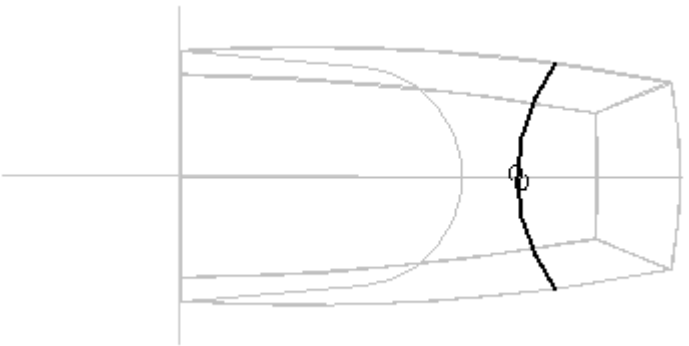

- Select *Close Sketch*.
- Select **BlueSurf**.

- Select cross section (A) and click the right mouse button. Select cross section (B) and click the right mouse button.

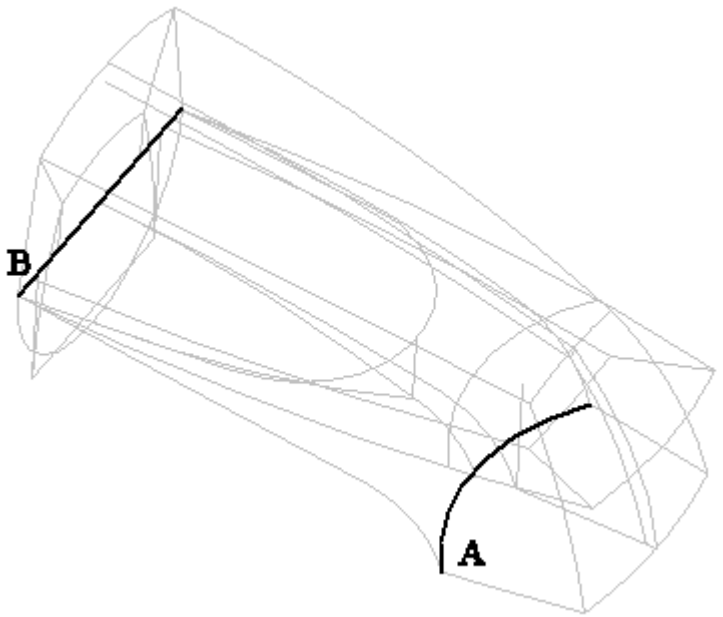

- Hide all of the base reference planes.
- Click the *Guide Curve* step.
- Select guide curve (C) and click the right mouse button.
- Set the Select filter to *Single* to select the two elements in guide curve (D). Select guide curves (D) and click the right mouse button.
- Set the select filter to *Chain* to select guide curve (E). Select guide curve (E) and click the right mouse button.

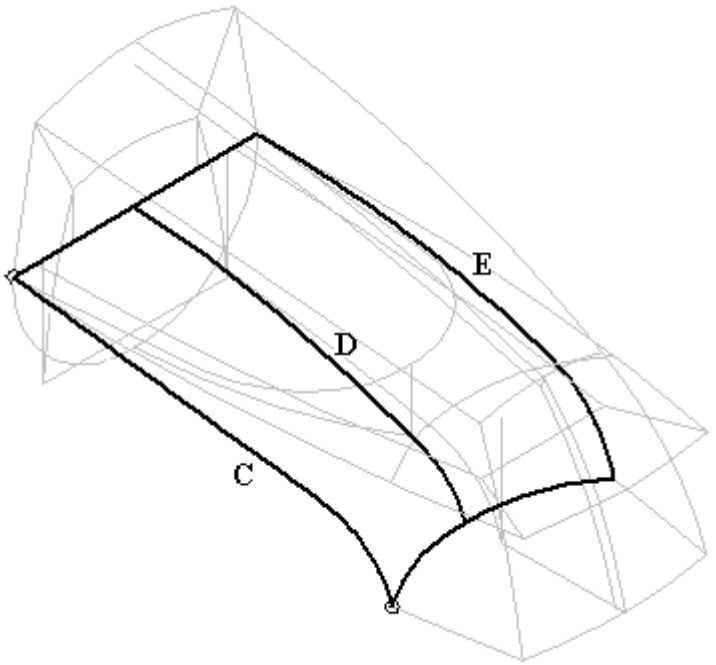

- Click *Preview* and *Finish*.

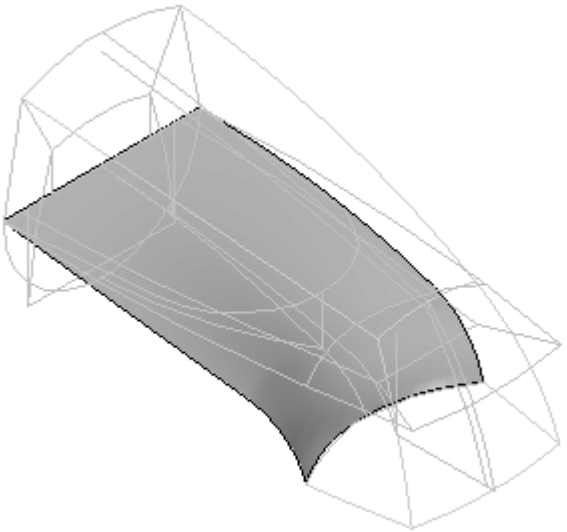

- Save the file.
- Show all of the surfaces created so far.

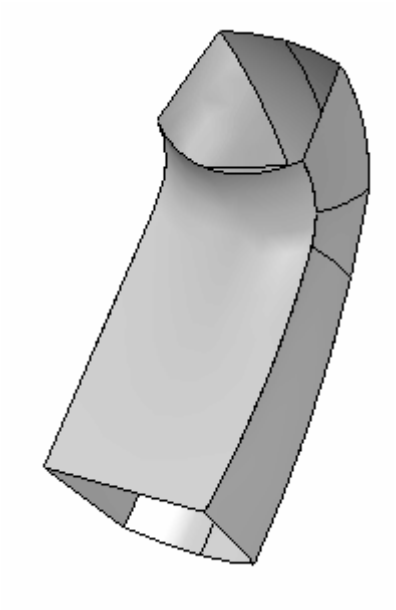

Add another surface

You will add the surface as shown below.

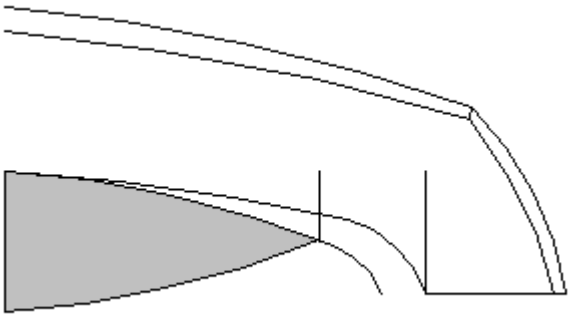

- Hide all of the surfaces except the BlueSurf just created.

- To create this surface, an intersection curve is needed between the bottom Bluesurf and an extruded surface created from the element shown in the control sketch. Create an extruded surface with a *symmetric* extent from the element shown in the image below. Don't be concerned with an exact distance, just extend it similar to the image.

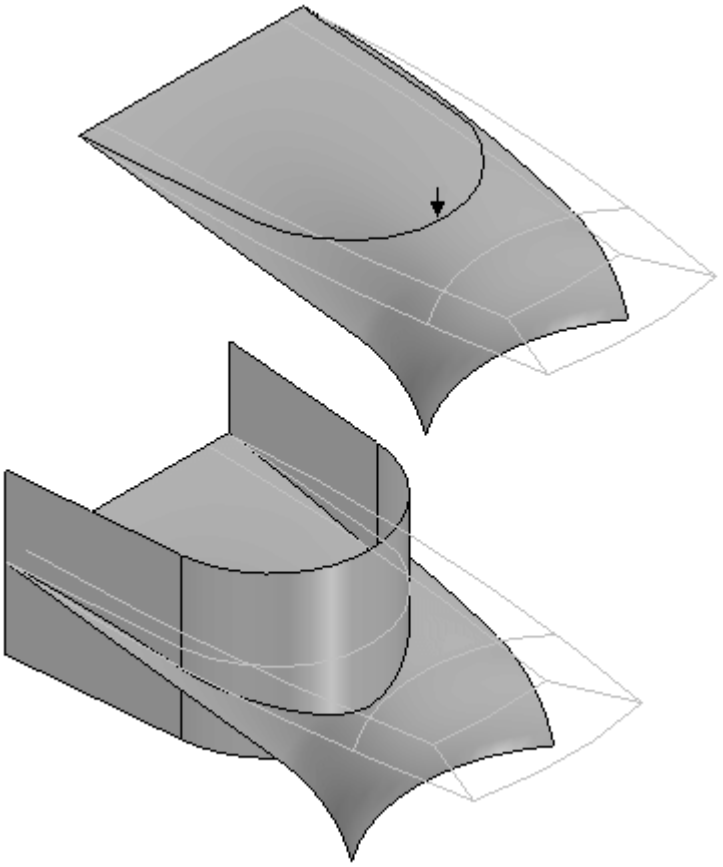

- Select Surfacing tab® Curves group® Intersection. Select the Bluesurf and the extruded surface as the surface set to intersect. The intersection curve is shown in the image below. Hide the extruded surface after the intersection curve is created.

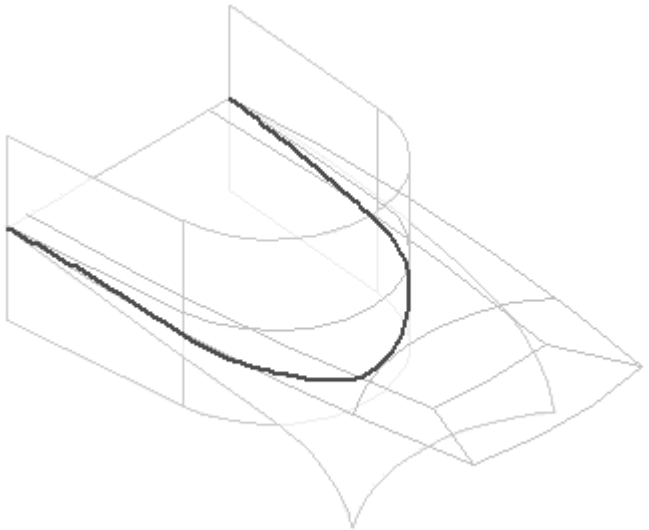

- Hide all sketches and curves. Select Surfacing tab® Surfaces group® Trim. Select and accept the Bluesurf. Change the select option to *Chain* . Select the intersection curve and make sure the arrow points in the direction shown.

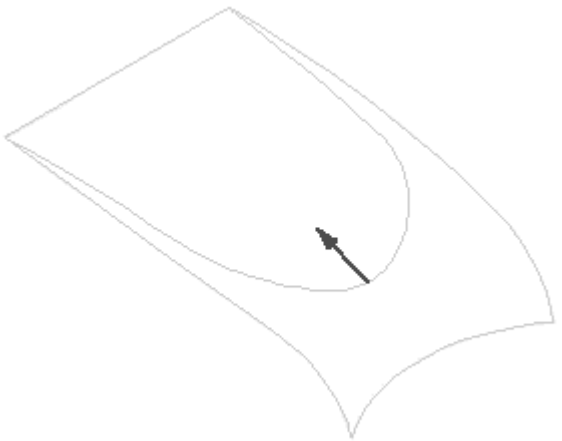

- Click *Finish*.

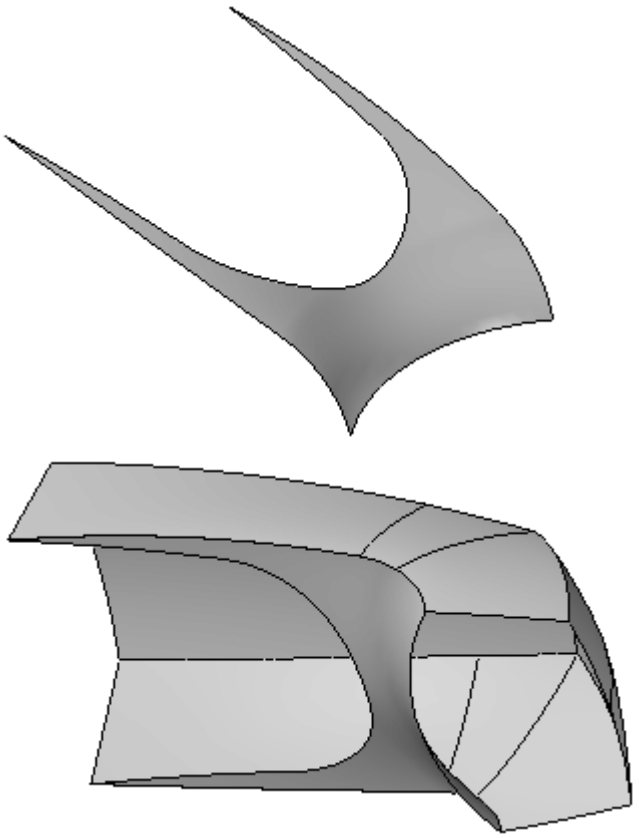

Create the final surface

- Show all sketches and curves.
- Select **BlueSurf**.

- Select the cross sections shown. Set the select filter to *Single* in order to select the first cross section (A). Select cross section A and right-click. For the second cross section (B), set the select filter to *Single* in order to select the cross section. The second cross section (B) has (3) segments. Use QuickPick and make sure you pick the intersection edges. Select cross section B and then right-click.

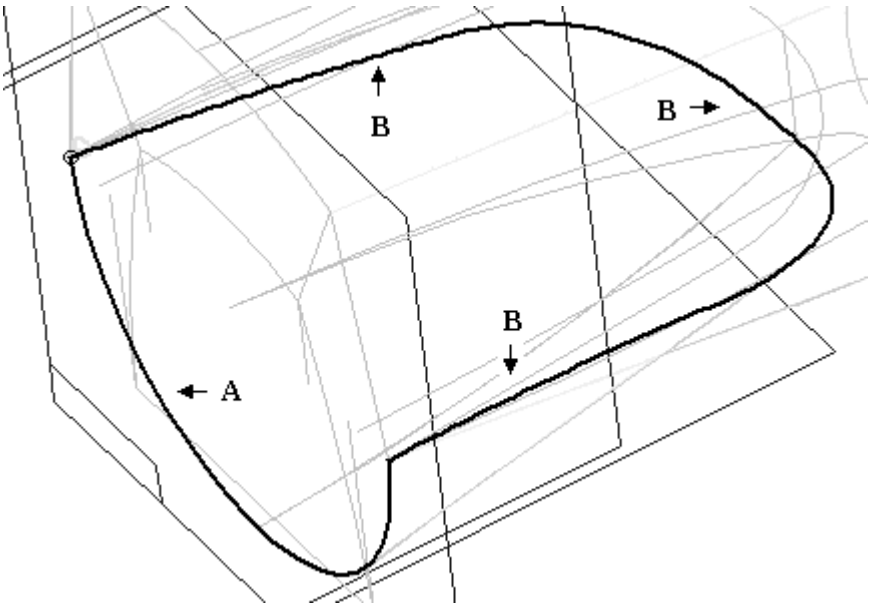

- After selecting cross sections (A) and (B), click the *Guide Curve* step. Set the select filter to *Single*, select the curve (C) and then right-click.

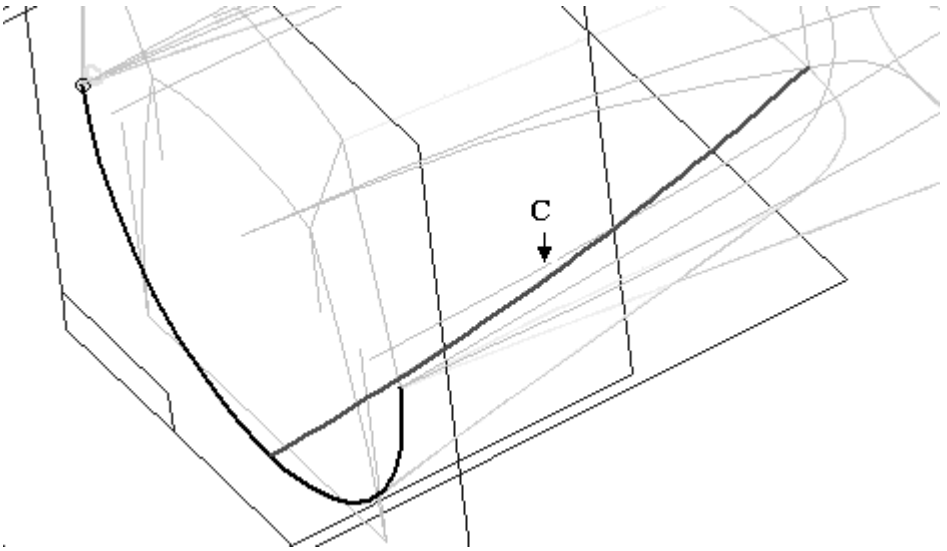

- Click *Preview* and then *Finish*.
- Choose **Select** and right-click. Select
  - Hide All® Sketches
  - Hide All® Curves
  - Show All® Surfaces

Note

Hide the extruded surface you created as a construction surface.

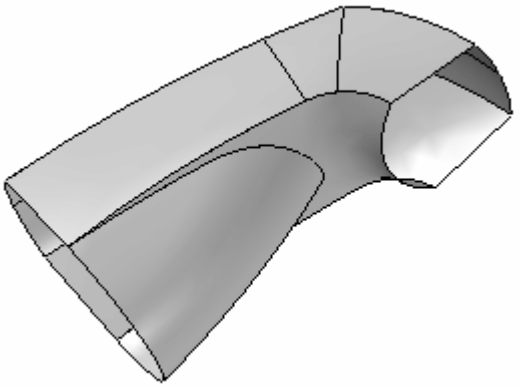

Cap the ends

- Select **Bounded** . Select the edges shown for (A) and make sure *face tangency* is turned off. Select the edges shown for (B) and again make sure *face tangency* is turned off.

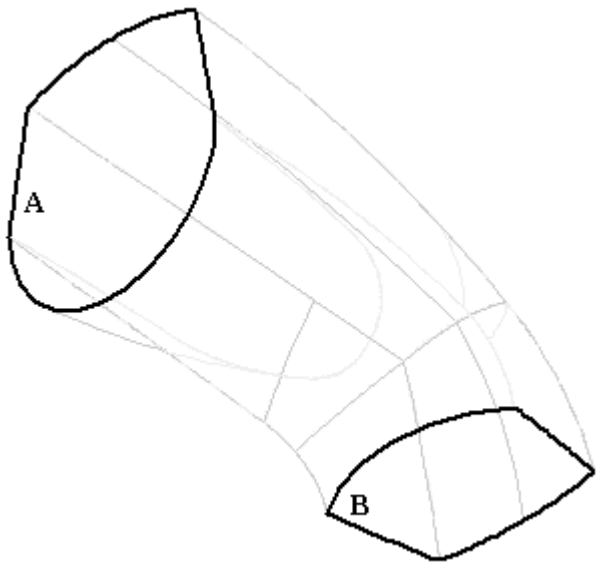

The surface model is complete.

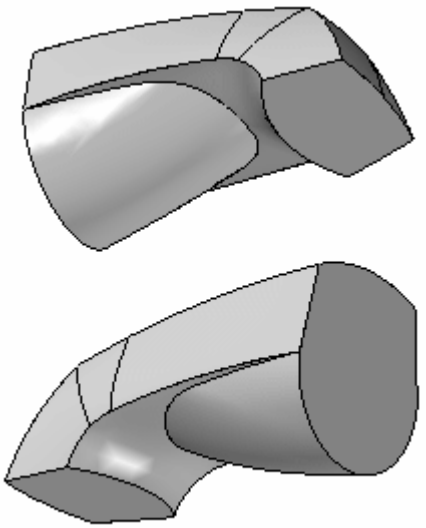

Stitch together the surfaces

The surface model can now be converted to a solid base feature.

- Select **Stitched Surface** and type .01 for the *Stitch tolerance*. Hit OK.

- Select all surfaces and then click the Accept button. Click Yes on the resulting dialog box.
- This completes the spout lab activity.

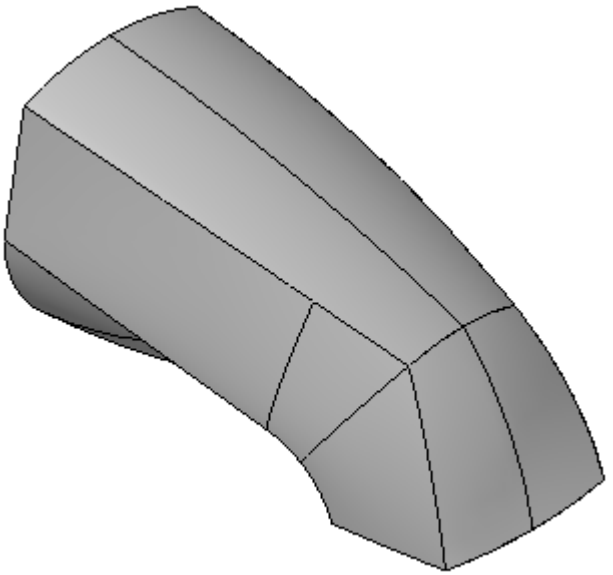

Note

You rarely get the surface you want from the initial surface creation method. You will probably need to manipulate the surface by: adding boundaries, creating an offset, extending, rounding, etc.

Solid Edge provides several commands for you to use to develop the final surface shape. A good understanding of these tools will help you to master surface modeling.

Summary

In this activity you learned how to create a solid model from control curves using multiple curve and surface manipulation techniques.