Assembly systems libraries

Publication Number
spse01645

Assembly systems libraries

Publication Number
spse01645

Proprietary and restricted rights notice

This software and related documentation are proprietary to Siemens Product Lifecycle Management Software Inc.

© 2010 Siemens Product Lifecycle Management Software Inc. All Rights Reserved.

All trademarks belong to their respective holders.

SOLID EDGE
VELOCITY SERIES

...with Synchronous Technology

Contents

Introduction **1-1**

Working with Systems Libraries in assemblies **2-1**

Activity – Systems library **3-1**

Activity – Systems library **A-1**

Place the motor on the plate A-1
Use Inter-part to associate the holes in the motor to the holes in the plate A-5
Create holes in the plate from the Inter-Part copy A-6
Create the pocket on the plate A-9
Place the first fastener A-12
Pattern the fasteners A-14
Create the systems library A-16
Place the systems library into an assembly A-19
Place more occurrences of the system library A-26
Activity summary A-26

Lesson

1 *Introduction*

Welcome to self paced training for Solid Edge. This course is designed to educate you in the use of Solid Edge. The course is self-paced and contains instruction followed by activities.

Solid Edge self-paced courses

- **spse01510**—Sketching
- **spse01515**—Constructing base features
- **spse01520**—Moving and rotating faces
- **spse01525**—Working with face relationships
- **spse01530**—Constructing treatment features
- **spse01535**—Constructing procedural features
- **spse01536**—Modeling synchronous and ordered features
- **spse01540**—Modeling assemblies
- **spse01541**—Explode-Render-Animate
- **spse01545**—Creating detailed drawings
- **spse01546**—Sheet metal design
- **spse01550**—Practicing your skills with projects
- **spse01560**—Modeling a Part Using Surfaces
- **spse01610**—Solid Edge frame design
- **spse01640**—Assembly patterning
- **spse01645**—Assembly systems libraries
- **spse01650**—Working with large assemblies
- **spse01655**—Revising assemblies
- **spse01660**—Assembly reports
- **spse01665**—Replacing parts in an assembly

- **spse01670**—Designing in the context of an assembly
- **spse01675**—Assembly features
- **spse01680**—Inspecting assemblies
- **spse01685**—Alternate assemblies
- **spse01690**—Virtual components in assemblies
- **spse01695**—XpresRoute (tubing)
- **spse01696**—Creating a Wire Harness with Harness Design
- **spse01424**—Working with Solid Edge Embedded Client

Start with the tutorials

Self-paced training begins where tutorials end. Tutorials are the quickest way for you to become familiar with the basics of using Solid Edge. If you do not have any experience with Solid Edge, please start by working through the tutorials for basic part modeling and editing before starting this self-paced training.

Lesson

2 Working with Systems Libraries in assemblies

When building assemblies, you often need to use the same group of parts more than once. This group of parts may also need the same feature modification made to a mating part in the assembly to facilitate placement of the group of parts.

For example, you may need to place a bracket (A) and its mounting bolts and washers (B) in many different assemblies, or many times in one assembly. The bolts may also need mounting holes in the part (C) to which they are fastened.

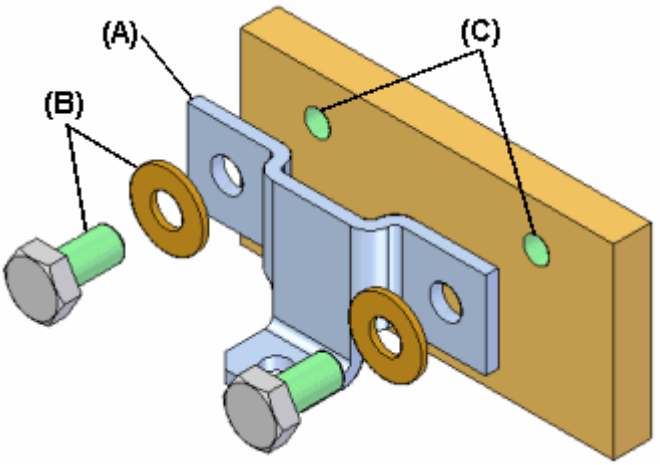

You can use the systems library functionality in Solid Edge to define the group of parts, features, and assembly relationships so you can reuse them easily later.

The parts, features, and relationships for a systems library member are stored in an assembly document you define.

A systems library document can consist of the following:

- Complete subassembly documents
- Part documents
- Features that are associative children of one of the part documents

Creating Systems Library members

When creating a new systems library member, you must adhere to the following rules:

- You can only select parts and entire subassemblies that are in the top level assembly.

- You cannot create a systems library member when working in an alternate assembly. You can use the Save Member As command to save a copy of the alternate assembly as a normal assembly to use this functionality.
- You cannot create a systems library member when you are in-place activated in a subassembly.

Creating a new Systems Library member

You create a new systems library member using the Create Systems Library command on the Home tab in the Systems group. When you click the Create Systems Library button, a command bar guides you through the steps required to create the systems library member:

- Selecting the assembly components you want
- Selecting the features you want to capture (optional)
- Viewing the captured relationships
- Defining the new assembly document name, template, and location

Selecting components

Any parts and subassemblies that are in the active assembly can be added to a systems library document. When adding a subassembly, the entire subassembly must be added. You cannot select individual parts in the subassembly. You can select the parts you want to capture in the assembly window or in PathFinder. If you select an assembly pattern, the parts that were used to define the pattern are automatically captured.

The parts and subassemblies you select are listed in the Selected Components dialog box. When you have selected all the parts and subassemblies you want in the new systems library member, click the Accept button on the command bar to proceed to Captures Features Step. The relationships used to position the parts and subassemblies are automatically captured.

Capturing features

You can only capture features that were created using inter-part associativity techniques. If one of the parts you selected in the Select Components Step was used as a parent to create an associative feature on another part, the associative child feature on that other part is available for use in the systems library member. For example, if the hole feature (A) in the mounting plate was constructed using the Include command to associatively include edges (B) (C) from the bracket part, the hole feature (A) can be part of the systems library document.

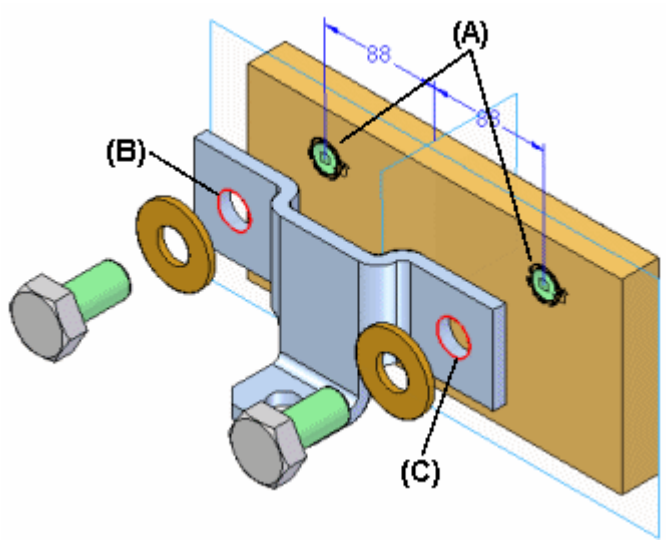

Note

For more information on inter-part associativity, see the Inter-Part Associativity Help topic.

In the previous example, the system library member will then consist of the bracket part (A), the bolts and washers (B) (C), and the hole feature (D). When you place the systems library document later, the plate part itself is not placed.

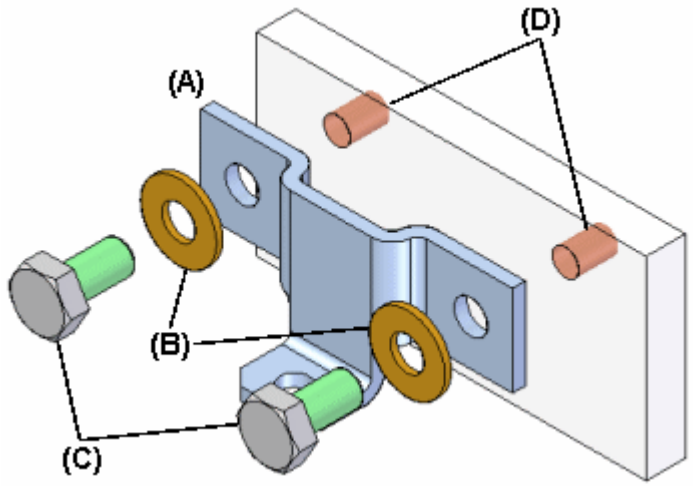

When you select parts that have been used as parents in an associative inter-part feature, the child features that are available for including in the new systems library

document are listed in the Captured Features dialog box and are highlighted in the assembly window so you can select only the features you want to capture.

You can also capture any treatment features that modified the associative inter-part feature. For example, if you added chamfers to the holes described earlier, you can add them to the captured features list by selecting the chamfer feature in the assembly window.

After you have selected the features you want to capture, click the Accept button on the command bar. If you do not want to capture features for the new systems library document, you can click the Next button on the command bar to bypass this step.

Capturing relationships

When you finish defining the parts and features you want to capture, the Capture Relationships dialog box is displayed so you can review the parts, features, and positioning relationships you captured. You can click the relationships listed on the Capture Relationships dialog box to highlight the faces used to define the relationship you selected, or you can click the OK button on the dialog box to dismiss it.

Defining the Systems Library container document

When you click the Create Group button on the command bar, the Create Systems Library dialog box is displayed so you can define the systems library document name and location, the assembly template you want to use, and rename any features you captured.

If you are going to share systems library documents with other users at your company, you should define file naming and location conventions to make it easier to use systems library documents.

Placing a Systems Library member document

You place a systems library member document by dragging the assembly document for the systems library member from the Parts Library page in PathFinder, and dropping it into the assembly window. When you drop the systems document in the assembly window, a command bar and the Input dialog box are displayed to guide you through the steps required to place the systems document:

- Positioning the parts
- Positioning the features

The parts that comprise the systems library document are also temporarily positioned in the assembly window.

The Input dialog box lists the assembly relationships required to position the systems library components. When placing the component parts and captured features, options are provided on the command bar to skip captured relationships or features. As you complete the steps required to define a relationship, the Input dialog box is updated to indicate the steps you have completed.

Positioning parts

You position the parts similarly to the way you would normally position a part in an assembly, by selecting a part already in the assembly, and a face or element on that part to define the relationship. If the Use Reduced Steps When Positioning Parts option is set, then you will only need to select a face or element on an assembly part to define the relationship.

When you drop the systems library member into the assembly, the face on the placement part for the first positioning relationship is highlighted (A). You can then select the target face in the assembly to satisfy the first relationship (B). The Input dialog box displays the relationship type and default value for each relationship. You can also use the command bar to define a new offset value for the first relationship, or skip defining the relationship entirely.

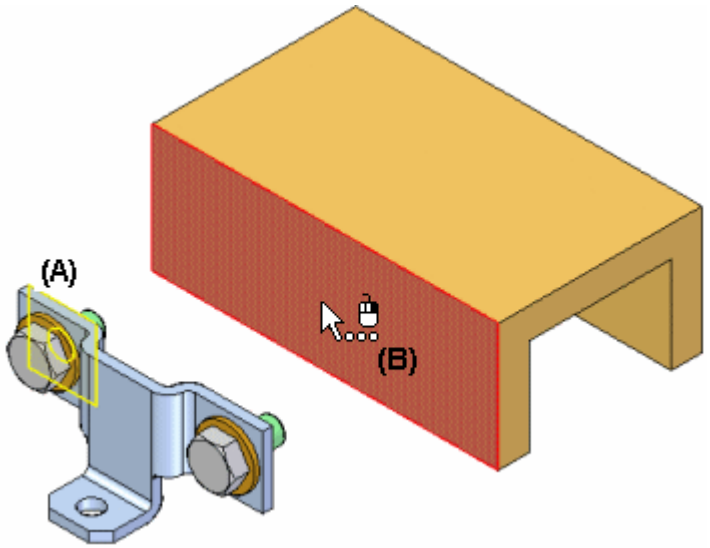

After you select the target face for the first relationship, the set of parts is repositioned, and the face on the placement part for the second positioning relationship is highlighted (A). You can then select the target face in the assembly to satisfy the second relationship (B).

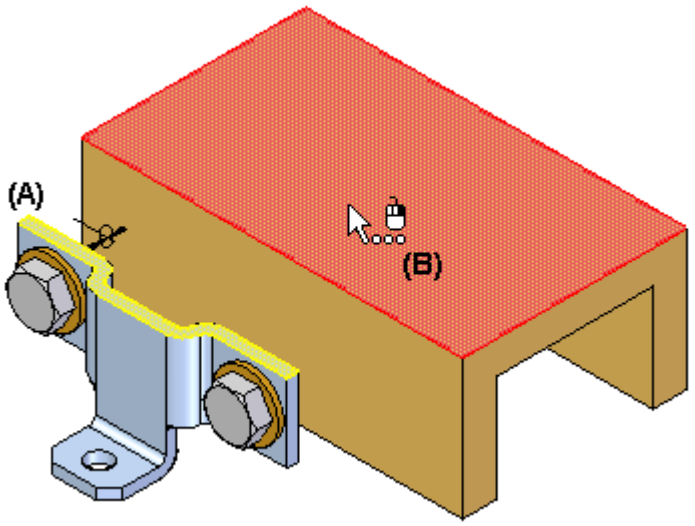

You continue in this fashion until all the positioning relationships have been defined or skipped.

Positioning features

After you define the assembly relationships, you specify the part that you want to modify with the captured features. For example, if the feature you are placing is a hole feature, you would select a planar face on the assembly part (A) on which you want to apply the hole feature. The hole feature is associatively linked as a child of the parent part used to define the feature. In this example, the parent part is the bracket part (B).

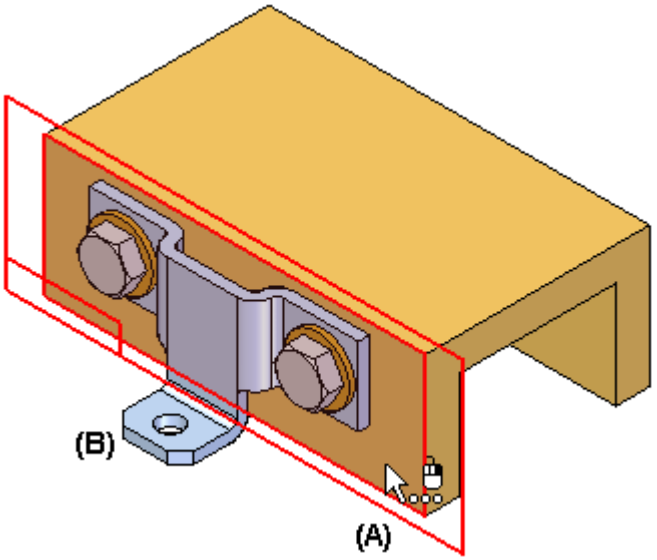

After placement, the parts behave exactly the same as any part in an assembly. The systems library document itself is not placed into the assembly. It is used as a container that defines the systems components.

Reviewing inter-part relationships

The inter-part relationships that you use when creating a systems library member, and when you placing a systems library member are indicated in PathFinder, and can be further reviewed using the Inter-Part Manager dialog box.

For example, a symbol is added to the child part (A) in PathFinder to indicate that it is associatively linked to another part in the assembly.

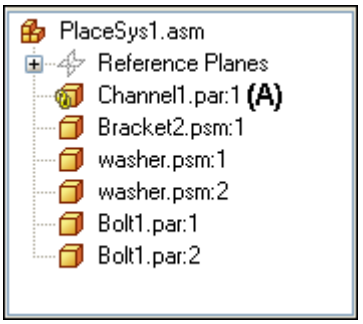

Lesson

3 *Activity – Systems library*

The objective of this activity is to teach the fundamentals of creating a systems library and then placing the library into an assembly so that the parts and features associated with that library are correctly positioned.

When you complete this activity, you will know how to use systems libraries to quickly create components and features, which can be used in many other assemblies. You will learn procedures used during systems library creation that make placement of system libraries easy and consistent.

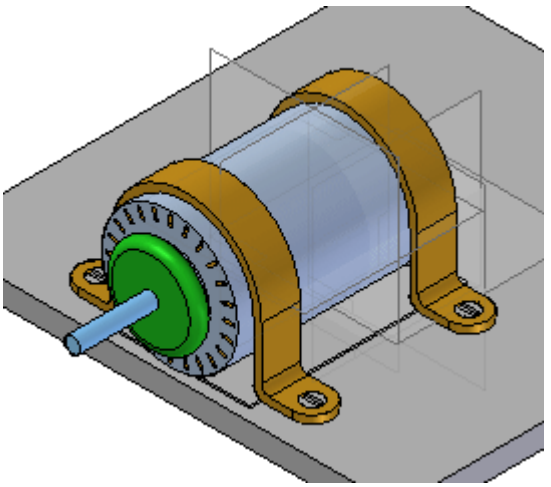

Turn to **Appendix A** for the activity.

A Activity – Systems library

In this activity you will create an assembly called a systems library that consists not only of parts, but underlying features needed to modify target geometry as the assembly is placed.

Place the motor on the plate

The motor is first placed on the plate. Parts and features that need to accompany the motor in a systems library will be created on this plate.

The systems library consists of a group of parts and features which are meant to be placed many times. First you will assembly the components of the systems library in the manner you later wish them to be placed. Once the components are correctly positioned, then you will define them as a systems library.

Note

In creating a system library, it is important to establish as many relationships as possible between components that are going to be a part of the systems library. Relationships to other parts will need to be reestablished upon placement, so whenever possible establish relationships with components within the group to speed placement. Establish as many relationships as you can to the first part which is placed.

- Open *Create_Sys_Lib.asm* with all the parts activated.

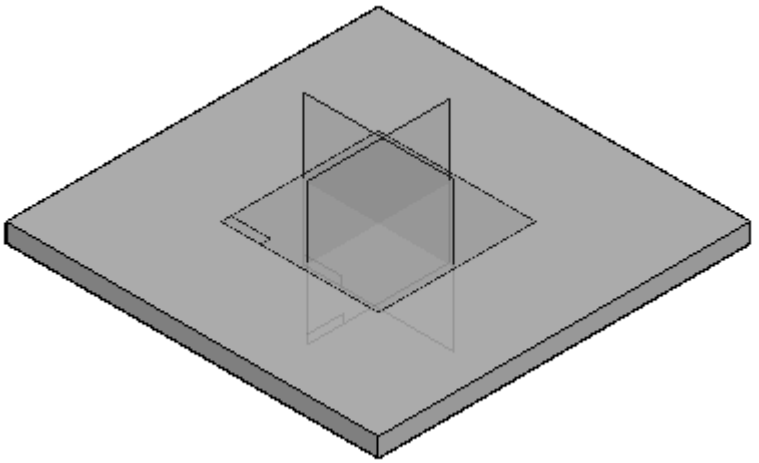

- The right (yz) plane of the part *base_plate.par* will be used to position the motor on the plate. The assembly reference planes can be turned off.

- Hide the assembly reference planes.

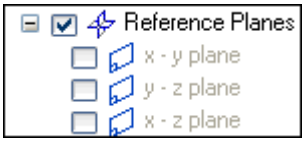

- Turn on the reference planes for the part file*base_plate.par*. Later, these will be used to position the motor. In pathfinder, right click *base_plate.par* and then click Show/Hide Components® Reference Planes.

- From the parts library, drag *motor.par* into the assembly. Position the part using the following steps.

- Click options on the command bar and set the options as shown.

Note

Even though the FlashFit option is set, choose the appropriate relationship and leave the default as FlashFit.

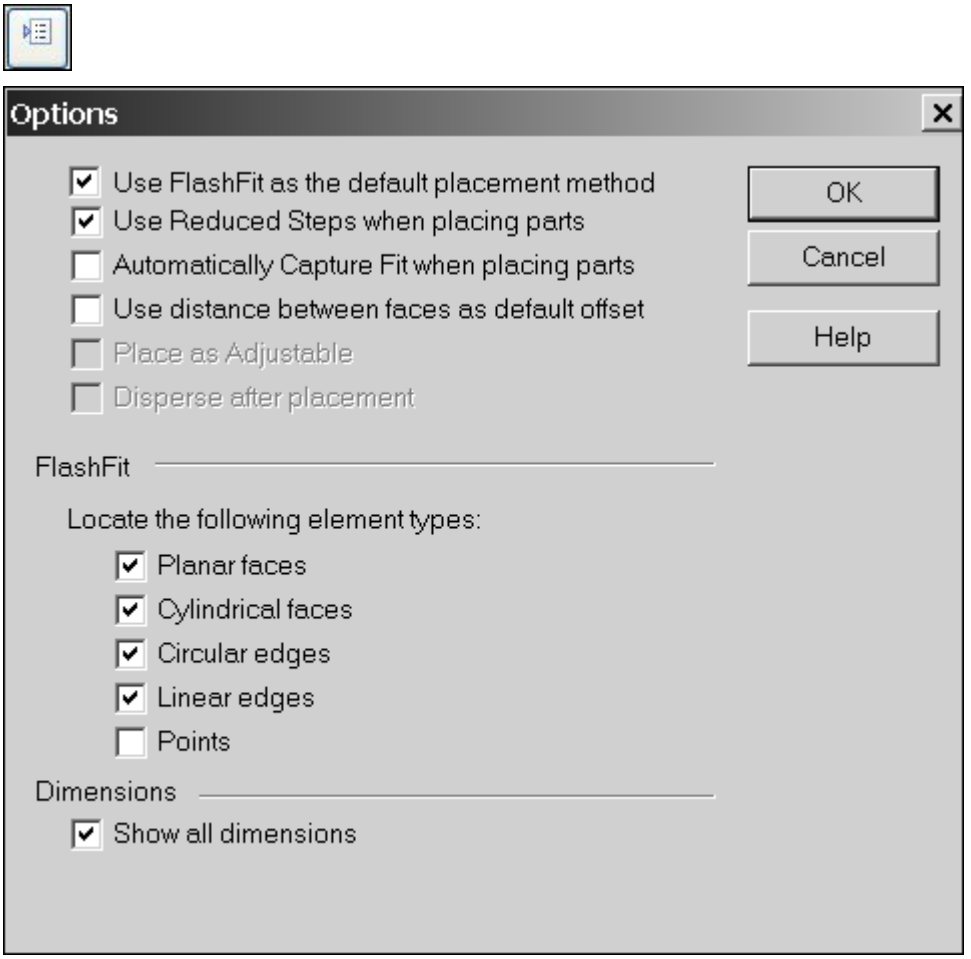

- Select the mate relationship, and mate the plane of the foot of *motor.par* to the top plane of *base_plate.par*.

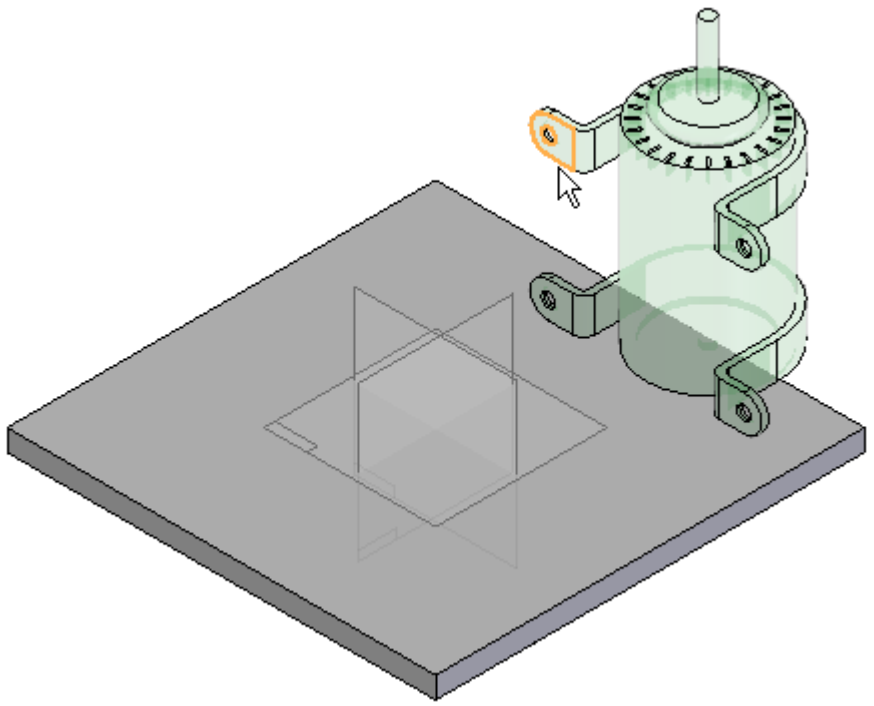

- Select the planar align relationship, and align the front face of the motor bracket on *motor.par* with the vertical face of *base_plate.par*. Set the fixed offset to 15 mm.

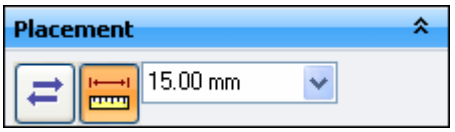

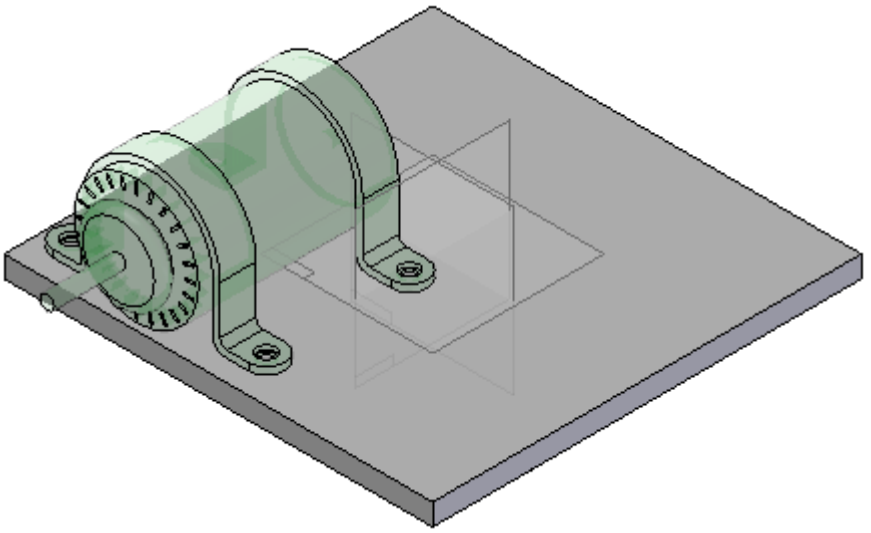

- Planar align the reference plane of *motor.par* to the reference plane of *base_plate.par*. Access the reference planes for the motor by turning on the construction display for reference planes as shown.

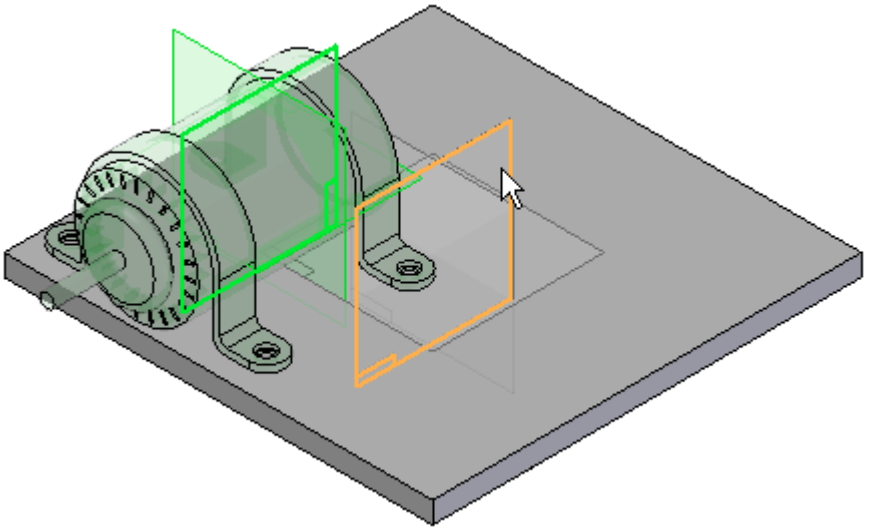

The motor is now centered on the base plate.

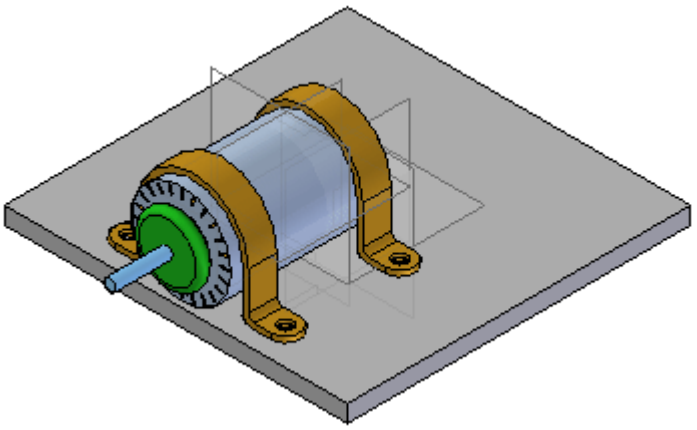

Use Inter-part to associate the holes in the motor to the holes in the plate

Next, add holes to the base plate. Use Inter-Part to associate the holes to the corresponding geometry on the motor.

- Click the application button.

- Click Solid Edge Options.

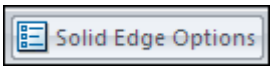

- Click the interpart tab and set the options as shown. Then click ok.

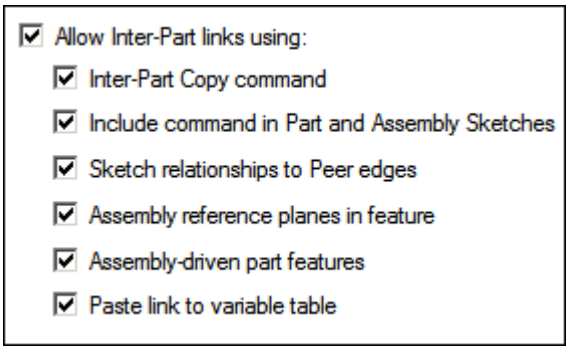

- In Assembly PathFinder, right-click *base_plate.par* and then click Edit.

  Note

  When editing a part in the context of an assembly the viewing of the rest of the assembly can be turned on or off. The command that does this is hide previous level. For the upcoming steps the rest of the assembly should not be hidden.

- If you cannot see the motor, click the view tab. In the show group, turn off hide previous level. This is a toggle.

- On the Home tab in the clipboard group, click insert® inter-part copy.

- Select *motor.par* as the assembly part to copy from. Select the bottom plane of each foot as the faces to copy.

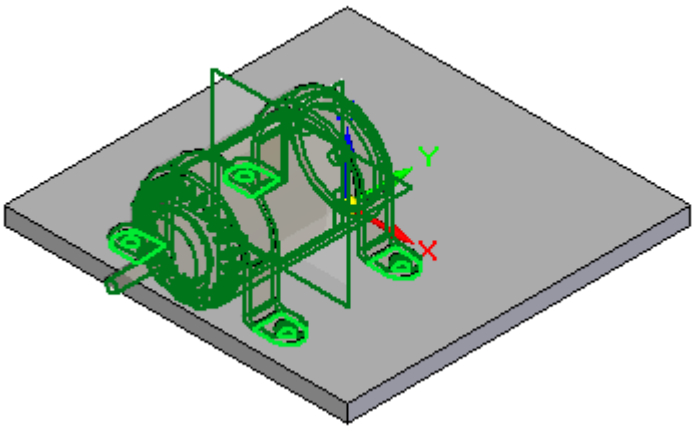

- Click the accept button and then finish to place the inter-part copy.

Create holes in the plate from the Inter-Part copy

Place features in the plate. These features will become part of the systems library and will be placed as features in the target part at the time of placement.

- On the view tab in the show group, click hide previous level to turn off the display of *motor.par*.

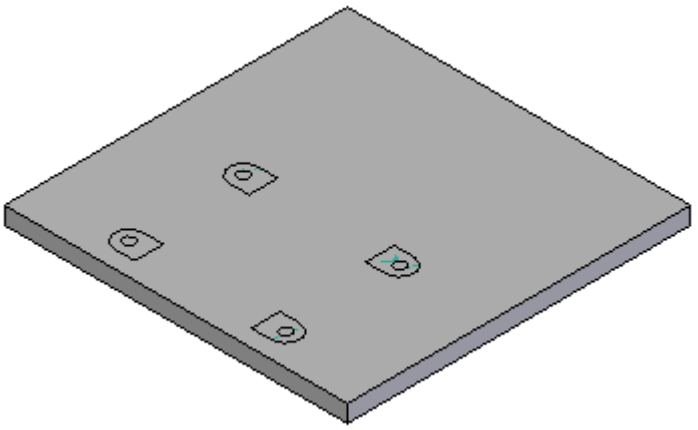

- On the home tab in the solids group, click the hole command.

- Click Hole Options and set the values as shown, then click OK.

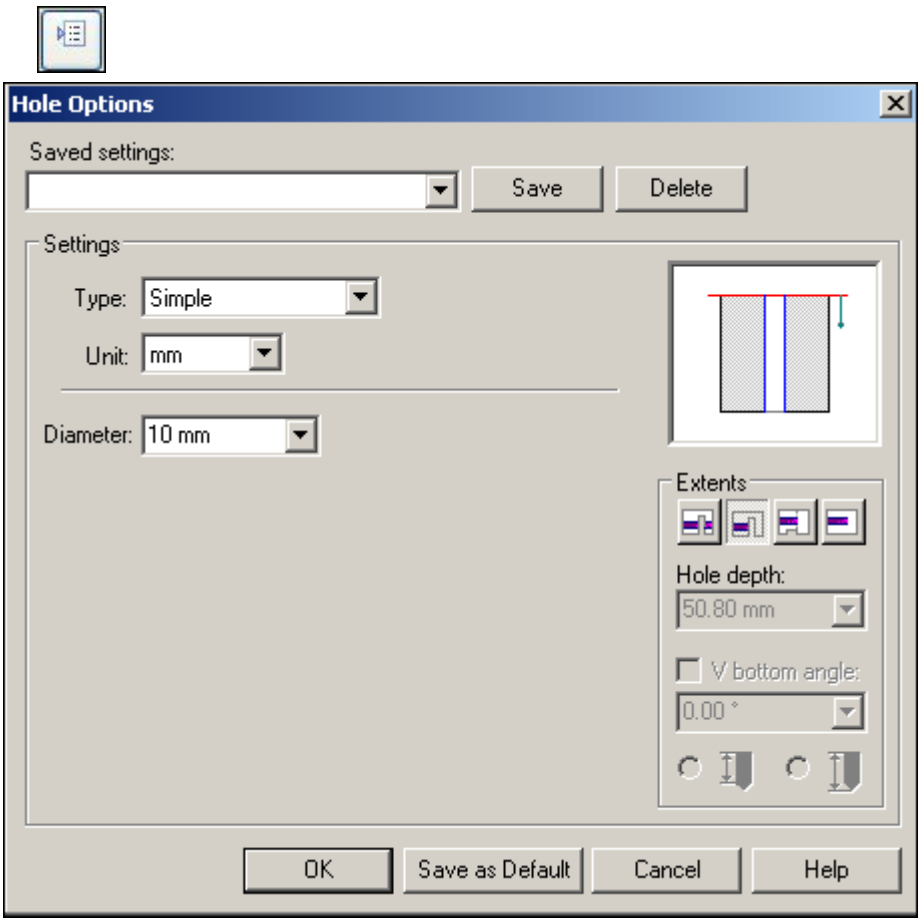

- Select the reference plane shown in the image. Use the N key on the keyboard to orient the reference plane as shown.

  Note

  When creating features for a systems library, it is good practice to orient the reference plane consistently for all the features.

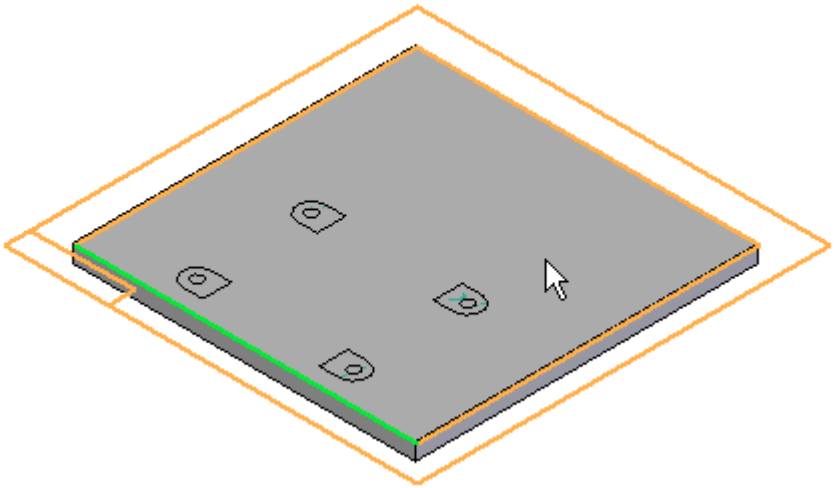

- Place four thru holes using the center of the inter-part surfaces to place the holes.

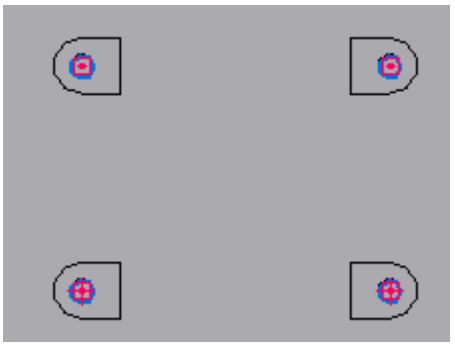

- On the home tab in the close group, click close sketch.

- Click with the arrow in the direction shown to define the direction of the hole extent.

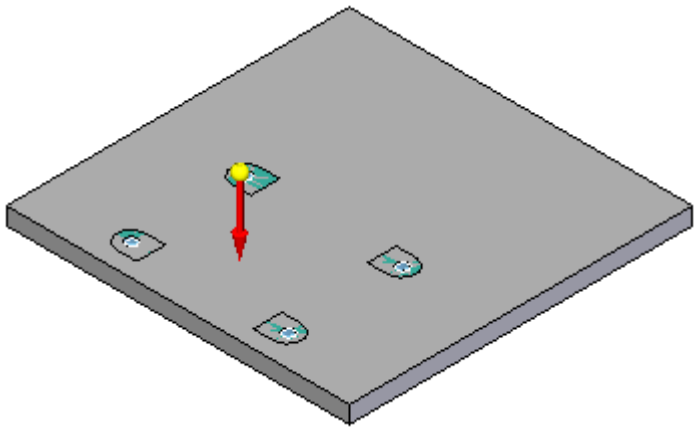

- In the command bar, click finish.

Create the pocket on the plate

- Click the cut command.

- The reference plane is created from the top face of the plate. Use the N key to orient the reference plane as shown.

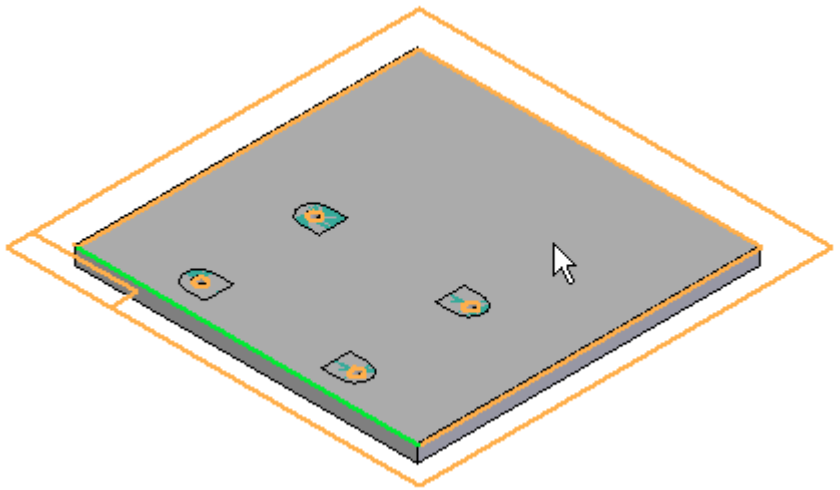

- Click the Include command and set the options as shown, then click OK.

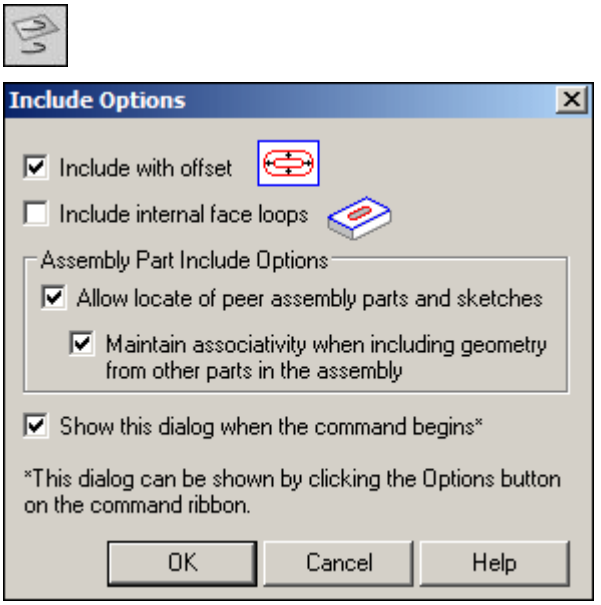

- As shown below, offset the bold lines a distance of 5 mm from the inter-part construction surfaces.

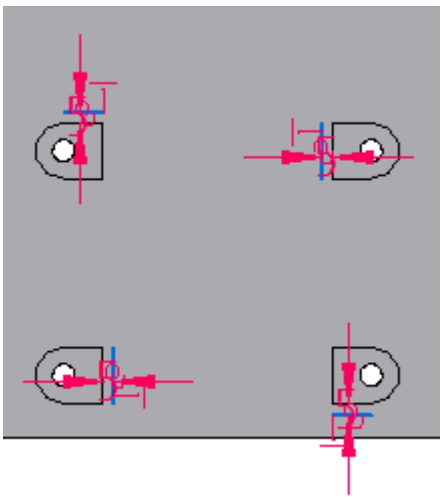

- Click trim, and trim the 4 offset lines as shown.

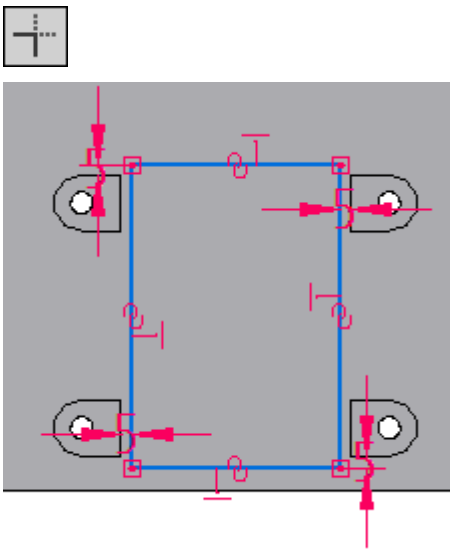

- Click close sketch and in the command bar, enter 7.5 mm for the extent of the cutout.

- Click to define the direction of the cutout as into the part. Click finish to complete the cutout.

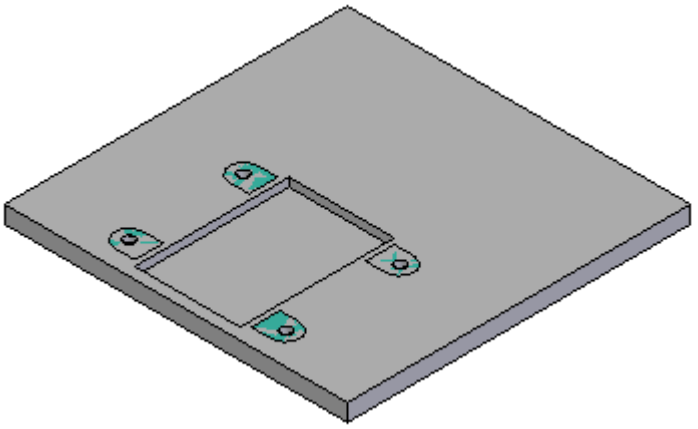

- Click the round command. Select the top edges of the cutout, and enter a radius of 2.5 mm. Preview and finish the round.

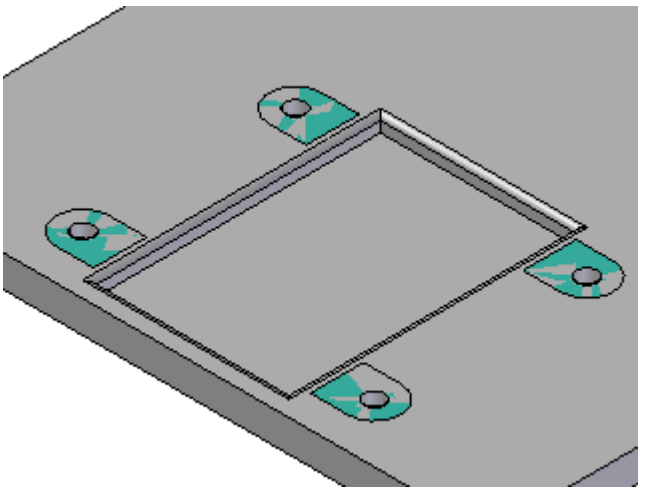

- Click close and return to return to the assembly.

Place the first fastener

- Drag *10mm_cs_screw.par* into the assembly.
- Using FlashFit, select the circular edge of the screw, and then select the circular edge of the hole in the foot of the motor as shown.

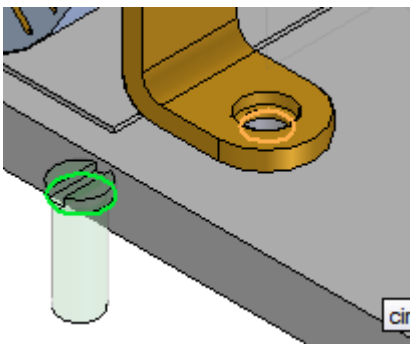

- The screw is placed.

- Drag *10mm_nut.par* into the assembly.

Note

It is good design practice when creating a systems library to position subsequent parts relative to a single part that will be included in the systems library. In this case, the plate will not be a part of the systems library, but the features on the plate will be. Because all the features need to be placed relative to the motor, the motor will be used to establish as many relationships to as possible.

- To establish relationship 1, axial align the cylindrical face of *10mm_nut.par* with the cylindrical face of the hole in *motor.par*.

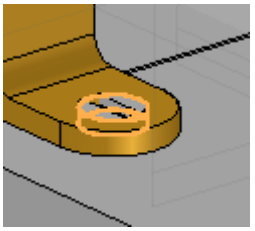

- Mate the top face of the hex face of *10mm_nut.par* to the bottom face of *base_plate.par*.

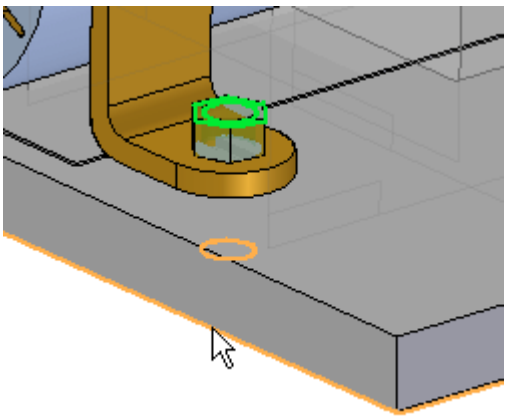

- Click the select tool to exit the Place Part command. Select *10mm_nut.par* in Assembly PathFinder, and in the lower plane, click the axial align relationship.

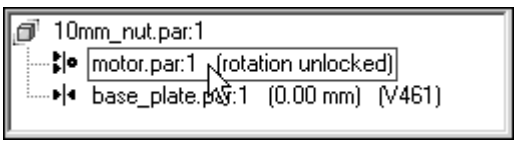

- Lock the rotation.

The nut is positioned.

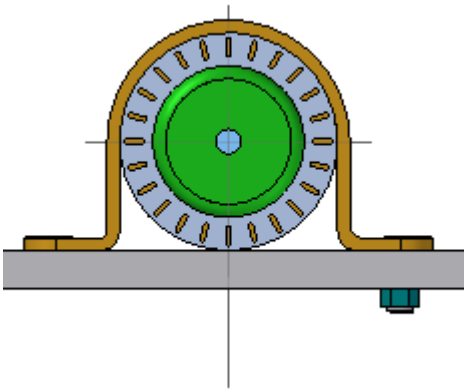

Pattern the fasteners

The pattern in *motor.par* will be used to pattern the fasteners.

- Click the pattern command.

- In Assembly PathFinder, select *10mm_cs_screw.par* and *10mm_nut.par* to be included in the pattern, then click the accept button.
- When prompted to select the part that contains the pattern, select the motor.
- Select the pattern shown.

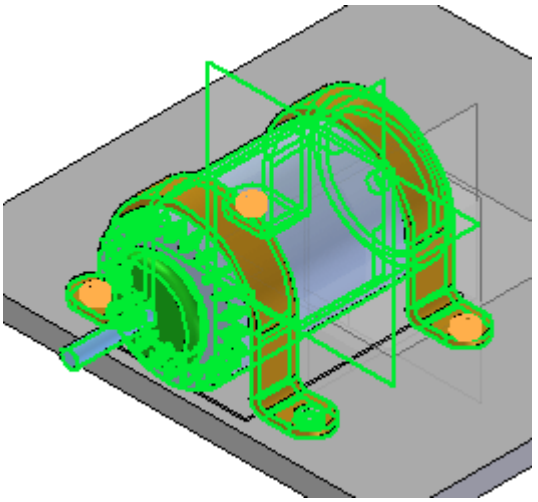

- Select the reference feature shown, then click finish to place the pattern.

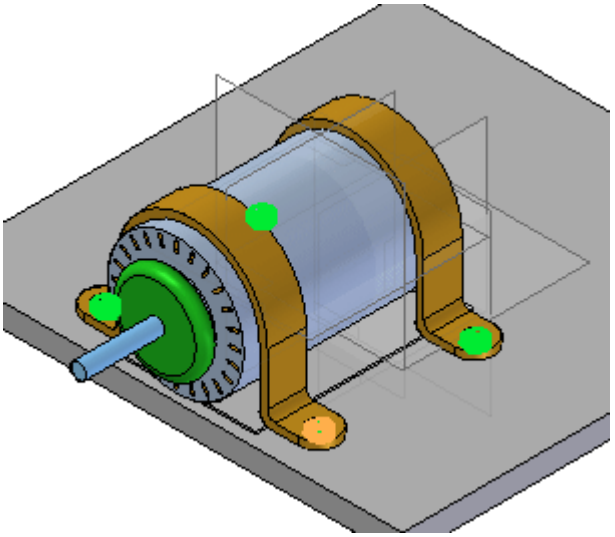

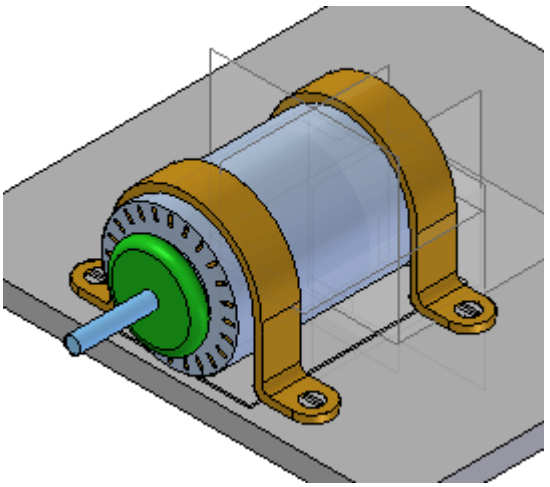

Create the systems library

All the components of the systems library are in place and can now be stored. Create the systems library.

- In the assemble group on the home tab, click the create systems library command.

- In the Assembly PathFinder, select all parts except *base_plate.par*.

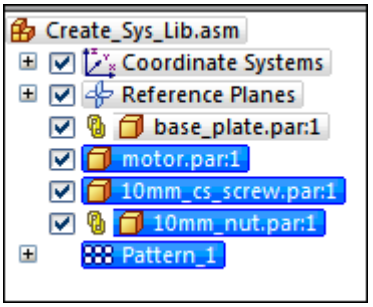

- The dialog box showing the set of parts to be added to the systems library is displayed.

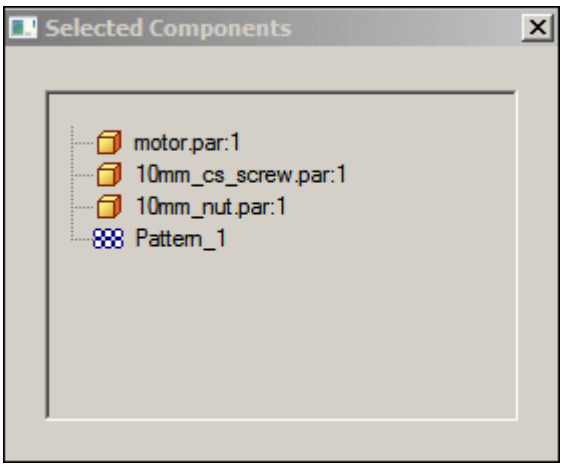

- Click the next in the command bar.

- The dialog box showing which features to be included in the systems library is displayed.

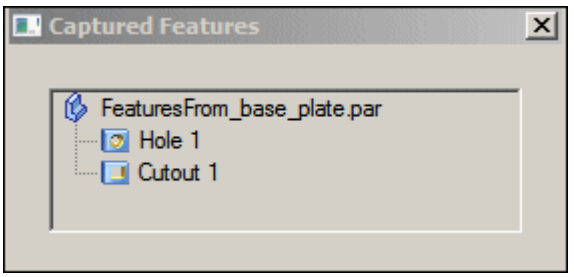

- Add the round feature to the selection set, by clicking on the feature in the assembly window.

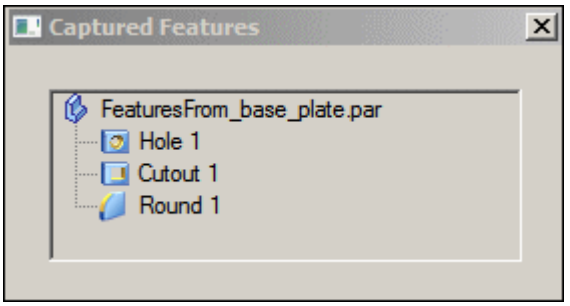

- Click next in the command bar.
- The dialog box showing the Captured Relationships is displayed. Click ok.

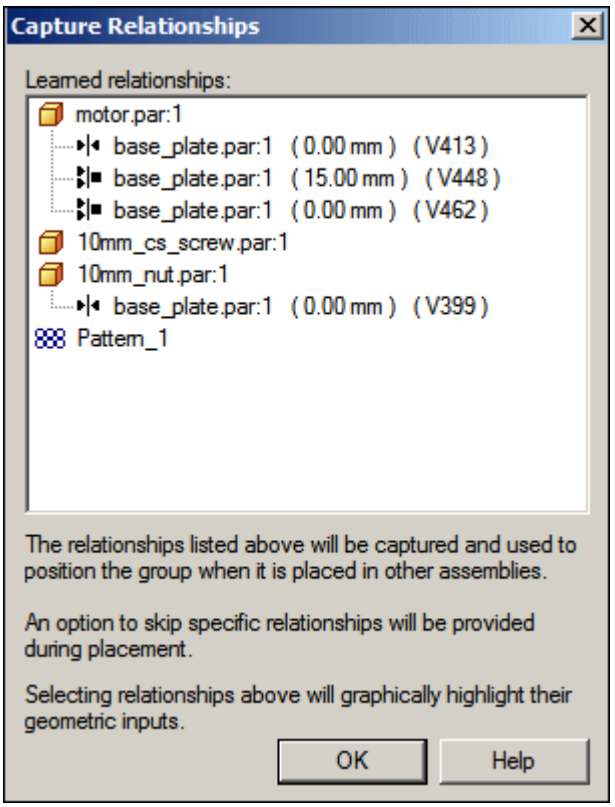

- Click create group.

- The new systems library will be called *motor_assembly.asm*. Fill in the appropriate fields in the dialog box. Make sure the new file location is the folder containing the lab files for this activity.

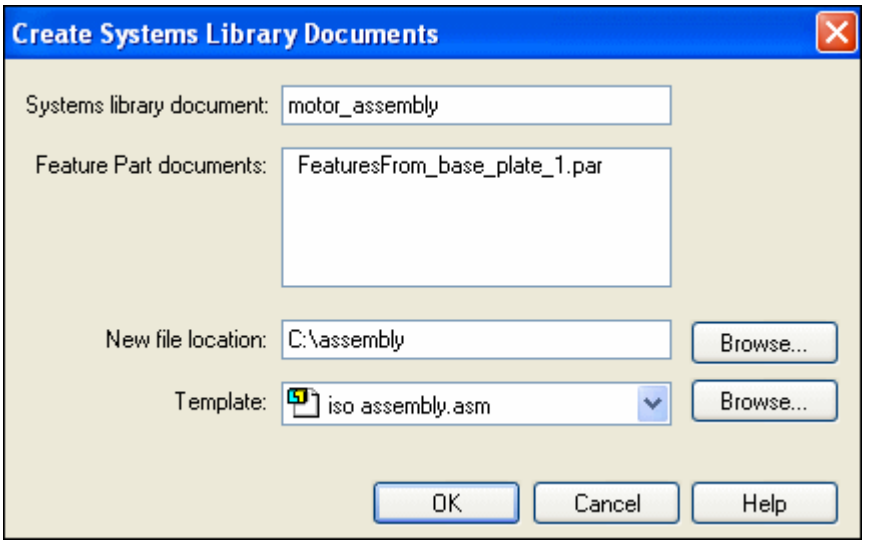

- Click ok.
- The systems library is now created. Save and close the assembly.

Place the systems library into an assembly

To place the systems library, you will create a new assembly with a plate. You will place four occurrences of the system library on the plate.

Note

During creation of the systems library, care and consideration was given in orienting the reference planes consistently for each feature, and as many relationships as possible were established to *motor.par*. This makes accurate placement easier.

- Create a new assembly file. Save the assembly file as *newplate.asm*.
- Drag *newplate.par* into the assembly window.
- Hide the assembly reference planes.
- Right click *newplate.par* and click Show/Hide Component® Reference Planes. These will be used to position the systems library on the plate.
- Drag *motor_assembly.asm* into the assembly window.

- The first relationship to be established is the mate between the foot of the motor and the top face of the plate. Select the top face of *newplate.par*

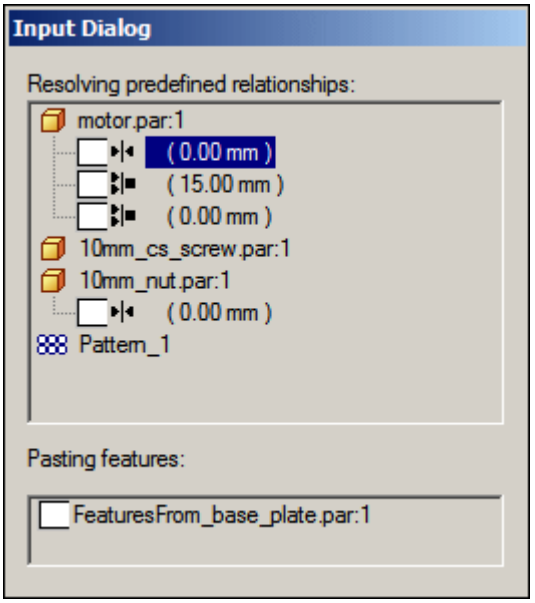

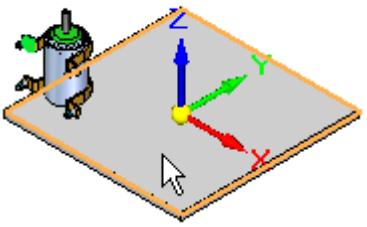

- Establish the planar align relationship with the 15 mm offset. Click the front face of *newplate.par*.

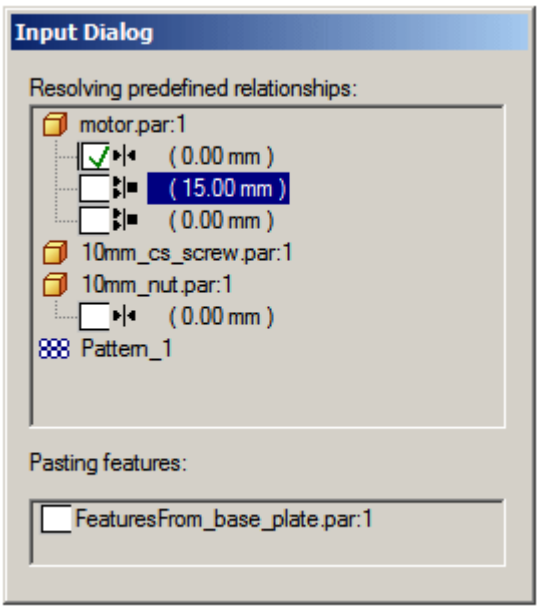

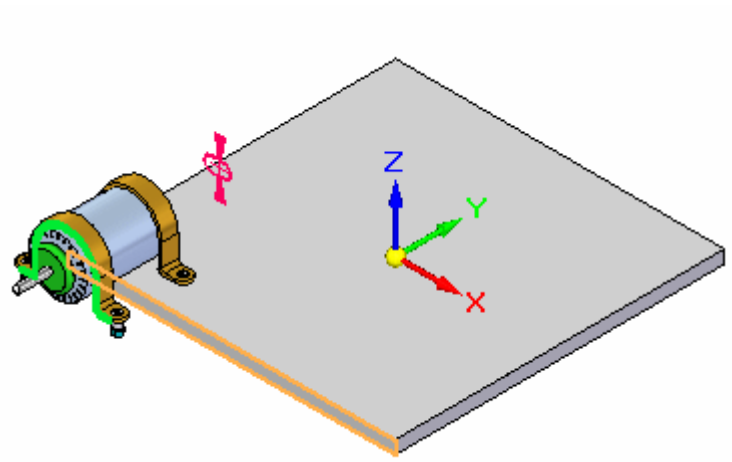

- Now the Mate relationship between the reference plane of the motor and the reference plane of the plate is to be established. Click the reference plane shown.

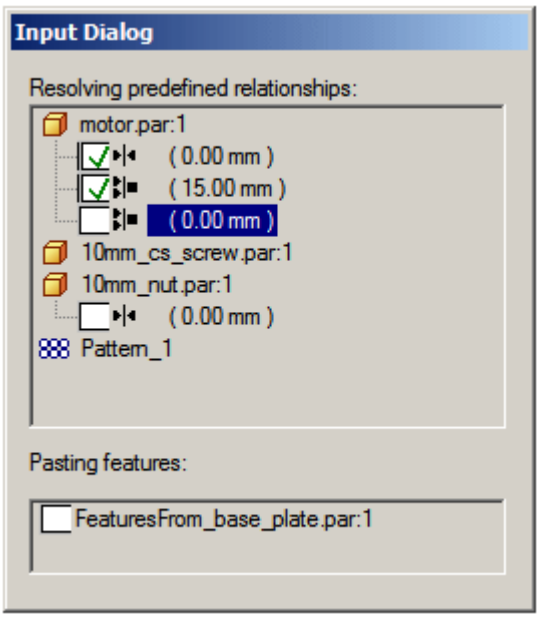

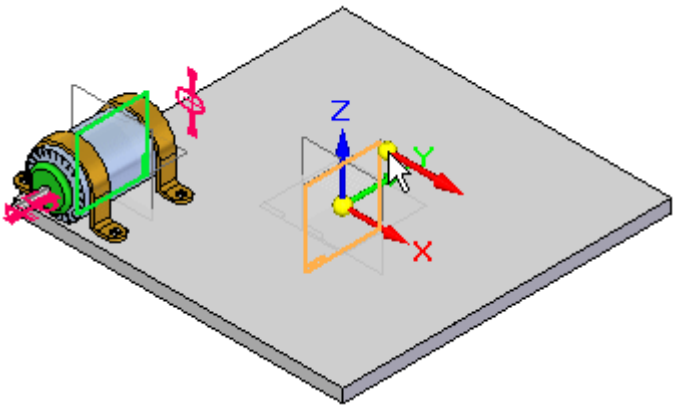

- Place the *10mm_nut.par*. Establish the Mate relationship with the bottom plane of the plate.

  Note

  Notice that no action is required to place the screws. This is because all the relationships needed to position the screws were established relative to the motor.

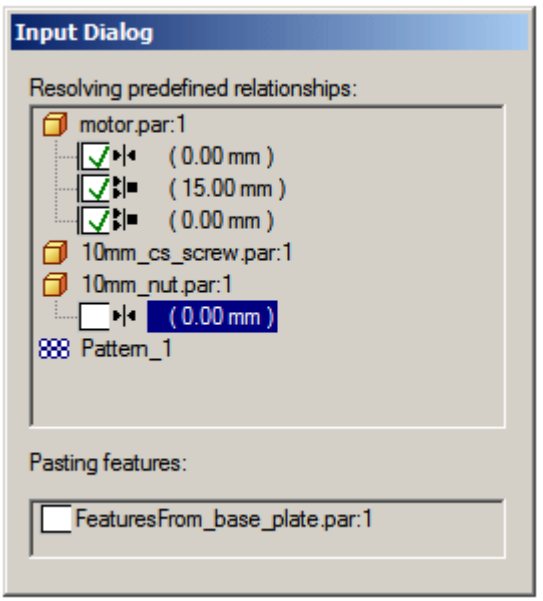

- Click the bottom face of *newplate.par*.

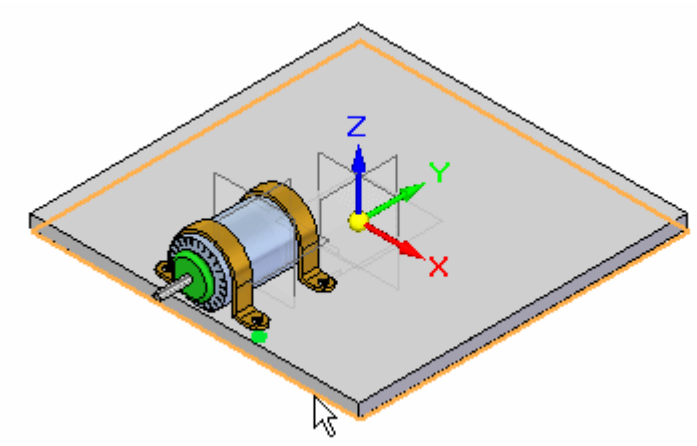

- Place the Cutout feature and the Round on the plate.

Note

The orientation of the reference plane selected to place the features will be consistent with the orientation at the time of their creation.

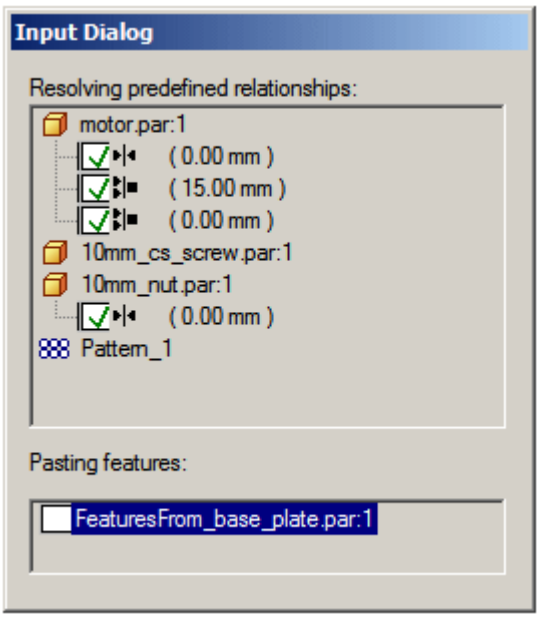

- Position the mouse so that the reference plane associated with the top face of *newplate.par* highlights. If needed, use the N key to orient the reference plane as shown, then click.

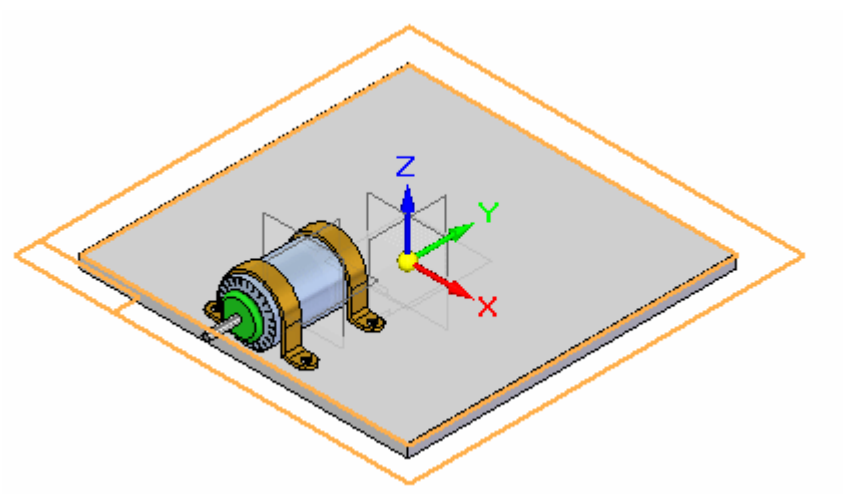

- The systems library has been placed.

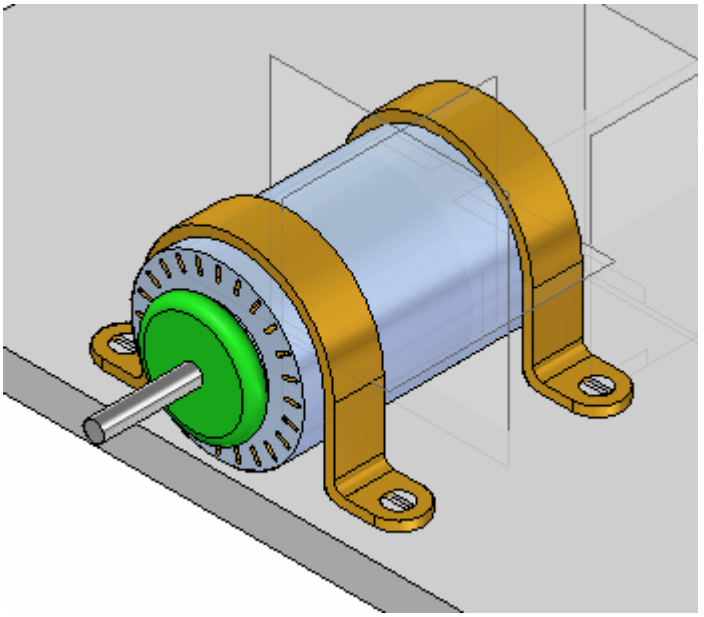

- In Assembly PathFinder, right click *newplate.par* and then click Show Only. You will see the systems library placed holes for the screws as well as the cutout and rounds under the motor.

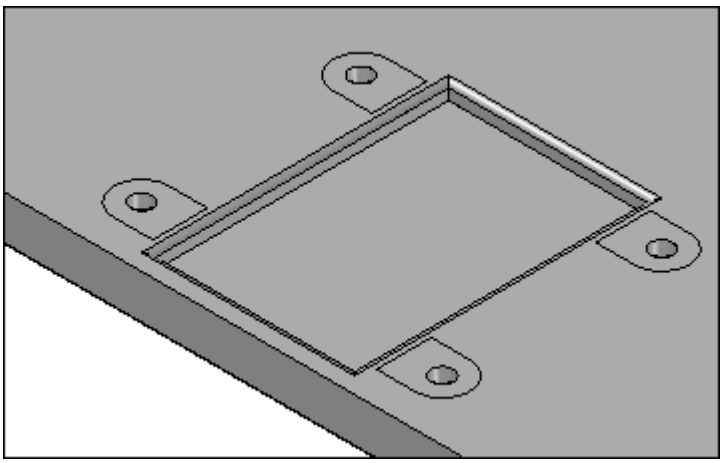

- Save, but do not close, this assembly as *newplate.asm*.

- In Assembly PathFinder, right-click the *newplate.asm* and then click Show All.

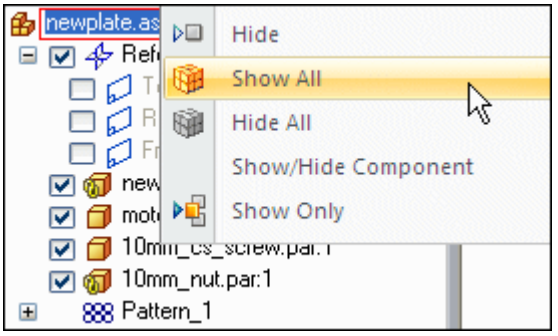

Place more occurrences of the system library

- Repeat the placement of *motor_assembly.asm* on the other 3 sides of *newplate.par* as shown. Remember to orient the reference plane correctly when placing the features.

- This completes the activity.

Activity summary

In this activity you learned how to place components into an assembly and define them as a systems library. Relationships were, when possible, established to the first part in the features library. Care was taken in creating profile based features such that the reference plane was oriented consistently for each feature. When the systems library was placed, the reference plane orientation for placement was consistent with the orientation used to create the feature.