Replacing parts in an assembly

Publication Number
spse01665

Replacing parts in an assembly

Publication Number
spse01665

Proprietary and restricted rights notice

This software and related documentation are proprietary to Siemens Product Lifecycle Management Software Inc.

© 2010 Siemens Product Lifecycle Management Software Inc. All Rights Reserved.

All trademarks belong to their respective holders.

SOLID EDGE
VELOCITY SERIES

...with Synchronous Technology

Contents

Introduction **1-1**

Replacing parts in an assembly **2-1**

Replacing parts in assemblies 2-2
Activity: Replacing parts in an assembly 2-5

Activity: Replacing parts in an assembly **A-1**

Open an existing assembly with all the parts active A-2
Replacing the subassembly A-3
Summary A-4

Lesson

1 *Introduction*

Welcome to self paced training for Solid Edge. This course is designed to educate you in the use of Solid Edge. The course is self-paced and contains instruction followed by activities.

Solid Edge self-paced courses

- **spse01510**—Sketching
- **spse01515**—Constructing base features
- **spse01520**—Moving and rotating faces
- **spse01525**—Working with face relationships
- **spse01530**—Constructing treatment features
- **spse01535**—Constructing procedural features
- **spse01536**—Modeling synchronous and ordered features
- **spse01540**—Modeling assemblies
- **spse01541**—Explode-Render-Animate
- **spse01545**—Creating detailed drawings
- **spse01546**—Sheet metal design
- **spse01550**—Practicing your skills with projects
- **spse01560**—Modeling a Part Using Surfaces
- **spse01610**—Solid Edge frame design
- **spse01640**—Assembly patterning
- **spse01645**—Assembly systems libraries
- **spse01650**—Working with large assemblies
- **spse01655**—Revising assemblies
- **spse01660**—Assembly reports
- **spse01665**—Replacing parts in an assembly

- **spse01670**—Designing in the context of an assembly
- **spse01675**—Assembly features
- **spse01680**—Inspecting assemblies
- **spse01685**—Alternate assemblies
- **spse01690**—Virtual components in assemblies
- **spse01695**—XpresRoute (tubing)
- **spse01696**—Creating a Wire Harness with Harness Design
- **spse01424**—Working with Solid Edge Embedded Client

Start with the tutorials

Self-paced training begins where tutorials end. Tutorials are the quickest way for you to become familiar with the basics of using Solid Edge. If you do not have any experience with Solid Edge, please start by working through the tutorials for basic part modeling and editing before starting this self-paced training.

Lesson

2 *Replacing parts in an assembly*

It is possible to quickly replace a part in an assembly with another part or subassembly that has similar geometry.

Replacing parts in assemblies

At times you may need to replace a part or subassembly in an assembly with a new part or subassembly. For example, a part may be placed in multiple assemblies, and at a later time, the part needs to be redesigned for one assembly only. After creating a new version of the part, you can replace the existing part using the Replace command.

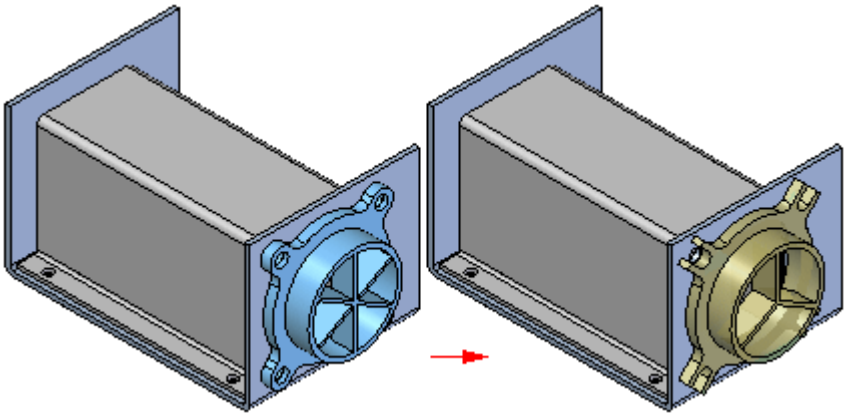

Replacing similar parts

When you replace a part with a new version of the same part, Solid Edge attempts to use the existing assembly relationships to position the new version. However, if any faces used to position the old part were consumed when the part was modified; assembly relationships can fail. If this occurs, you can delete the affected assembly relationships using PathFinder, and then apply new relationships to completely position the new part.

You can also use a member of a family of parts as a replacement part. If the current part is not a family of parts member, and you want to replace it with a family of parts member, use the Replacement Part dialog box to select a family of parts member as the replacement part.

If the current part is a member of a family of parts, the Family of Parts Member dialog box is automatically displayed when you select the part you want to replace. You can then specify another family member you want to use as the replacement part. If you want to replace the family of parts member with any other part, click the Browse button on the Family of Parts Member dialog box to display the Replacement Part dialog box. This allows you to select any part as the replacement part.

Replacing dissimilar parts

When you replace a part with a different part, one that was created independently of the part being replaced, Solid Edge compares the geometry of the two parts. If the geometry matches sufficiently, the replacement part is positioned properly.

When replacing dissimilar parts, the original part and the replacement part are required to be in the same relative orientation in their respective part files.

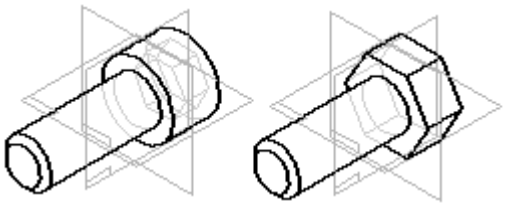

Replacing one occurrence of a part

If the part you are replacing has been placed more than once in the active assembly, you can specify whether to replace all occurrences of the part, or only the selected one.

Replacing parts in subassemblies

The Replace command can be used to replace parts in the active assembly only. If the part you want to replace is in a subassembly, you will have to in-place activate the subassembly before replacing the part.

Replacing subassemblies

When you replace a subassembly, you can replace it with another subassembly or you can replace it with a part. If the current or replacement subassembly is also a family of assemblies, you can use the Assembly Member dialog box to specify which family member you want to use as the replacement.

Note

For more information on working with families of assemblies, see the Family of Assemblies and Alternate Position Assemblies topic in online Help.

Failed relationships during part replacement

Assembly relationships can fail when you are replacing parts. Normally, this happens because the assembly cannot locate the faces in the new part that it was connected to in the old part. When this occurs, a symbol displays to the left of the failed relationship in the lower pane of the PathFinder.

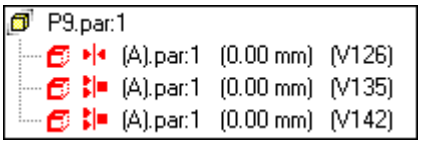

Replacing renamed occurrences

When you replace an assembly occurrence whose default name in PathFinder has been overridden using the Rename or Occurrence Properties commands on the

PathFinder shortcut menu, you can control whether the replacement occurrence uses the new document name or the overridden name in PathFinder.

When you set the Use Default Placement Name During Replace Part option on the Assembly tab on the Options dialog box, the document name of the replacement occurrence is used. When you clear this option, the overridden name is maintained.

When you override the name of an assembly occurrence, the actual document name is not changed.

Activity: Replacing parts in an assembly

Overview

The objective of this activity is to show how to replace a part or subassembly in an assembly.

Activity

In this activity you will replace a subassembly with a similar subassembly inside of the top level assembly.

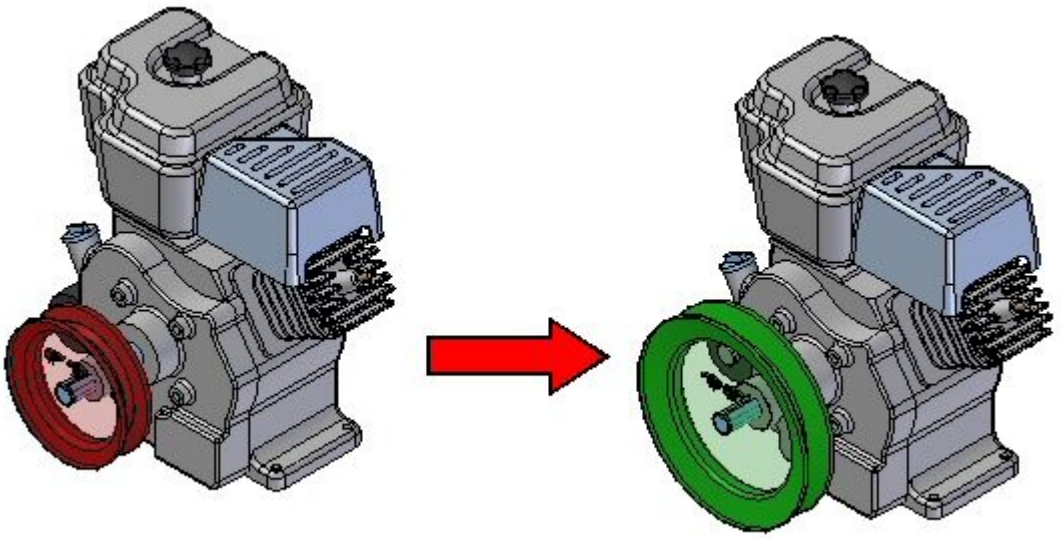

Turn to **Appendix A** for the activity.

A Activity: Replacing parts in an assembly

Overview

This activity demonstrates how to replace a part in an assembly.

Objectives

You will replace a subassembly in an assembly.

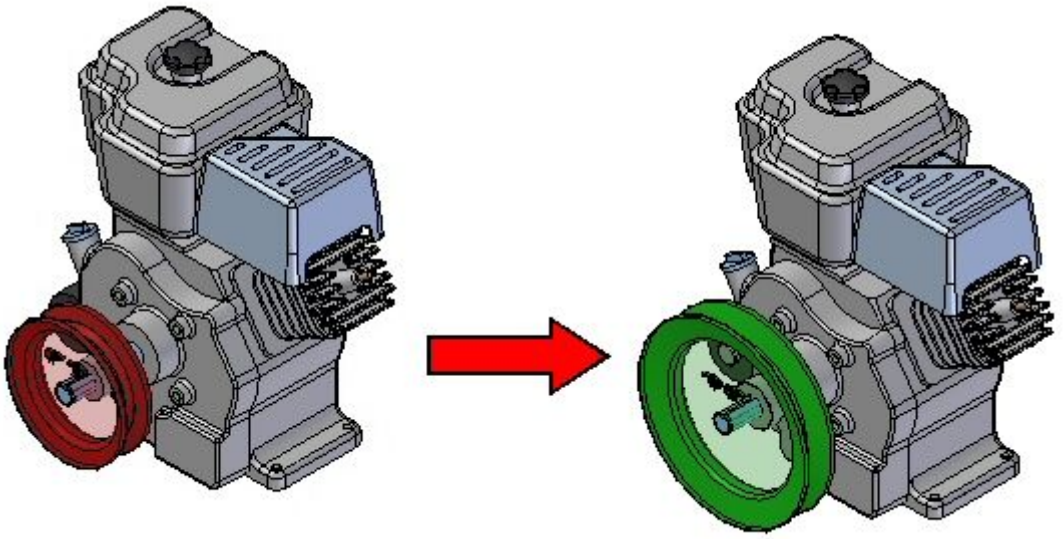

Open an existing assembly with all the parts active

The assembly you will open has a small pulley subassembly that you will replace with a large pulley subassembly.

- From the Solid Edge start screen, click Open Existing Document. Browse for *Engine.asm* in the folder where the activity files are located.

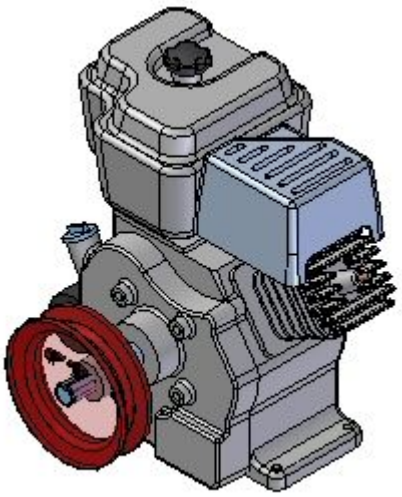

Replacing the subassembly

The subassembly *small.asm* will be replaced with *large.asm*.

- In the Home tab, in the Modify group, choose the Replace Part command .
- In Pathfinder, select *small.asm* as the subassembly to replace.
- In the replacement part dialog box, browse for the assembly *large.asm* in the folder where the activity files are located, and then click open.

The subassembly has been replaced.

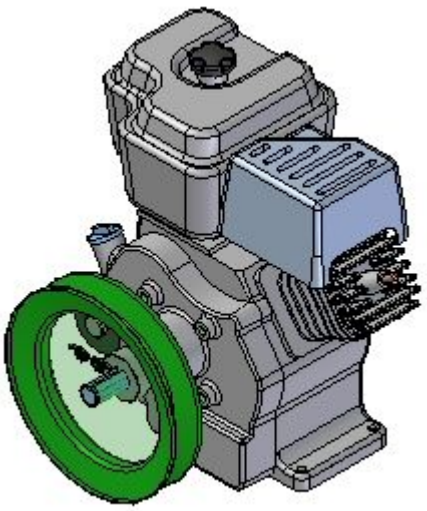

- Save and close the assembly. This completes the activity.

Summary

In this activity you learned how to replace a subassembly within a top level assembly.