Inspecting assemblies

Publication Number
spse01680

Inspecting assemblies

Publication Number
spse01680

Proprietary and restricted rights notice

This software and related documentation are proprietary to Siemens Product Lifecycle Management Software Inc.

© 2010 Siemens Product Lifecycle Management Software Inc. All Rights Reserved.

All trademarks belong to their respective holders.

SOLID EDGE
VELOCITY SERIES

...with Synchronous Technology

Contents

Introduction **1-1**

Inspecting assemblies **2-1**

Introduction 2-2
Objectives 2-3
Physical properties of parts and assemblies 2-4
Activity: Computing mass properties of an assembly 2-8
Analyzing movement and detecting collisions in assemblies 2-9
Distance and area measurement 2-11
Drag Component command 2-15
Activity: Analyzing motion 2-16
Sensors 2-17
Activity: Creating a sensor 2-20
Checking interference on parts 2-21
Activity: Interference checking 2-23

Lesson review **3-1**

Lesson summary **4-1**

Activity: Computing mass properties of an assembly **A-1**

Open the assembly and change the material A-2
Examine the physical properties A-4
Change the material A-7
Activity Summary A-10

Activity: Analyzing motion **B-1**

Open the assembly B-2
Motion environment B-3
Find the initial collision B-6
Activity Summary B-11

Activity: Creating a sensor **C-1**

Open the assembly with all parts active C-2
Reestablish the mate relationship C-3
Create sensor C-4
Test the sensor C-6
Activity Summary C-8

Activity: Interference checking **D-1**

Open the assembly and analyze the interference D-2
Find the interference D-5
Measure the interference D-6

Unlock the handle and reposition D-9
Activity Summary D-13

Lesson

1 *Introduction*

Welcome to self paced training for Solid Edge. This course is designed to educate you in the use of Solid Edge. The course is self-paced and contains instruction followed by activities.

Solid Edge self-paced courses

- **spse01510**—Sketching
- **spse01515**—Constructing base features
- **spse01520**—Moving and rotating faces
- **spse01525**—Working with face relationships
- **spse01530**—Constructing treatment features
- **spse01535**—Constructing procedural features
- **spse01536**—Modeling synchronous and ordered features
- **spse01540**—Modeling assemblies
- **spse01541**—Explode-Render-Animate
- **spse01545**—Creating detailed drawings
- **spse01546**—Sheet metal design
- **spse01550**—Practicing your skills with projects
- **spse01560**—Modeling a Part Using Surfaces
- **spse01610**—Solid Edge frame design
- **spse01640**—Assembly patterning
- **spse01645**—Assembly systems libraries
- **spse01650**—Working with large assemblies
- **spse01655**—Revising assemblies
- **spse01660**—Assembly reports
- **spse01665**—Replacing parts in an assembly

- **spse01670**—Designing in the context of an assembly
- **spse01675**—Assembly features
- **spse01680**—Inspecting assemblies
- **spse01685**—Alternate assemblies
- **spse01690**—Virtual components in assemblies
- **spse01695**—XpresRoute (tubing)
- **spse01696**—Creating a Wire Harness with Harness Design
- **spse01424**—Working with Solid Edge Embedded Client

Start with the tutorials

Self-paced training begins where tutorials end. Tutorials are the quickest way for you to become familiar with the basics of using Solid Edge. If you do not have any experience with Solid Edge, please start by working through the tutorials for basic part modeling and editing before starting this self-paced training.

Lesson

2 *Inspecting assemblies*

Introduction

Solid Edge supports a variety of tools to inspect and analyze assemblies. Covered here are:

- Motion
- Collision detection
- Sensors
- Mass properties

Objectives

After completing this lesson, you should be able to:

- Assign material densities to different parts and calculate a center of mass and weight of an assembly.
- Use motion to analyze and detect collisions in unconstrained parts.
- Establish sensors to warn if an unconstrained part is violating a set parameter as it moves.

Physical properties of parts and assemblies

You can calculate the following physical properties of parts and assemblies:

- Volume
- Mass
- Center of volume
- Center of mass
- Surface area
- Orientation of the principal axis
- Mass moments of inertia
- Radii of gyration

Note

You can calculate surface area only for parts.

Center of mass, center of volume, mass moment of inertia, and principal axis coordinates are output with respect to the global coordinate system. Principal moments of inertia and radii of gyration are output with respect to the principal axes.

Physical property symbols

The Physical Properties command places symbols on the part or assembly to show the center of mass location, center of volume location, and principal axis orientation. You can display and hide the symbols individually, or display them all at once using the Physical Properties dialog box.

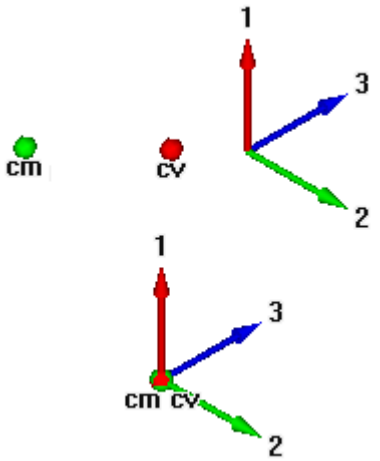

Calculating and storing physical properties

When you calculate physical properties for a part, the Physical Properties command calculates and stores the properties for the individual part. In the Assembly

environment, the Physical Properties command calculates and stores the properties for the entire assembly.

If you want to calculate the properties for a portion of an assembly, you can select the individual parts in the assembly before selecting the command. The software places property symbols indicating the center of mass, center of volume, and principal directions for the selection set.

Physical properties for a selection set are not stored with the assembly. When you close the Physical Properties dialog box, the property data for the entire assembly is restored. To store physical properties of a selection set, click the Save As button before dismissing the Physical Properties dialog box.

Using coordinate systems

You can calculate physical properties relative to a user-defined coordinate system. A list of all user-defined coordinate systems plus an entry for the Model Space coordinate system, which is the default, is available on the Physical Properties dialog box. Calculating physical properties relative to a user-defined coordinate system will affect all properties other than Mass, Volume, and Surface Area.

Defining the density

Before calculating the physical properties for a part or the weld beads in a weldment assembly you must specify the density of the part or weld bead.

For a part, you can define the density on the Material tab of the Solid Edge Material Table dialog box, the Physical Properties dialog box, or the Variable Table. The Change button on the Physical Properties dialog box displays the Solid Edge Material Table dialog box so you can edit the material type and/or the density for the part.

For weldment assemblies, you can define the weld bead material density using the Weldment Assembly command, or the Variable Table.

When you have defined the density, click the Update button. You must provide a positive density value. If you do not specify a density, Solid Edge uses a density of zero and produces the error message: Density Must Be A Positive Numeric Value.

> **Note**
>
> You can create material-specific template files by defining the material and density in the files you use as templates.

In the Assembly environment, the software checks each part in the assembly to determine if a density was defined for each part in the Part or Sheet Metal environments. If you have not specified a density for a particular part, you can supply a density value for calculating the part's physical properties.

When you save an assembly, part, or sheet metal document, you can also save the density information with the document. The information can be used later to update the physical properties.

User-defined properties

You can override physical properties calculated by the software by setting the User Defined Properties option on the Physical Properties dialog box in the Part and Sheet Metal environments. For example, if you know the mass for a particular part,

you can supply the value, and it will be treated as computed data. However, if you then update values, the software will recalculate and override any user-defined values. The physical properties will not update using a mix of user-defined and system calculated properties.

Note

Density, Mass, and Volume cannot be zero.

Failed parts or assemblies

Physical properties cannot be calculated for parts with features that have not recalculated correctly. In the Part and Sheet Metal environments, you can use the Error Assistant dialog box to determine which parts have features that have not recalculated correctly and why.

Updating physical properties

If you change a part or assembly so that its physical properties change, the colors of the physical properties symbols change to show that the last calculated physical properties are out-of-date and should be updated. For example, if you change the material density for a part, the physical properties symbols can go out of date.

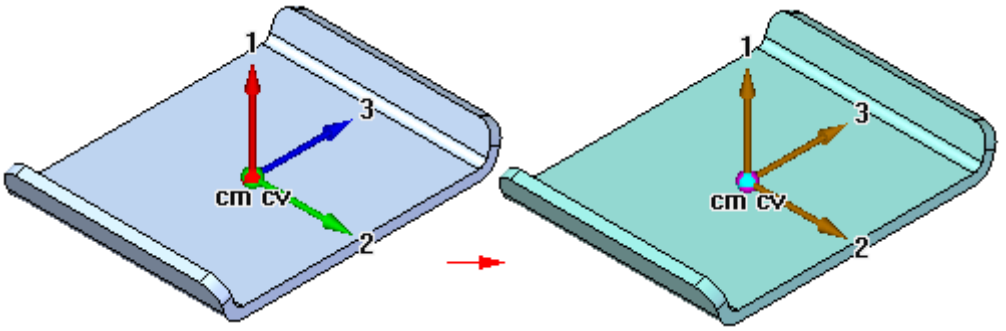

A part can also become out-of-date if you add, delete, or modify a feature. An assembly can become out-of-date if you add or delete a part from the assembly, or if you add or remove assembly features.

In the Part and Sheet Metal environments, you can set or clear the Update on File Save option to specify whether the physical properties are automatically updated when you save the document. You can also update the physical properties of a part or assembly by selecting the Update button on the Physical Properties dialog box. A message is displayed at the bottom of the dialog box that indicates whether the physical properties are up-to-date or out-of-date.

Physical properties manager

In the Assembly environment, you can use the Physical Properties Manager command to view, edit, and manage the physical properties for all the parts in the active assembly. This can be useful because you can view and edit the physical properties for all the parts at once, rather opening each part document to view and edit its physical properties.

Mapping physical properties for synchronization with Teamcenter

By using mapping definition files, physical properties such as density, mass, and volume can be stored in the Teamcenter database and displayed and modified in both Solid Edge and Teamcenter. This synchronization allows an attribute in one application to be updated automatically when a modification is made to the corresponding attribute in another application. Refer to the *Sold Edge Embedded Client Administrator's Guide*, for attribute mapping syntax and examples.

Activity: Computing mass properties of an assembly

Overview

This activity shows how to change materials, compute mass properties and center of gravity of an assembly.

Turn to **Appendix A** for the activity.

Analyzing movement and detecting collisions in assemblies

You can use the Drag Component command in the Assembly environment to analyze physical motion and detect collisions between parts in an assembly.

The Options button on the Drag Component command bar displays the Analyze Options dialog box so you can define the analysis options you want to use. To reduce the performance impact when working with large assemblies, you should limit the analysis to as few parts as possible.

The Analyze (Shown Parts Only) options allow you to specify whether only active parts or both active and inactive parts are analyzed. With large assemblies, you can activate only the parts you want to analyze, which can improve performance. You can also hide the parts you do not want to analyze. These options are used when you set the Physical Motion option on the command bar.

The Collision Options settings allow you to specify whether only the parts that contact the selected part are analyzed or that all parts that move in tandem with the selected part are analyzed. These options are used when you set the Detect Collisions option on the command bar.

Analyzing motion

The Physical Motion option on the command bar allows you to simulate motion in an assembly. This option detects contact between parts and applies temporary constraints between the contacting parts to simulate motion. When you set this option, you must select a part and define a movement type and value. Also with this option, the Distance and Angle values you specify are applied incrementally, rather than all at once. This makes it possible to analyze motion in mechanisms that contain gears and other forms of sliding or intermittent contact.

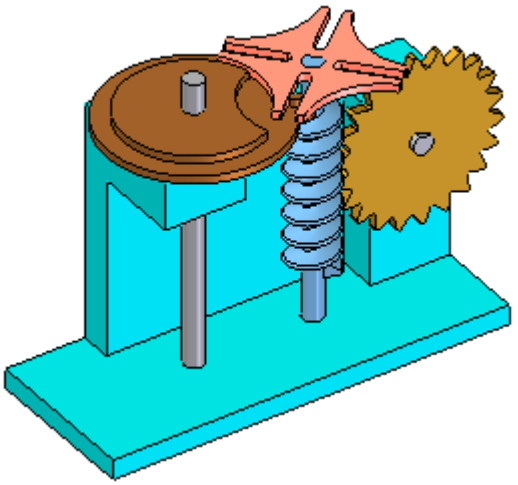

Collision detection

The Detect Collisions option on the command bar allows you to detect collisions between parts. You perform collision detection by dragging a part to simulate its movement in the assembly. The part you are dragging must be free to move in the assembly or be grounded. You can only select grounded parts and subassemblies when the Locate Grounded Components option on the Analysis Options dialog box is set.

If the part is not free to move, you can use the Suppress command on the shortcut menu to temporarily suppress one or more of its assembly relationships. When collisions are detected, the display changes to temporarily highlight the faces that are involved in the collision. You can also specify that the part you are dragging stops temporarily at the point of collision or that an audible warning is given.

If you are working in a shaded view, and a hidden face is involved in a collision, you will not be able to see the hidden face highlight. To see these faces highlight, set the view to Vector Hidden Line.

Note

The current zoom level impacts the accuracy of collision detection. For more accurate results, zoom in closer to the area where collisions are suspected.

Distance and area measurement

You can measure distances or areas, even when you are in the middle of another task. To set the units for measuring distances or areas, use the Properties command on the Application menu.

Measuring distances in 2D

In the Draft environment, you can measure distance using the Measure Distance command. These commands measure linear distances or measure the cumulative linear distance along a series of points. The first point you click establishes the origin of the measurement (1). After that, you can select any keypoint to see the distance between it and the origin, as well as the delta distance along each principal axis (2).

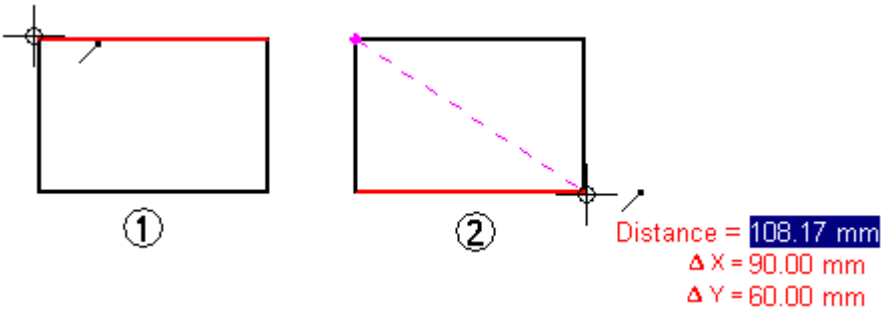

Clicking the keypoint adds it to a series of measurement points. Then you can select another point to see the new linear distance and deltas (3), or click it to see the distance between the last two points and the total cumulative distance from the origin to the last point (4). Click the right button to reset the command.

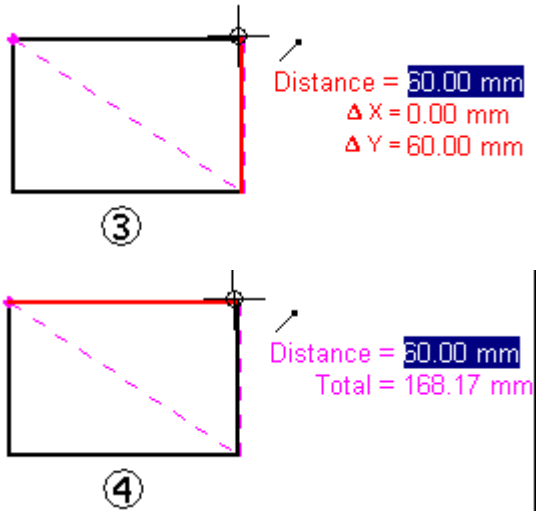

Measuring distances and angles in 3D

In the Part, Sheet Metal, and Assembly environments, the Measure Distance command measures linear distances. The first point you click establishes the origin of the measurement (1). After that, you can select any keypoint (2) to display the Measure Distance dialog box which displays the keypoint select type, the true distance, the apparent screen view distance, and the delta distance along each principal axis.

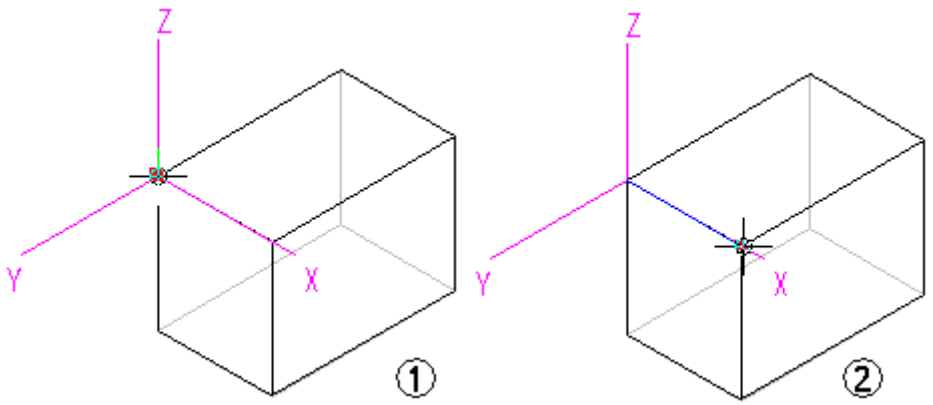

In the Part, Sheet Metal, and Assembly environments, the Measure Angle command measures angles. You can measure between any two faces or between any three points.

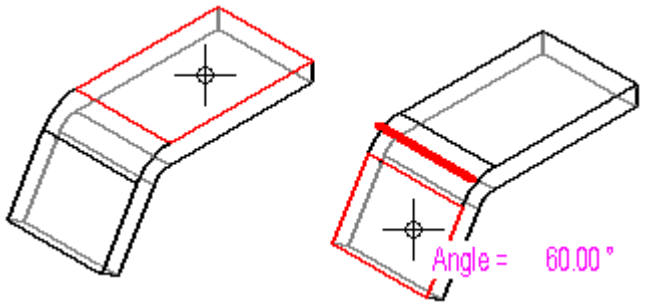

Measuring minimum distances

In the Part, Sheet Metal, and Assembly environments, you can use the Measure Minimum Distance command to measure the minimum distance between any two elements or keypoints. You can use the Select Type option on the Minimum Distance command bar to filter which type of elements you want to select. When working in the context of an assembly, you can also use the Activate Part option to activate the parts you want to measure.

Measuring normal distances

In the Part, Sheet Metal, and Assembly environments, the Measure Normal Distance command measures normal distances between a planar element or line and a keypoint. You can use the Element Types option on the Measure Normal Distance command bar to filter which type of elements you want to select. You can use the Key Point option to specify the type of keypoint you want to identify when measuring the distance. You can use the Coordinate System option to select a user-defined coordinate system to define one of the points. If you use a coordinate system, the returned values will be relative to the specified coordinate system. When working in the context of an assembly, you can also use the Activate Part option to activate the parts you want to measure.

Measuring areas

The Measure Area command, available only in the Draft environment and in 2D profiles and sketches, measures the area inside a closed boundary (1). You can also measure the cumulative area inside more than one closed boundary by holding the Shift key as you click elements (2). Each time you click, the area of the last element is displayed, along with the total area. Click another element without holding the Shift key to reset the command.

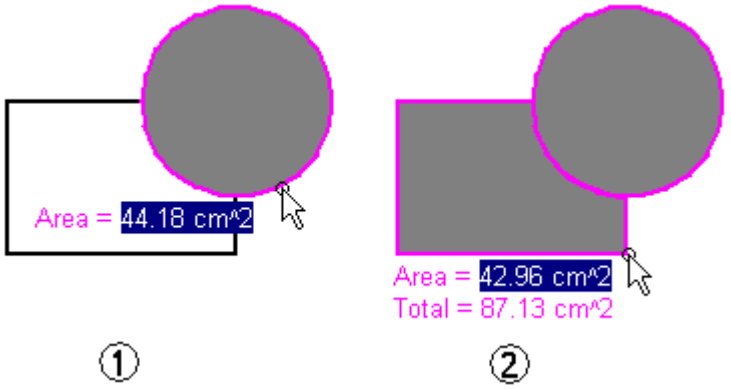

Measuring lengths

The Measure Total Length command measures the cumulative length of a select set of 2D geometry.

Measuring automatically

In addition to the individual distance, area, length, and angle commands, you can use the Smart Measure command in 2D and 3D environments to measure automatically based on what you select:

- Select a single 2D element or 3D object to measure its length or its angle or radius.
- Select two or more 2D elements or 3D objects to measure the distance or angle between them.

The Smart Measure command works like the Smart Dimension command, except that it does not place a dimension as a result.

Copying measurement values

You can copy the highlighted measurement value to the Clipboard by pressing Ctrl+C. You can then use the copied value as input for another command. For example, you can paste the copied value into the Line command bar to define the length of a line. Use the Tab key if you want to highlight a different value.

Measuring drawing view geometry

When you measure model geometry within a drawing view, or when you measure distances between model edges in two drawing views, you can select the Use Drawing View Scale check box on the command bar to specify that the measured value is displayed using the equivalent of the model distance.

Alternatively, you can apply a user-defined scale value by selecting it from the Scale list on the command bar.

Note

- You can show the scale of a drawing view using the General page (Drawing View Properties dialog box).
- User-defined scale values are defined in the Drawing View Scales section of the Custom.xml file, in the Solid Edge Program folder. See the Help topic, Add custom drawing view scales to Solid Edge.

Drag Component command

Translates or rotates parts in an assembly. The part being moved must be grounded or not fully positioned. You can use this command to do the following:

- Reposition parts dynamically along the x, y, or z axis.
- Analyze physical motion in mechanisms.
- Detect collisions between parts.

Any relationships applied to the part will prevent movement along the axis whose position is controlled by a relationship. A part will move only in an under-constrained direction. You can use the Suppress command on the shortcut menu to temporarily suppress one or more assembly relationships to allow the part to move.

You can only select grounded parts and subassemblies when the Locate Grounded Components option on the Analysis Options dialog box is set.

After you select the part you want to move, you can use the options on the command bar to specify the type of movement you want. For example, you can click the Move button, then position the cursor over one of the principal axes and drag the part to a new position.

You can restart the command by clicking the right mouse button.

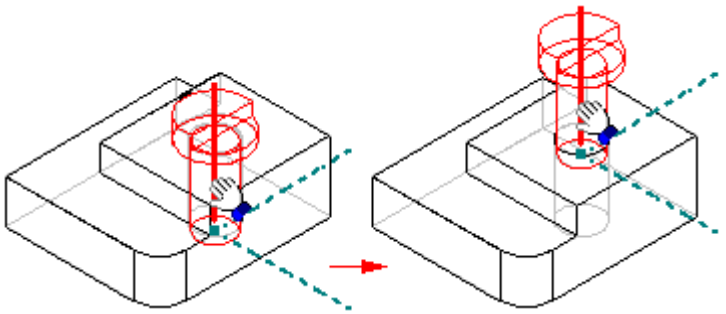

Note

Patterned parts do not participate in collision detection or motion analysis.

When you use the Drag Component command to move an adjustable part, the assembly relationships positioning the adjustable part are temporarily suppressed. When you complete a move cycle, the relationships are reapplied. If the movement you define conflicts with the adjustable part's relationship structure, the adjustable part is returned to its original position or a position that is consistent with the relationship structure.

Activity: Analyzing motion

Overview

This activity shows how to use motion to analyze collisions in moving parts.

Turn to **Appendix B** for the activity.

Sensors

When constructing parts and assemblies, you often need to keep track of critical design parameters. For example, when designing a shield or shroud that encloses a rotating part, you must maintain enough clearance for maintenance and operational purposes. You can use the Sensors tab on PathFinder to define and keep track of design parameters for your parts and assemblies.

You can define the following types of sensors:

- Minimum distance sensors
- General variable sensors
- Sheet metal sensors
- Surface area sensors
- Custom sensors

Creating a sensor

Although there are several types of sensors, you follow the same basic steps when creating any sensor:

1. From the Sensors tab on PathFinder, select the sensor type you want.
2. Define what you want to track in the design.
3. Define the operating limits for the sensor.

Every sensor you define in the document is displayed and managed on the Sensors tab on PathFinder.

Minimum distance sensors

Minimum distance sensors are used to track the minimum distance between any two elements. For example, you can track the minimum distance between two part faces in an assembly. You define a minimum distance sensor similar to how you measure the minimum distance between two elements with the Minimum Distance command.

When you click the Minimum Distance Sensor button on the Sensors tab, the Minimum Distance command bar is displayed so you can select the two elements you want to measure between. After you select the two measurement elements, the Measure Distance box displays the current minimum distance value. When you click the Close button on the command bar, the Minimum Distance Sensor Parameters dialog box is displayed so you can define the sensor parameters you want, such as the sensor name, display type, threshold value, sensor range, and so forth. When you click OK, the new sensor is displayed on the Sensors tab.

General variable sensors

You can use a general variable sensor to track variables, such as driving and driven dimensions. To create a general variable sensor, select the Variable Sensor button on the Sensors tab, then select the variable you want in the variable table. When

you click the Add Variable button on the Variable Sensor Parameters dialog box, the variable value is added to the Current Value box. You can then define the remaining sensor parameters.

Sheet metal sensors

You can use sheet metal sensors to track design parameters, such as the minimum distance between particular types of sheet metal features and part edges. You can create your own sheet metal sensors from scratch, or you can select from a list of predefined examples.

Sheet metal sensors are available only in sheet metal documents.

To create a sheet metal sensor, select the Sheet Metal Sensor button on the Sensors tab, then use the Sheet Metal Sensor command bar to define the faces and edge sets you want to track. When you click the Finish button, the Sheet Metal Sensor Parameters dialog box displays so you can define the remaining sensor parameters.

Note

Sheet metal sensors are not available in 64-bit systems.

Surface area sensors

You can use a surface area sensor to monitor a surface or a set of surfaces. You can monitor both positive and negative surface area. A negative surface area sensor monitors the "holes" or internal boundaries in a surface. For example, you may need to track the total area for a series of ventilation holes and cutouts in a surface.

The Surface Area Sensor command bar is where you define the faces you want to track as a sensor. When you click the Accept (checkmark) button on the command bar, the Surface Area Sensor Parameters dialog box displays so you can define the remaining sensor parameters. This sensor type is available only for part and sheet metal documents.

Custom sensors

You can use a custom sensor to monitor any numeric result that is calculated from a custom program. For example, you could create a custom program that assigns a manufacturing cost to each feature type used for creating sheet metal parts. The program would then monitor the part features and give you the part cost of the completed model.

When you click the Custom Sensor button, it displays the Custom Sensor DLL dialog box so you can define the DLL and user function you want. After you define the DLL and user function, and click OK, the Custom Sensor Parameters dialog box displays so you can define the sensor parameters.

Note

For more in-depth information on how to use custom sensors, see the *readme.doc* file delivered to the Solid Edge\Custom\CustomSensor folder.

Sensor alarms

When a change to the model exceeds the defined sensor threshold limit, the Sensors tab displays a special notification symbol and a sensor violation alarm is displayed in the upper-right corner of the graphic window.

Violation alarms

On the Sensors tab:

In the graphics window:

When one of the elements a sensor tracks is deleted, a warning notification symbol is displayed to call attention to it.

Warning alarms

On the Sensors tab:

In the graphics window:

When you see an alarm symbol in the upper-right corner of the graphics window, you can click it to respond to the alarm. This displays the Sensor Assistant, which contains hyperlinks to all the sensor violations and warnings in the document.

You can activate or deactivate the Sensor Assistant and alarm notification in the graphics window using the Show Sensor Indicator option on the Helpers page of the Solid Edge Options dialog box. This does not affect the operation of the sensors themselves.

To learn how to use the Sensor Assistant, see Responding to sensor alarms.

Activity: Creating a sensor

Overview

When you complete this activity, you will be able to create a distance sensor to track the motion of a simple bar linkage.

Turn to **Appendix C** for the activity.

Checking interference on parts

Solid Edge allows you to check for interference between parts in assemblies using the Check Interference command on the Inspect tab.

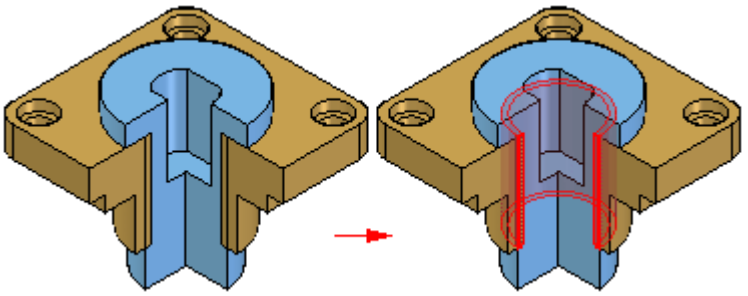

Creating sets of parts

To run an interference analysis, you must create one or two sets of parts. A set of parts typically contains many parts; however, each set can contain any number of parts. If a set of parts will include all the parts in a subassembly, you can select the subassembly using the PathFinder.

Note

You can also use the Select Tools tab on PathFinder to define a select set using a query.

Checking sets of parts for interference

You can check parts in the following ways during the interference analysis:

- All parts of set one against all parts of set two.
- All parts of set one against all other parts in the active assembly.
- All parts of set one against all currently displayed parts.
- All parts of set one against themselves.

Unless you indicate otherwise, the software uses the first option, checking all the parts of set one against all the parts of set two.

Interference and threaded features

You can use the settings on the Options Tab (Interference Options dialog box) to control how threaded fastener interference is checked.

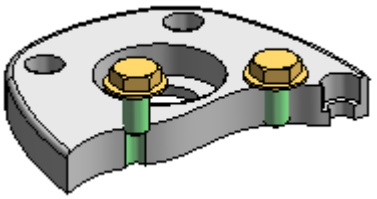

Check interference can report or ignore interferences when the threaded portion of a bolt interferes with a non-threaded hole in a mating part. For example, you would typically want to ignore interferences when using a self-tapping bolt in a non-threaded hole, but would want to report interferences when a standard bolt extends past the thread depth in a threaded mating part.

The Ignore Threaded Fasteners Interfering With Non-threaded Holes option allows you to control whether interference is detected in these situations.

Check interference also can report or ignore interferences between a threaded cylinder and a threaded hole whose nominal diameters match. When you set the Ignore Interferences of the Same Nominal Diameter option, if the thread pitch does not match between a bolt and a threaded hole with the same nominal diameters, no interference is detected.

Analyzing results

Before running the interference analysis, you can set options for analyzing results. The following methods are available:

- Output a report to a text file.
- Display the interfering volumes.
- Save the interfering volumes as parts.
- Highlight the interfering parts.
- Dim the display of parts that do not interfere.
- Hide parts not selected for an interference check.

If no interferences were detected during the interference analysis, the software displays a message box telling you that no interferences were detected.

Activity: Interference checking

Overview

When you complete this activity, you will know how to use the interference checking and measure tools to determine where parts interfere with each other, how to edit the part shape to correct the offending part, and how to edit part relationships.

Turn to **Appendix D** for the activity.

Lesson

3 *Lesson review*

1. What do the check interference options control?
2. Where are motion tools located in Solid Edge assembly?
3. When setting up the assembly for motion, which command steps you through the motion process?
4. What are the two types of sensors available in the assembly ?
5. Describe the difference between true/false range and horizontal range sensors.

Lesson

4 Lesson summary

- When creating an assembly, at some point you must test the design to see if it is valid. Solid Edge provides tools to calculate physical properties, analyze part motion, and check for minimum distance. Using these tools, you can quickly identify potential problem areas and correct your design.
- The physical properties dialog box, located under the inspect tab, activates graphics in the assembly view to illustrate physical properties.
- The motion commands in Solid Edge assembly set parts in motion so you can analyze the motion and check for part interference. Motion is found under the tools tab.
- Sensors help monitor critical design elements in assembly design applications where parts must maintain a minimal clearance from others. Sensors can monitor required conditions and warn when a condition is not met. The sensors tab is located on PathFinder.
- Interference can be checked against a subset of parts or the whole of the assembly. A part file representing the common volume defining the interference can be produced to see the shape of the interference, and to measure overlapping volumes in order to fix the problem.

A Activity: Computing mass properties of an assembly

Overview

When you complete this activity, you will be able to change material types in parts, and then compute the center of mass in an assembly.

Objectives

The activity consists of the following:

- Editing a part in the context of an assembly.
- Changing the materials for each part.
- Computing the mass properties for the assembly.

Activity

Open the assembly and change the material

- Open and activate all the parts in the assembly *mass.asm* located in the folder where the activity files are located.

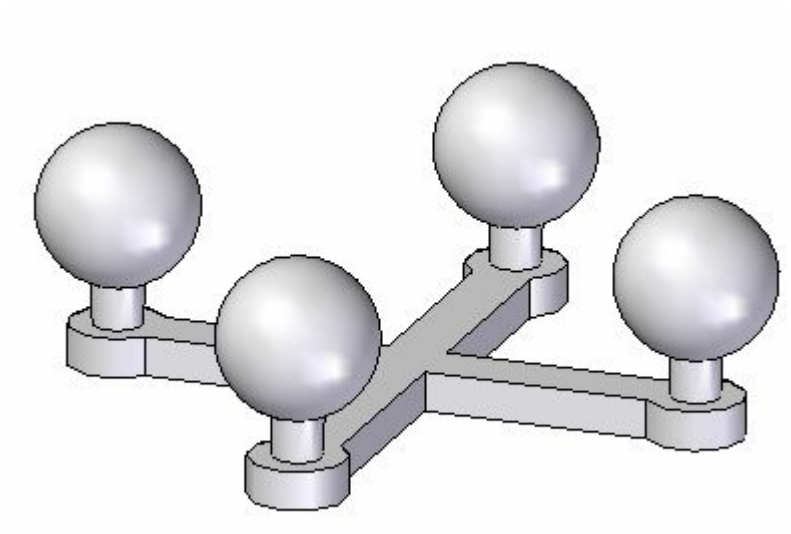

Note

The assembly consists of 5 parts. The base and the 4 posts with spheres. 4 posts were identical, the assembly could have been made with just two parts and the post placed 4 times. In this activity, the posts are different because the material and density will be altered for each post.

- Click the inspect tab, in the Physical Properties group, select the Properties Manager command .

- In the dialog box, set the material for all the parts to be copper and then click Update All.

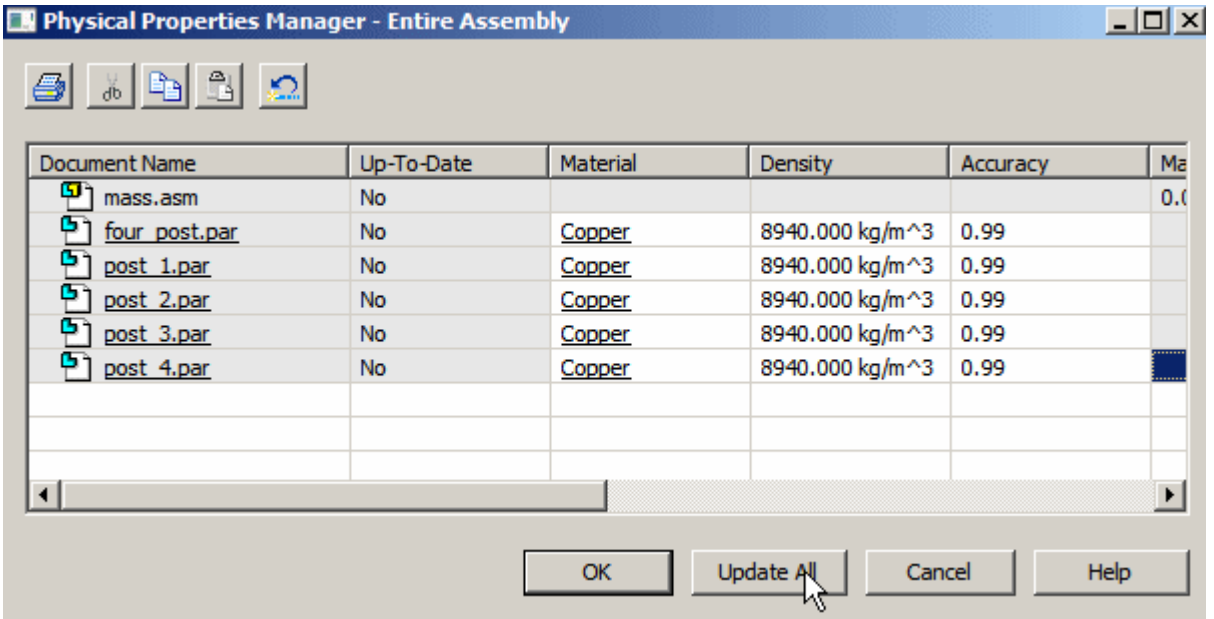

Note

Another way to change the material for each of the posts is to in place activate and change the material through File Properties® Material Table. With the Physical Properties Manager , this task is much simpler.

- Notice the color of the parts have changed to match the material.

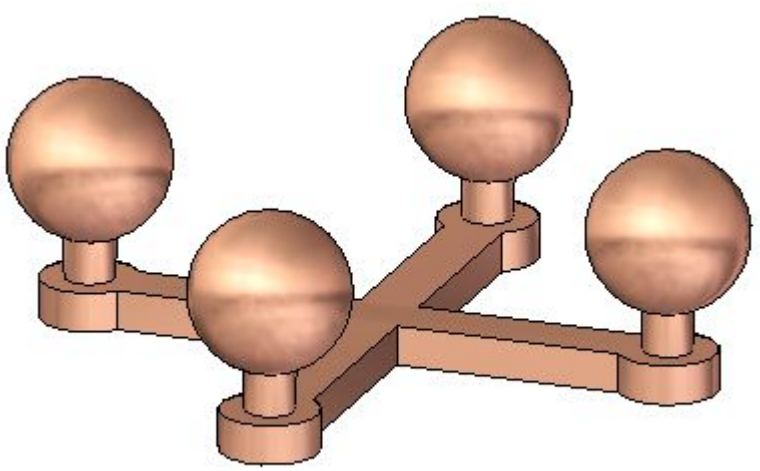

Examine the physical properties

Since the whole assembly is symmetric about the front and right planes, you would expect the center of gravity to be centered in the top view.

- Click the inspect tab, in the Physical Properties group, select the Properties command.

- Turn on the display of the center of mass and the center of volume. Notice that the mass is 1.74 kilograms. Click Update, then click close.

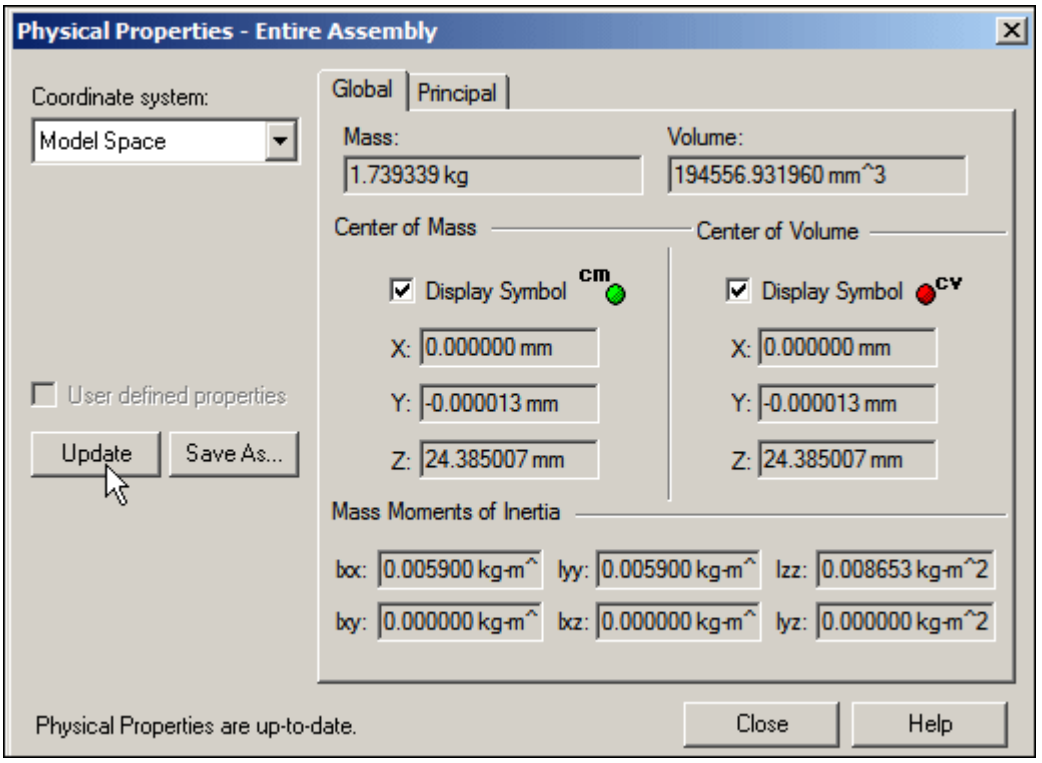

Note

Rotate the view and notice that the center of mass and the center of volume are located in the same position. The center of volume should not change for this assembly for the remainder of the activity. The center of mass will change.

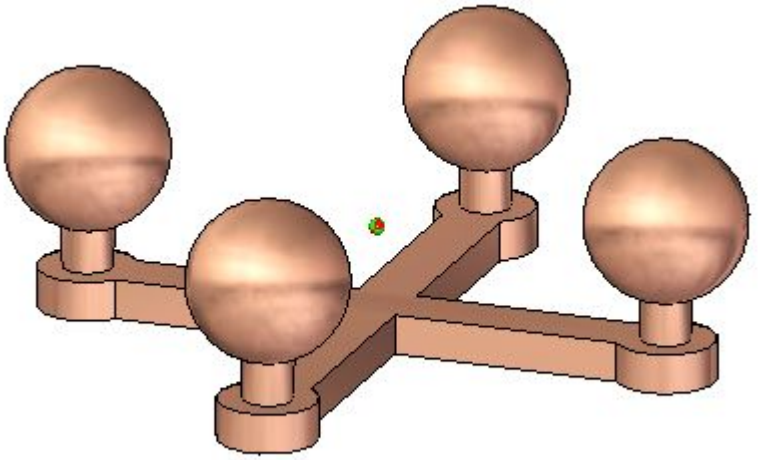

- Click the inspect tab, in the Physical Properties group, select the Properties command .

- Click the Principal tab to calculate the principal axes. Turn on the display symbol for the principal axes. Click Update, then click close.

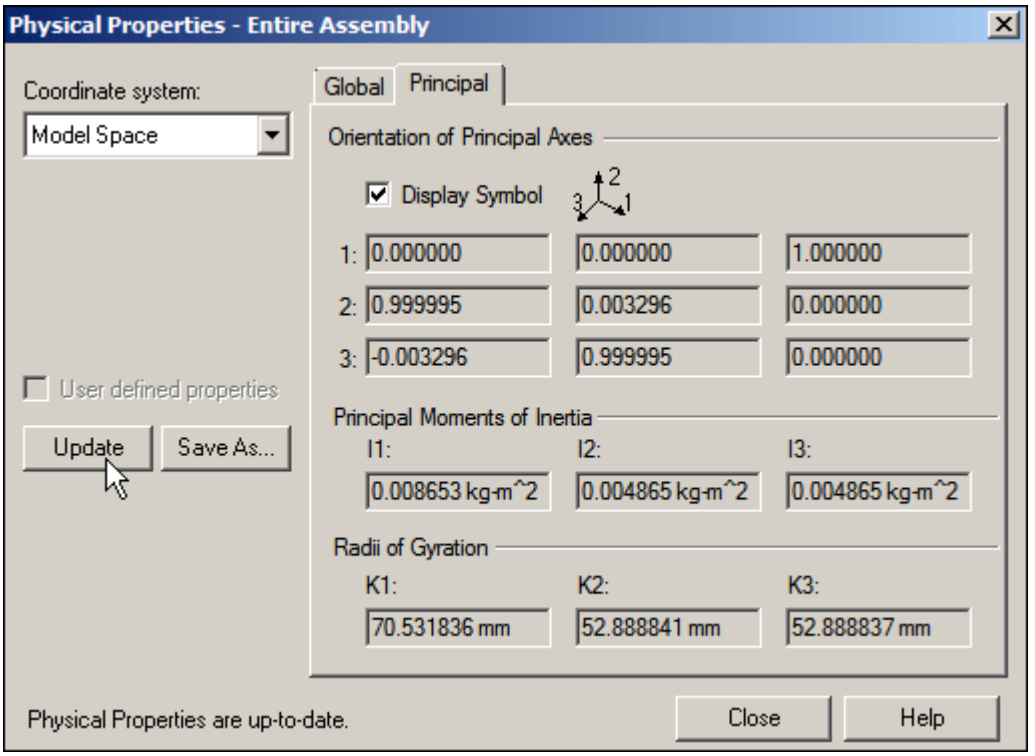

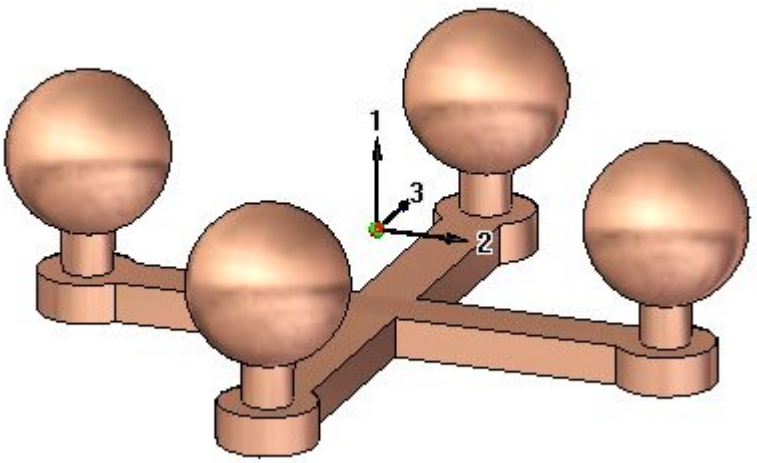

Change the material

- In the dialog box, set the material for all the parts as shown, then click Update All.

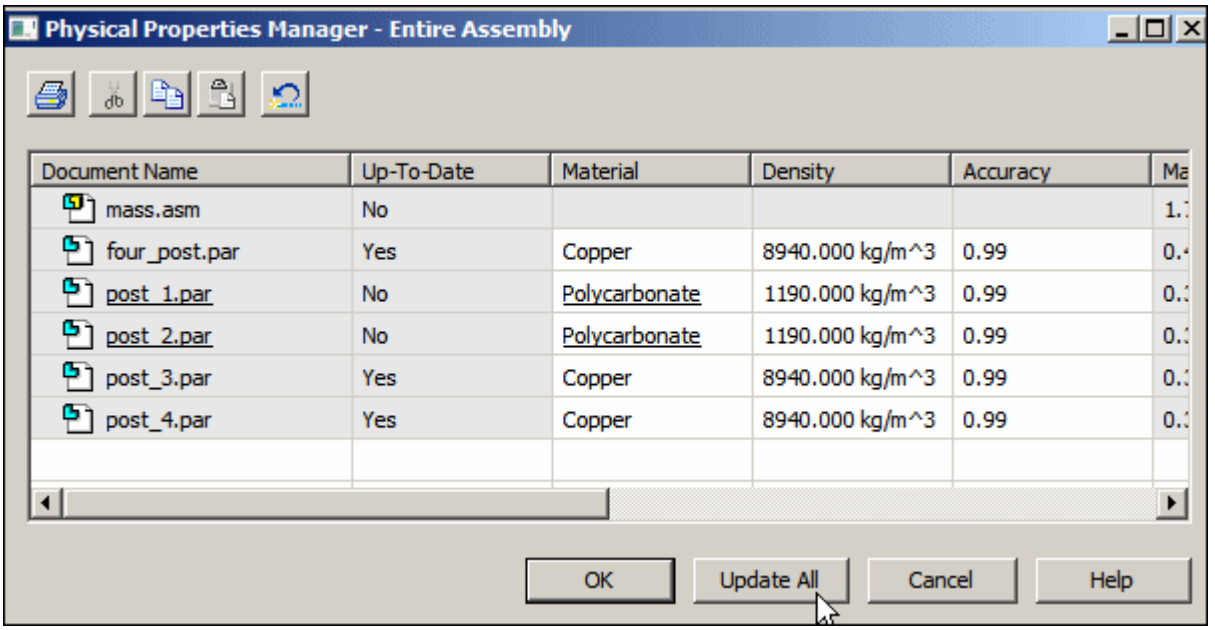

Note

Notice that Polycarbonate is much less dense than copper. This means the center of gravity will be closer to the two copper posts.

- Click the inspect tab, in the Physical Properties group, select the Properties command .

- Click the Principal tab to calculate the principal axes. Turn on the display symbol for the principal axes. Click Update, then click close.

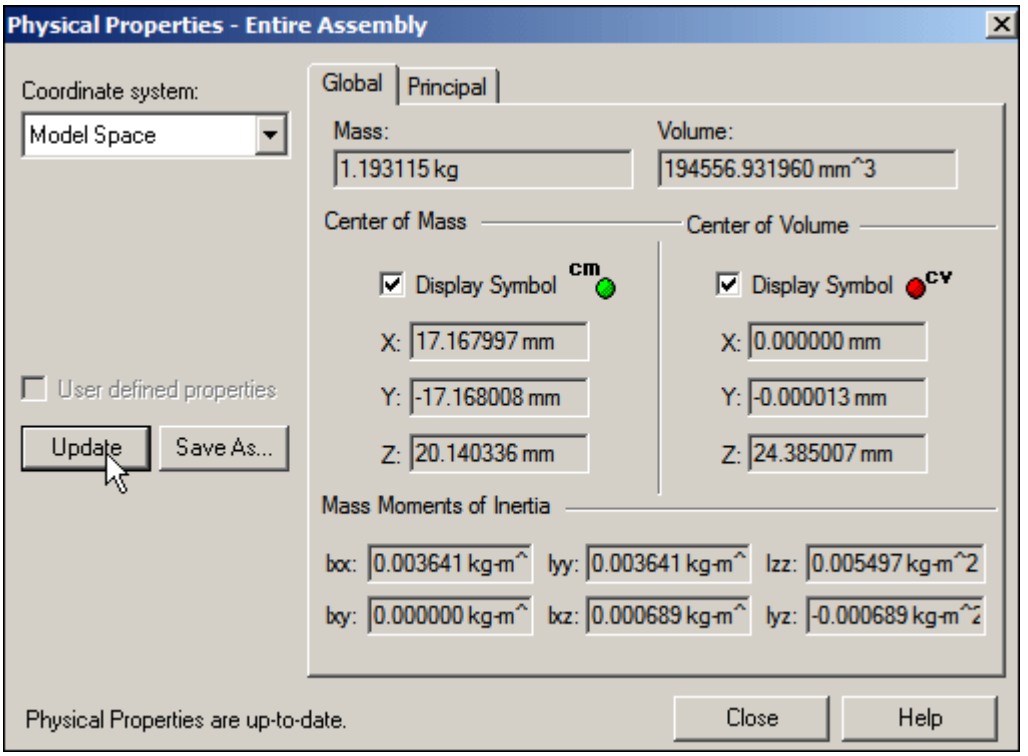

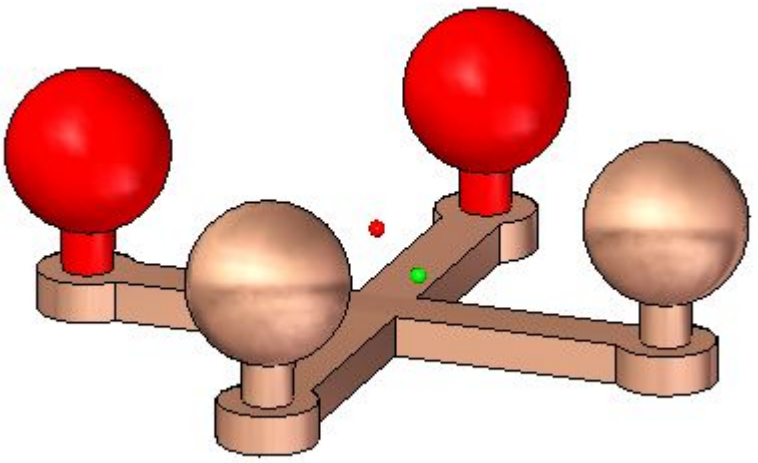

- Rotate the view to top and observe the location of the center of mass.

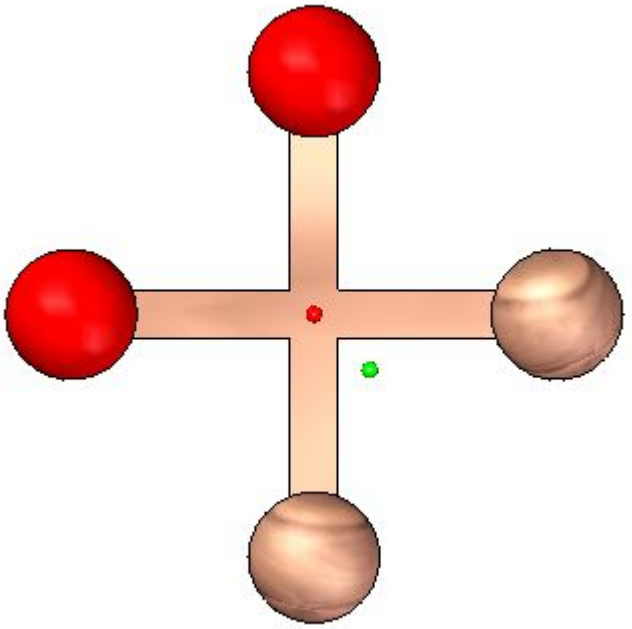

- Continue using the Physical Properties Manager. Change the material values of the parts in the assembly and observe how the mass and center of gravity change.
- Save and close the assembly. This completes this activity.

Activity Summary

In this activity you learned out to change the material of a part using the Physical Property Manager, and how to calculate the mass properties for an assembly.

B Activity: Analyzing motion

Overview

This activity shows how to use the motion to analyze collisions in moving parts.

Objectives

When you complete this activity, you will be able to use the motion command. In this activity, you will analyze the motion of a simple bar linkage.

Activity

Open the assembly

Open the assembly and activate all the parts in the assembly.

- Open and activate all the parts in the assembly *slider_linkage.asm* located in the folder where the activity files are located.

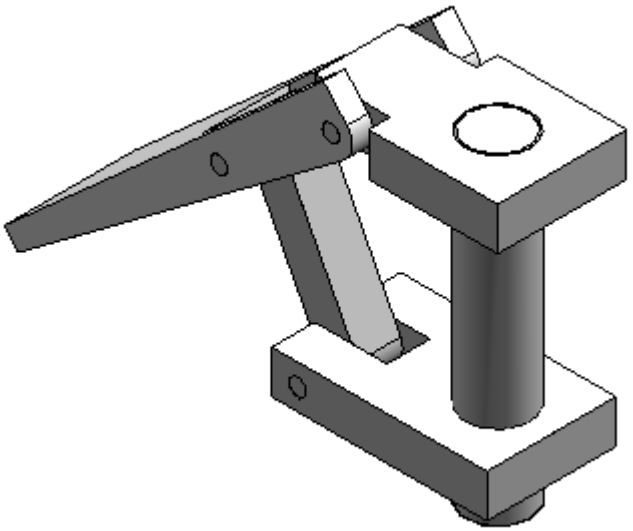

- In Assembly PathFinder, select *slider_block.par*, right-click the mate relationship, and click delete relationship.

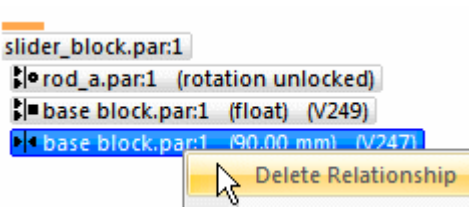

Motion environment

Enter into the motion application.

- Click the tools tab. In the environs group, click motion .
- When prompted to automatically add the parts, click no on the dialog box.

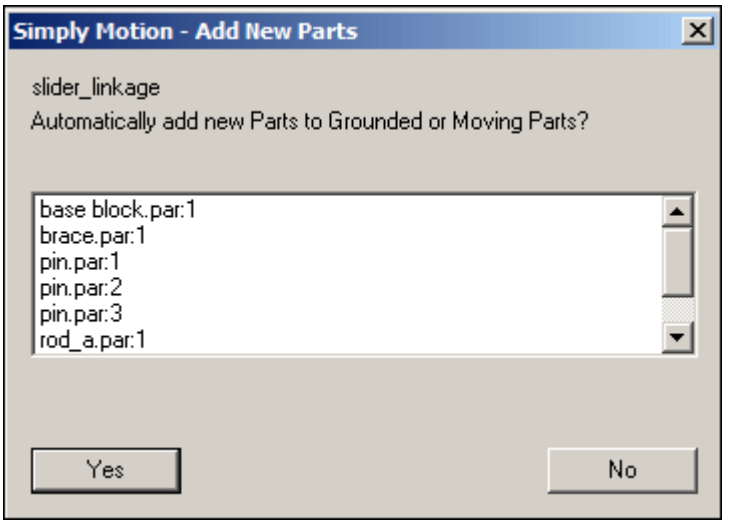

- On the Settings group, click the Intellimotion Builder command.

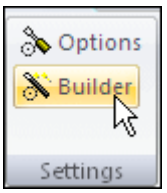

- On the motion builder wizard, click the gravity tab (make sure the gravity on box is set), and click next.

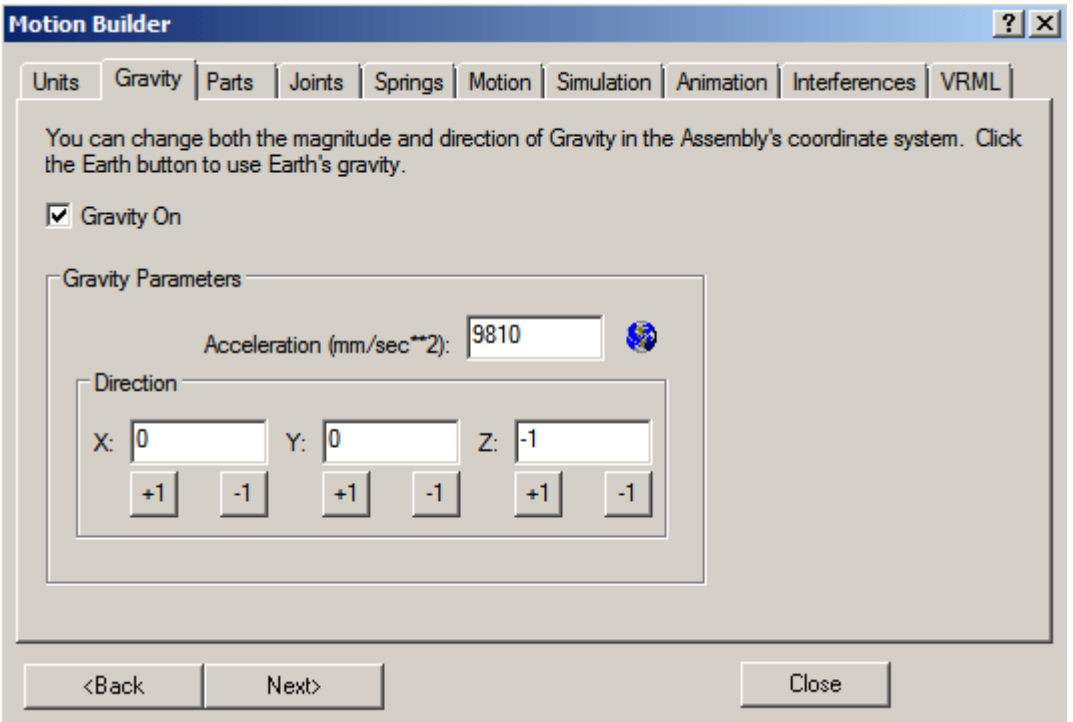

- Click the parts tab, and drag *base block.par;1*, *rod_a.par;1*, and *pin.par:1* to grounded Parts.

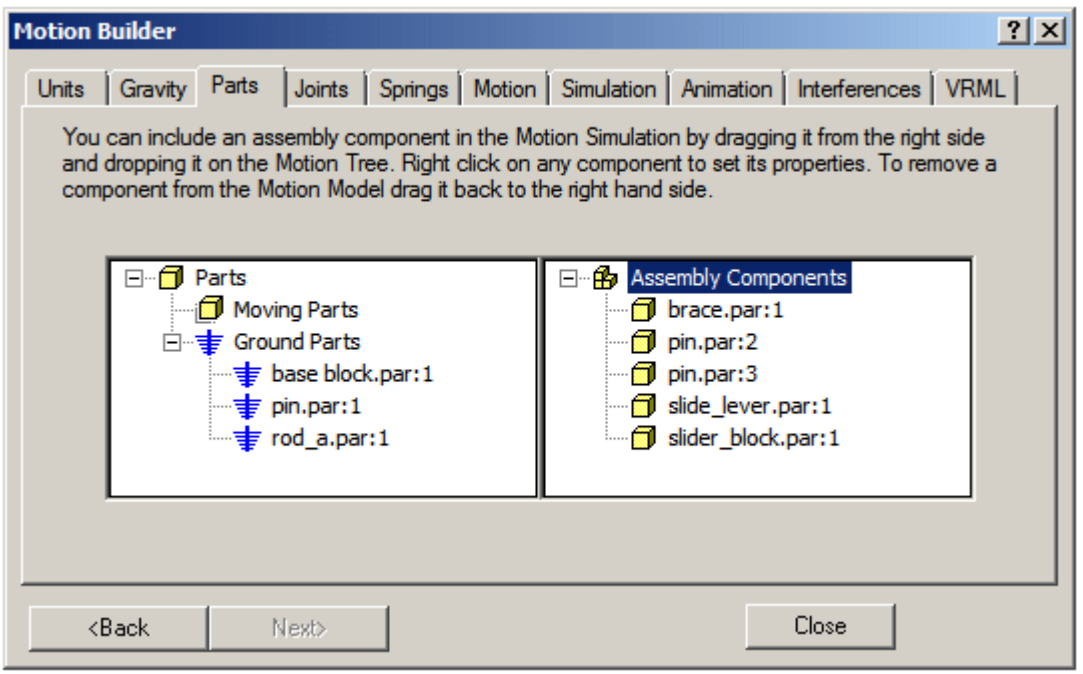

- Drag the remaining parts to moving parts. Dismiss the simply motion messages dialog box.

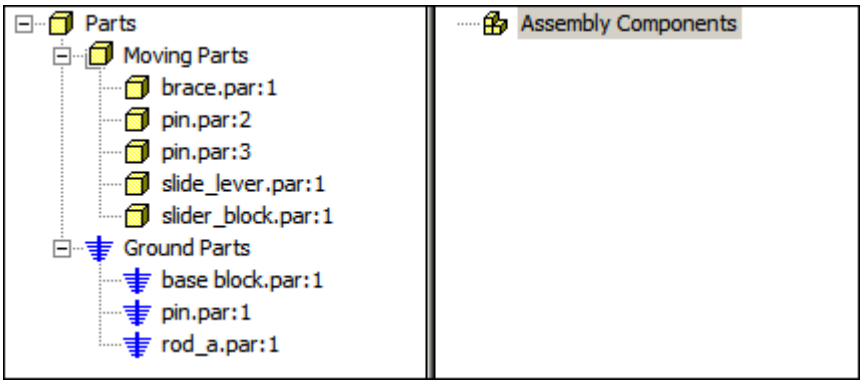

- Click next to proceed to the joints tab.

- Click the plus sign beside joints to expand the joints list.

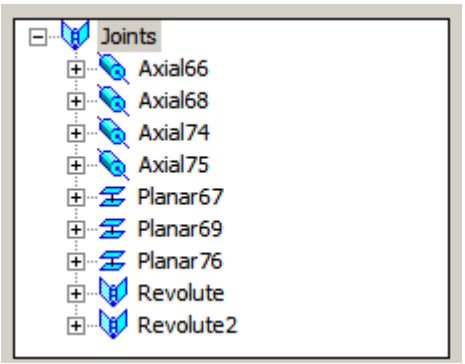

Note

Because you deleted the mate relationship before activating the motion command, Solid Edge did not recognize or create a joint from the mate relationship.

Find the initial collision

Simulate motion of the linkage and find the initial collision of the parts.

- Click the simulation tab.

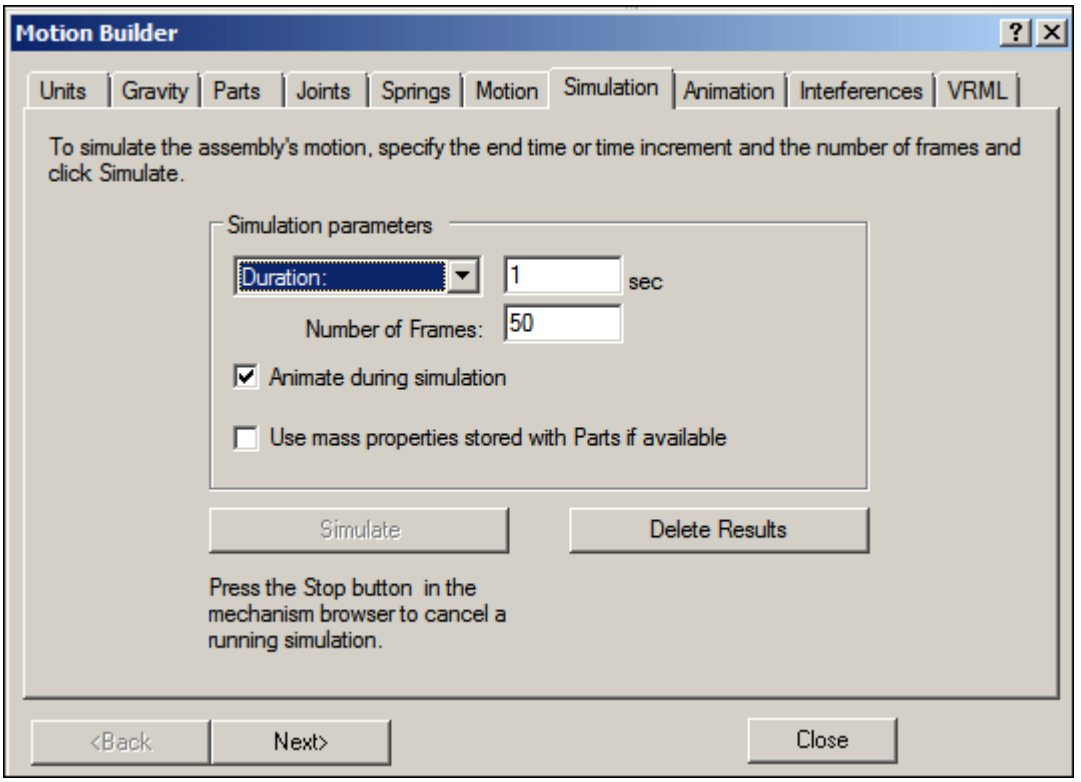

- Click simulate to set the parts in motion, and watch the motion display.
- Click the interferences tab.

- If the wizard blocks the view of the assembly, drag the wizard window to the right of the assembly window. Click check interferences.

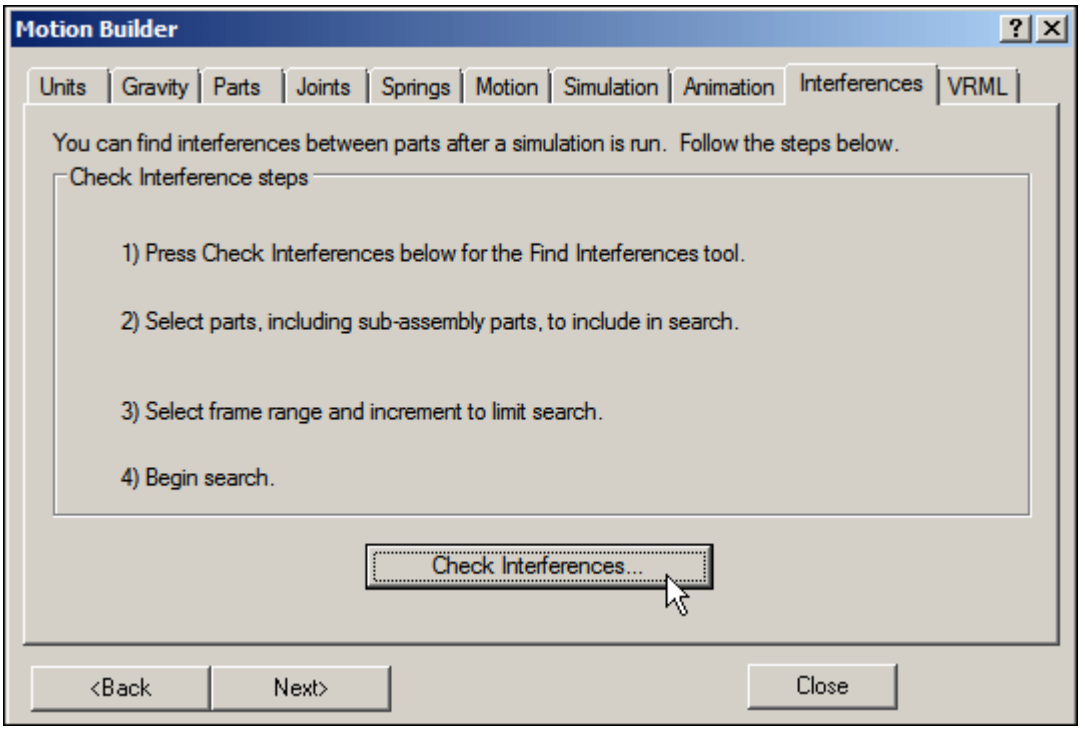

- On the assembly window, click the *brace.par* and *slide_lever.par* to add them to the list of parts to test.

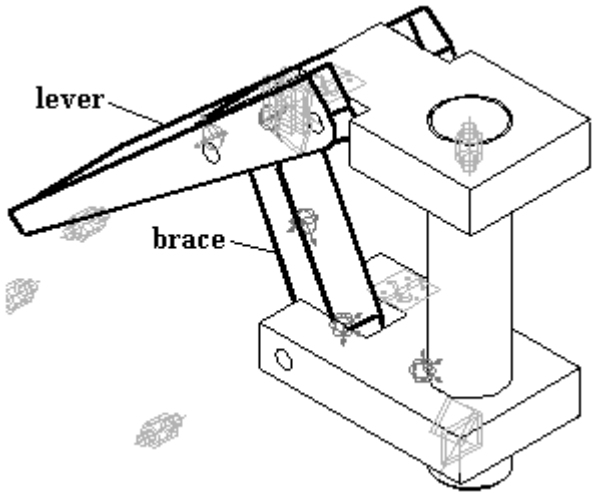

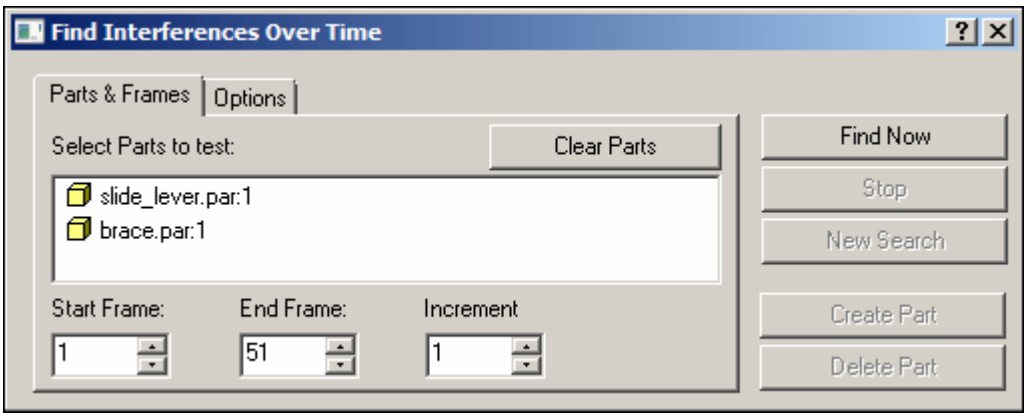

- Click the options tab, then click find first contact, then click find now.

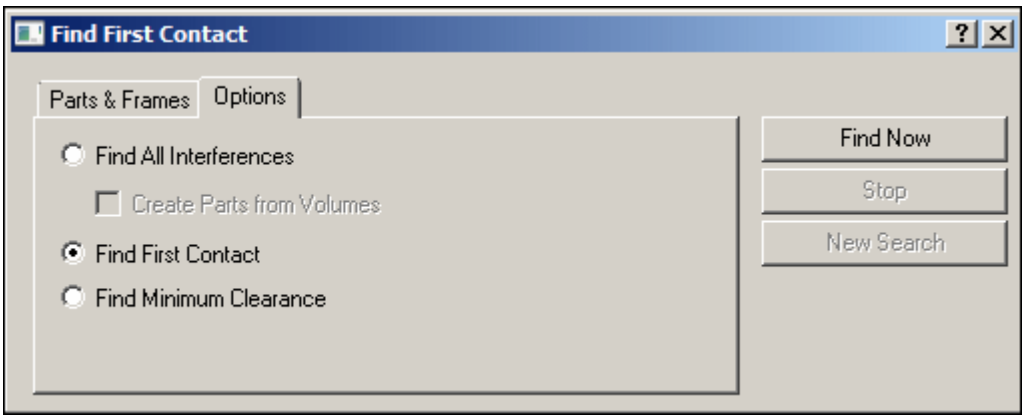

- Watch the assembly move and then stop when the first interference between the two parts is detected.

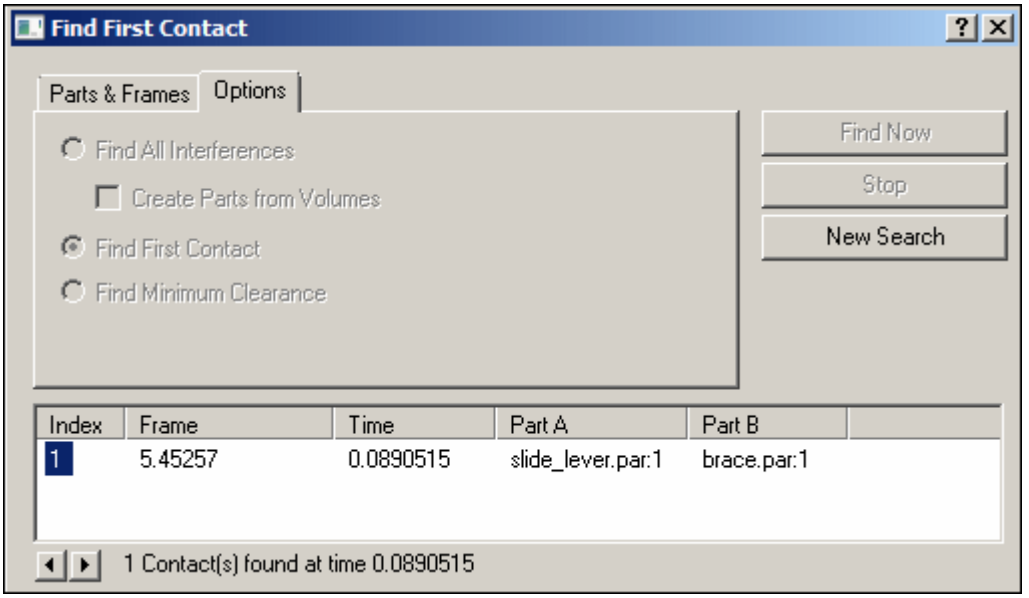

Note

Part interference begins at frame 5.45257.

- Close the find first contact dialog box.
- On the inspect tab, click measure distance. Set the element type to all elements.
- For the points to measure between, select the lower right corner of the base and the upper right corner of the slider block.

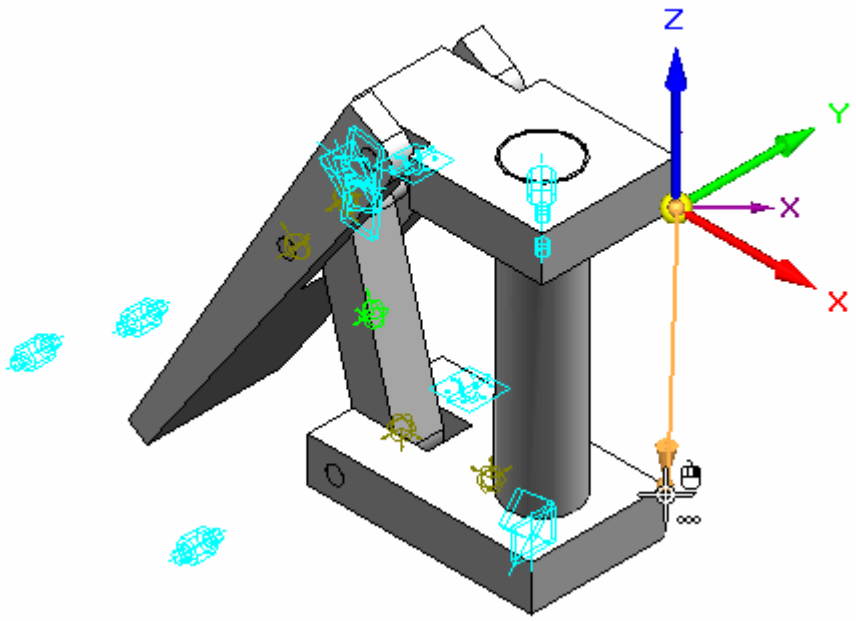

- Notice that the distance in delta Z is -110.14 mm. These parts will interfere if the distance between the base block and the slider block is 110.14 mm or greater.
- On the measure command bar, click close.
- Close any open dialog boxes. click close and return to return to the assembly.
- Save and close the file. This completes the activity.

Activity Summary

In this activity you learned how to use the motion to analyze the movement of a simple linkage. Parts that did not move were grounded and parts that did move had no constraints in the their direction of travel. When motion was applied, interference was detected and measured.

C Activity: Creating a sensor

Objectives

When you complete this activity, you will be able to create a distance sensor to track the motion of a simple bar linkage.

Activity

Open the assembly with all parts active

Open the assembly and activate all the parts in the assembly.

- Open and activate all the parts in the assembly *slider_linkage.asm* located in the folder where the activity files are located.

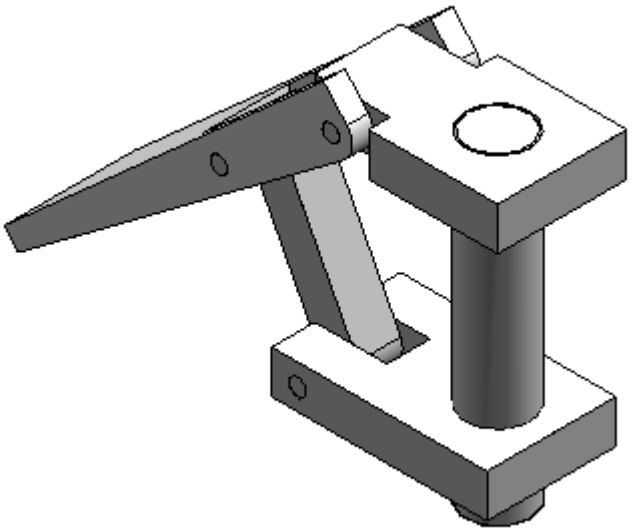

Reestablish the mate relationship

Reestablish the mate relationship deleted that has been deleted previously.

- In Assembly PathFinder, select *slider_block.par* and then click edit definition .

- For the next relationship, create a mate relationship with an 80 mm offset value between the top of the slider block and the bottom of the base block.

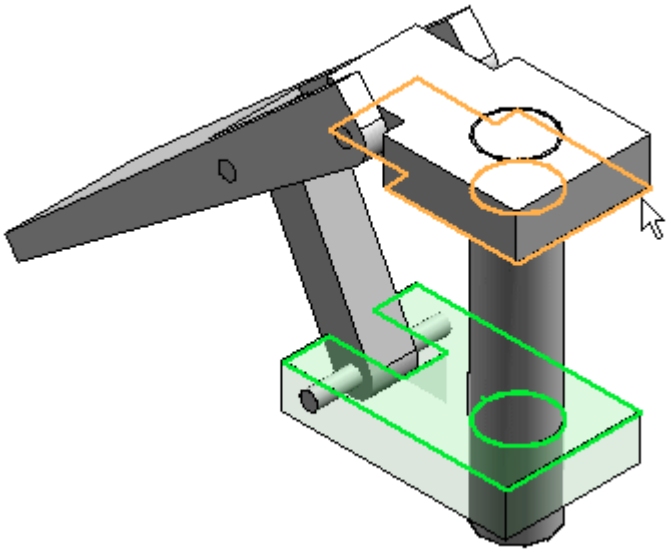

Create sensor

Create sensors.

- In PathFinder, click the sensors tab .
- Click the minimum distance sensor .
- Set the element types box to surfaces.

- To measure between the top of the slider block and the bottom of the base block, identify the two surfaces.

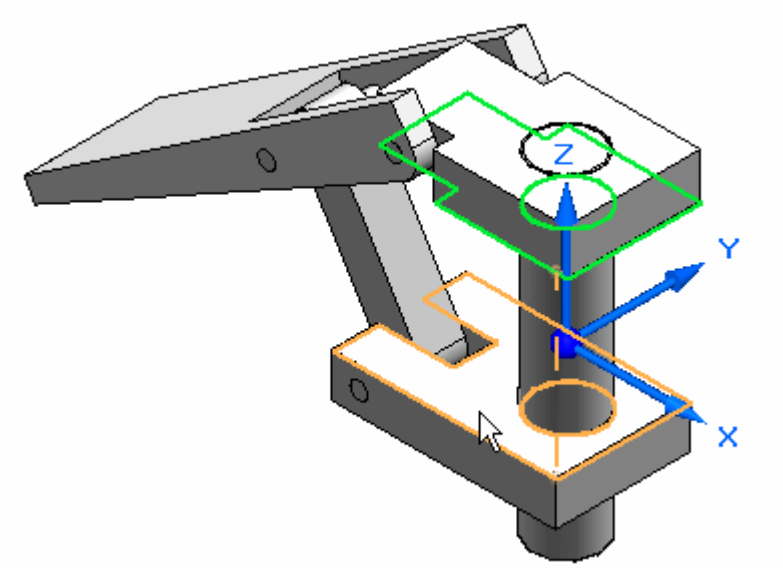

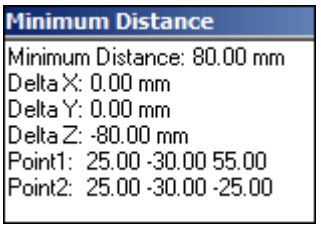

- Click close.

- In the sensor parameters dialog box, type the necessary information, and click OK. In the previous activity, when interference was found in the motion command, the software determined a threshold value of 110.14. Click OK.

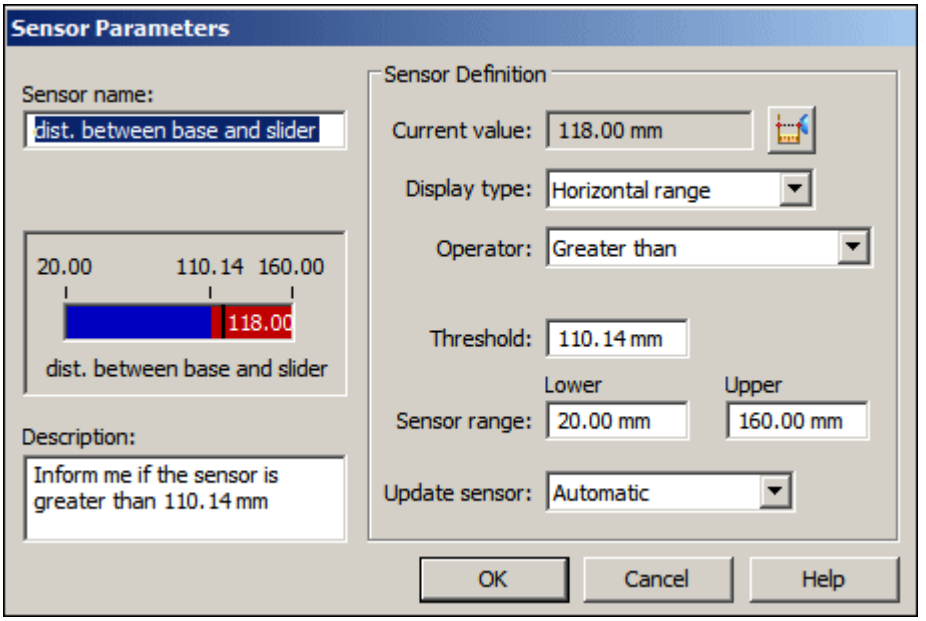

Note

Notice that the sensor is added to PathFinder.

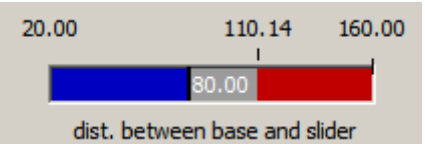

Test the sensor

- In Assembly PathFinder, click *slider block.par*, and then click the mate relationship with the 80 mm offset in the lower pane of Assembly PathFinder.

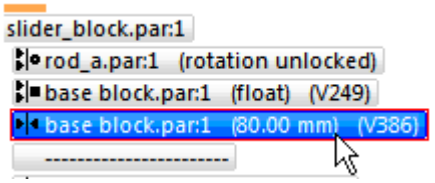

- Edit the slider block offset value to 118 mm.

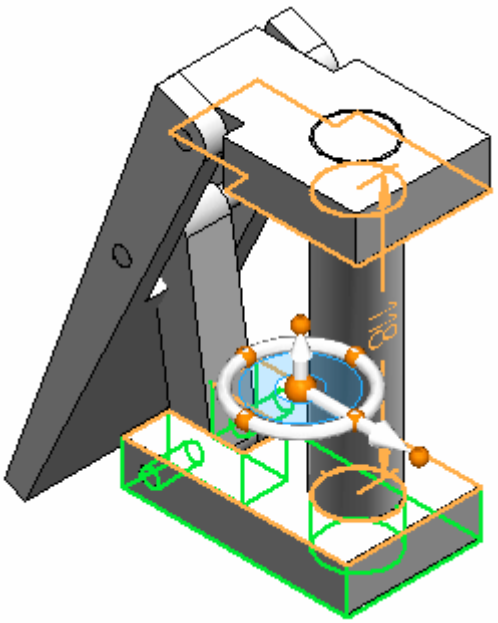

- In PathFinder, click the sensors tab.

Note

Notice that the sensor shows the range is no longer valid.

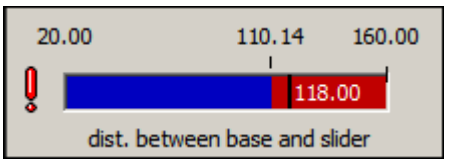

Note

When a sensor is violated, an icon appears on the upper right corner of the screen.

- Click the icon in the corner. Information is displayed. Click for more information. The sensors document in PathFinder is displayed.

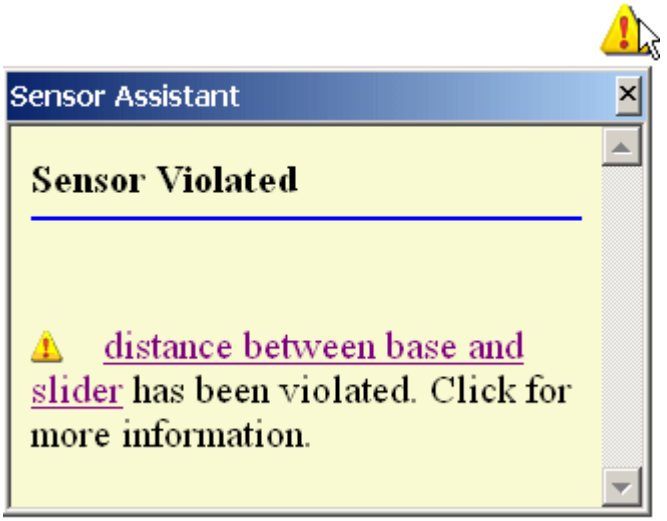

- Set the offset value of the slider block back to 50.00 mm. Notice that the sensor returns to a valid state.

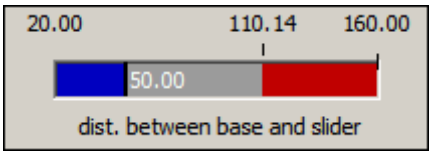

Activity Summary

In this activity you learned how to create a distance sensor and establish a valid range of travel. Parameters on the distance sensor were set so that when the travel of the mechanism passed the valid range, alerts were triggered.

D Activity: Interference checking

Overview

When you complete this activity, you will know how to use the interference checking and measure tools to determine where parts interfere with each other, how to edit the part shape to correct the offending part, and how to edit part relationships.

Objectives

The activity consists of the following:

- Inspecting parts and subassemblies to determine interference and to measure distances required to correct the interference.
- Editing parts in the context of the assembly to correct the interference.

Activity

Open the assembly and analyze the interference

Open an assembly and check it for interference between adjacent parts. Once the interference is found, the volume representing the interference will be created as surface features.

- Open and activate all the parts in the assembly *ball_valve.asm* located in the folder where the activity files are located.

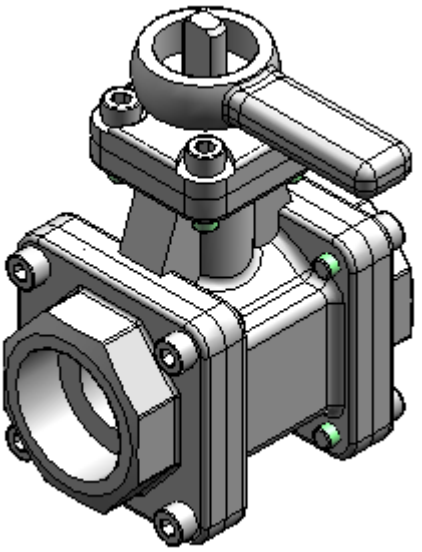

- Click the inspect tab, click the check interference command .
- Click interference options.

- On the options page, set the options as shown and then click OK.

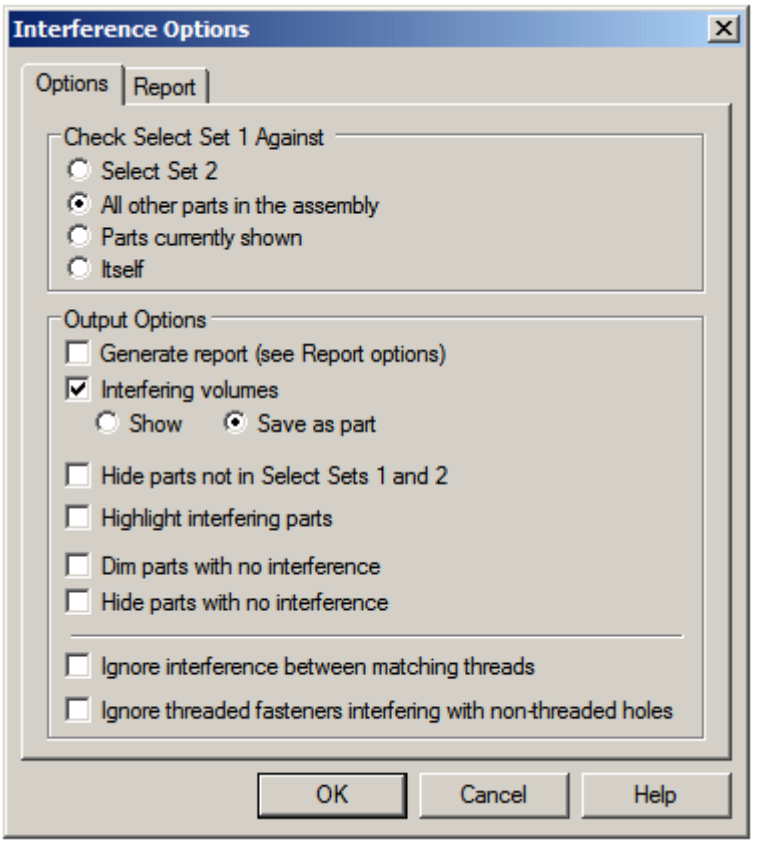

- Select the subassembly*handle and ball.asm* in PathFinder. Accept the selection.

- Click process.

Note

A new part is placed at the bottom of the list in PathFinder. This part represents the volume of the interference. The interference is represented

as a construction surface. Right click on the new part and ensure that the construction surfaces are displayed by toggling construction surfaces on.

- Click the select tool and then select the interference part to highlight the interference volume in the assembly window.

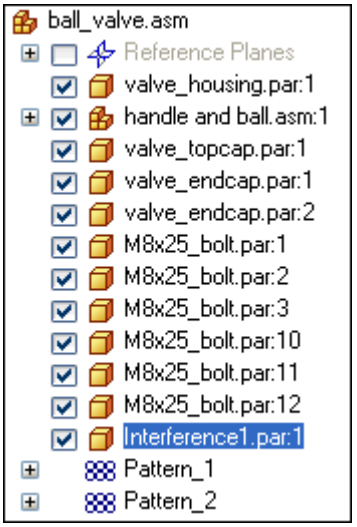

Find the interference

The highlighted interference is between the ball and the end caps. Modify the end cap must to remove the interference.

- Shade the assembly with the visible and hidden edges command .
- Press **Ctrl + R** on the keyboard to rotate the assembly to a right view. Use the zoom area command for a better view of the interference.

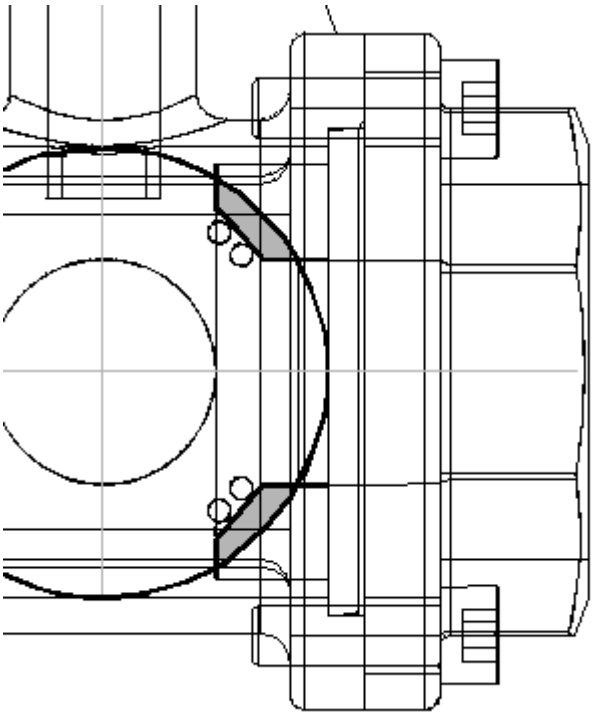

Measure the interference

Measure the elements to help decide how to modify one of the parts.

- Right click *Interference1.par* in pathfinder and then click show only.
- On the inspect tab, click the inquire element command .
- Select the outside radius of the ball.

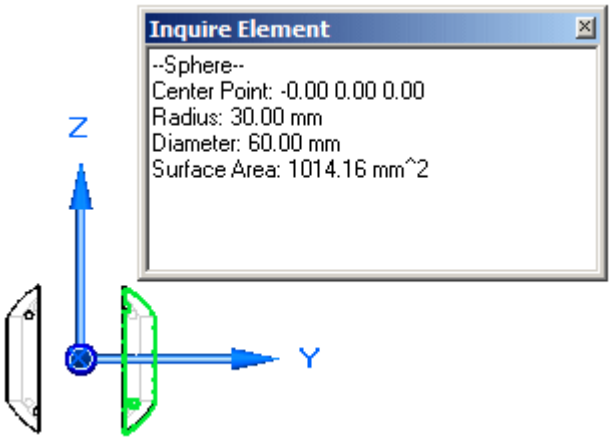

- Notice the radius is 30 mm. Remember this value when the end cap is modified.
- Right click *valve_endcap.par:2* in pathfinder and then click show.
- On the inspect tab, click measure distance. Using keypoints, measure from the radius of the ball to the midpoint on the mating surface of the end cap. To select the center of the sphere, select the circular edge shown, then select the face of the endcap shown.

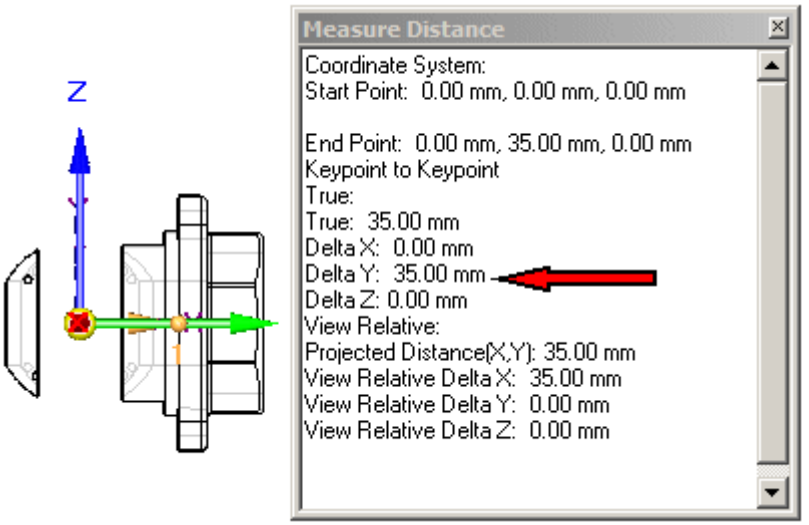

- Notice the distance value is 35 mm. Remember this value when editing the end cap. Click close to exit the measuring command.

- Click the select tool command, right-click the right end cap named *valve_endcap.par:2* in PathFinder, and then click edit.
- Press **CTRL+I** on the keyboard to return to the isometric view.
- Click the view tab. Click hide previous level .
- At the bottom of the list in feature PathFinder, click the revolved protrusion.

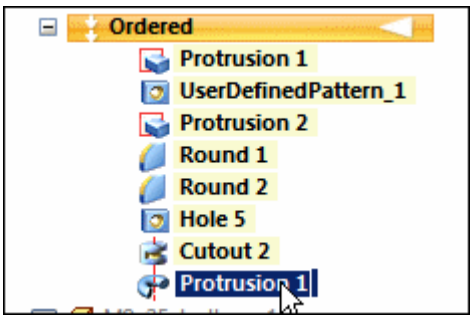

- In command bar, click the dynamic edit button .

- Select the 40 mm dimension on the profile, and change it to 35 mm.

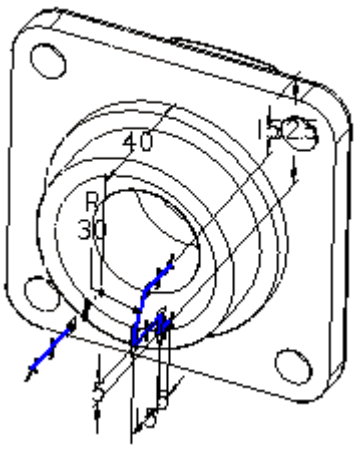

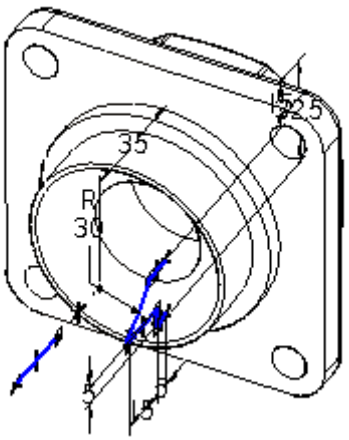

- On the home tab, click close and return .
- Display all the parts in the assembly.
- Click the select tool command and in Assembly PathFinder highlight the interference part. Press the delete key.
- Run the interference checking against the handle subassembly and all other parts. No interference should be found.
- Save the file.

Unlock the handle and reposition

Now that there is no interference between the ball and the housing, rotate the handle to a new position. Unlock the axial relationship locking the rotation, and then reposition the handle.

- In Assembly PathFinder, select the *handle and ball.asm* subassembly.
- In the bottom pane of Assembly PathFinder, click the axial align relationship.

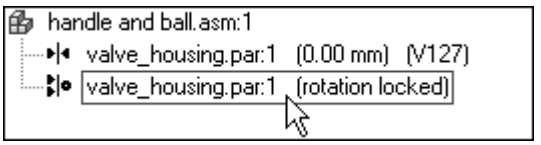

- In the command bar click unlock rotation , and then click OK. Notice that the fixed offset used by the original insert relationship is gone.
- Click edit definition .
- On the command bar, set the relationship type to the angle relationship .
- Click the Options button .

Note

Make sure the reduced steps option is cleared.

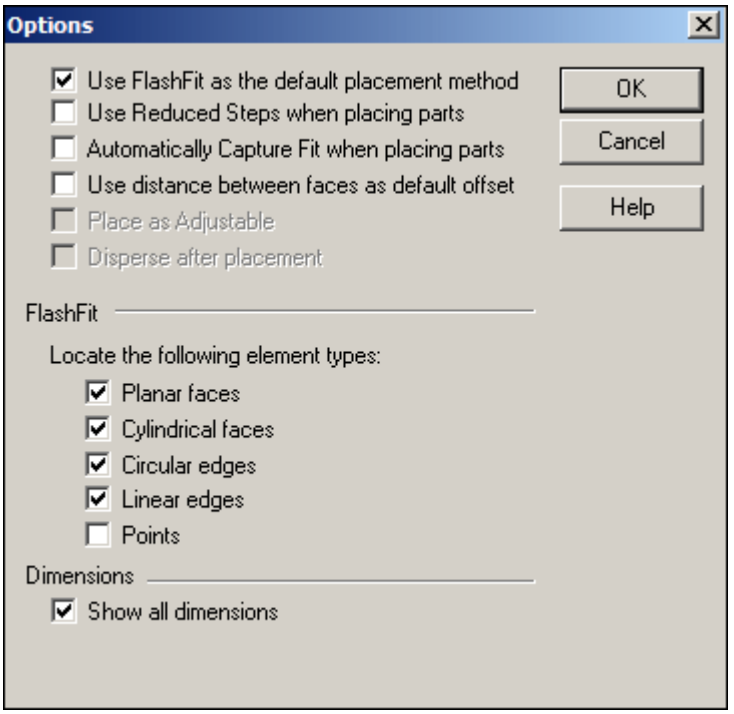

- Using QuickPick, select *valve_shaft.par:1*.

Note

If you have trouble picking *valve_shaft.par:1* it may not be active in the subassembly. Use the activate button on the command bar.

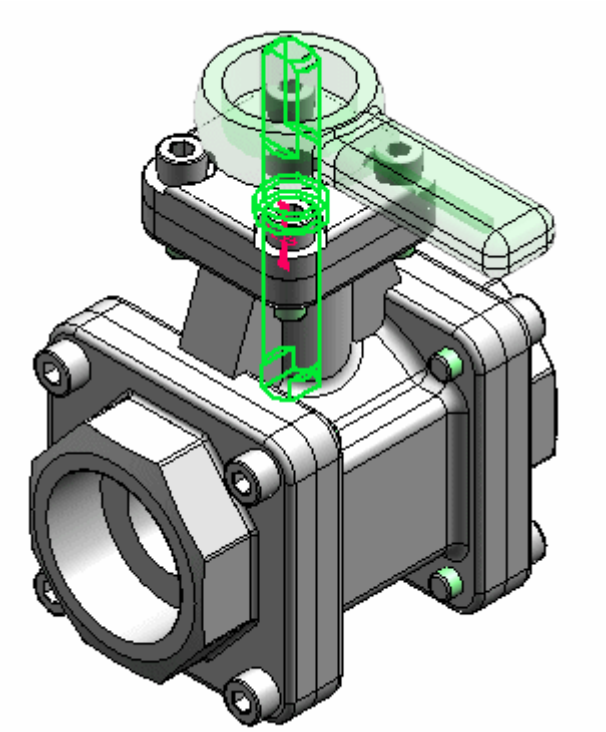

- Select the left planar side of the shaft.

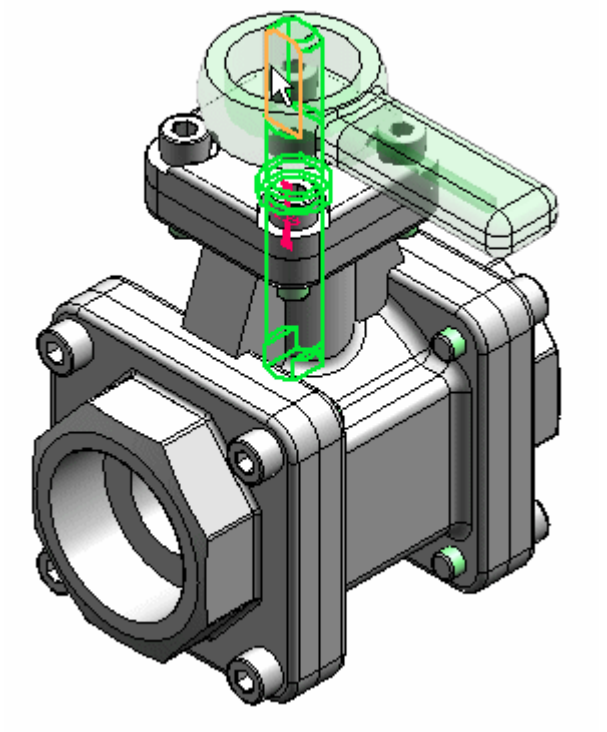

- Select the main housing.

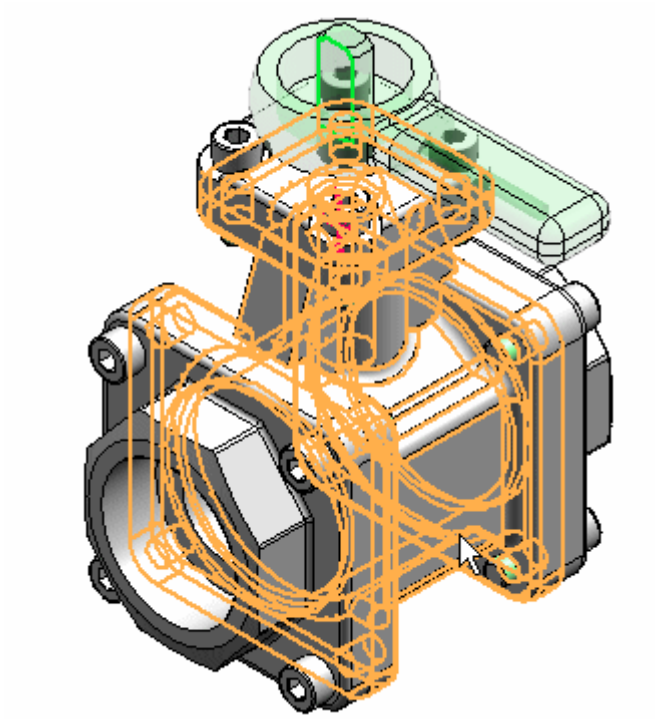

- Select the left side of the housing.

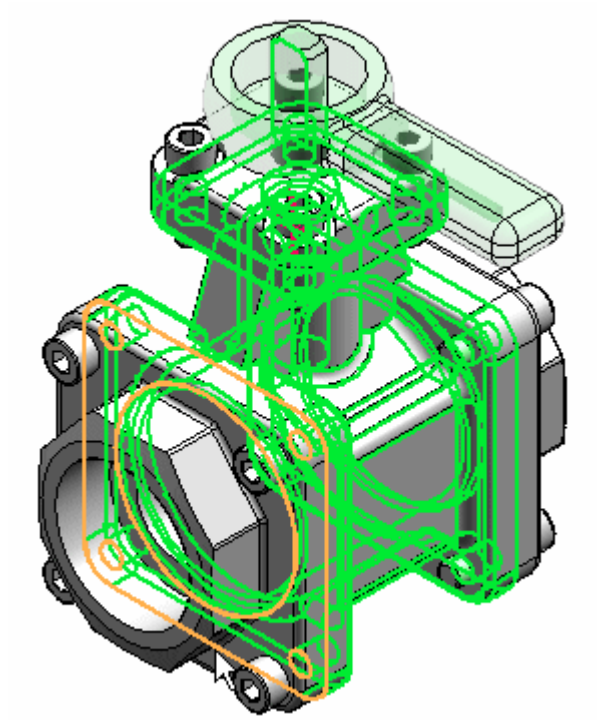

- Type 45° for the rotation angle.

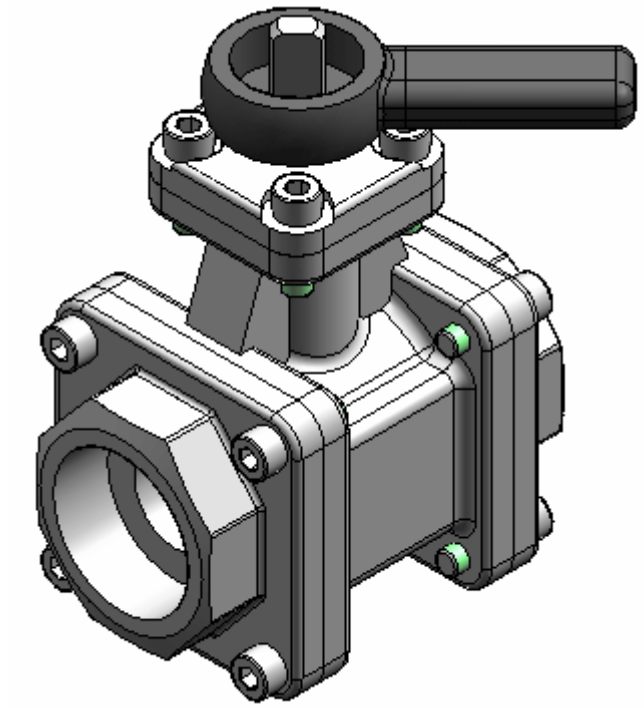

- Change the angle value and watch the handle and ball subassembly rotate.
- Save and close the file. This completes the activity.

Activity Summary

In this activity you learned how to check for interference between parts and subassemblies. You learned how to determine the extent of the interference and make the modifications necessary to correct the interference.