Alternate assemblies

Publication Number
spse01685

Alternate assemblies

Publication Number
spse01685

Proprietary and restricted rights notice

This software and related documentation are proprietary to Siemens Product Lifecycle Management Software Inc.

© 2010 Siemens Product Lifecycle Management Software Inc. All Rights Reserved.

All trademarks belong to their respective holders.

SOLID EDGE
VELOCITY SERIES

...with Synchronous Technology

Contents

Introduction **1-1**

Define Alternate Component Command **2-1**

Activity: Creating an alternate assembly **3-1**

Activity: Creating an alternate assembly **A-1**

Create an alternate assembly for a valve A-1
Modify the Type 1 Closed family member A-3
Create the member Type 2 Open A-7
Observe Results A-12
Finish defining the Type 2 Open member A-13
Create a new family member A-17
Observe results A-22
Create family member named Type 3 Open Reverse Handle. A-23
Draft family of assembly members A-26
Activity summary A-27

Lesson

1 *Introduction*

Welcome to self paced training for Solid Edge. This course is designed to educate you in the use of Solid Edge. The course is self-paced and contains instruction followed by activities.

Solid Edge self-paced courses

- **spse01510**—Sketching
- **spse01515**—Constructing base features
- **spse01520**—Moving and rotating faces
- **spse01525**—Working with face relationships
- **spse01530**—Constructing treatment features
- **spse01535**—Constructing procedural features
- **spse01536**—Modeling synchronous and ordered features
- **spse01540**—Modeling assemblies
- **spse01541**—Explode-Render-Animate
- **spse01545**—Creating detailed drawings
- **spse01546**—Sheet metal design
- **spse01550**—Practicing your skills with projects
- **spse01560**—Modeling a Part Using Surfaces
- **spse01610**—Solid Edge frame design
- **spse01640**—Assembly patterning
- **spse01645**—Assembly systems libraries
- **spse01650**—Working with large assemblies
- **spse01655**—Revising assemblies
- **spse01660**—Assembly reports
- **spse01665**—Replacing parts in an assembly

- **spse01670**—Designing in the context of an assembly
- **spse01675**—Assembly features
- **spse01680**—Inspecting assemblies
- **spse01685**—Alternate assemblies
- **spse01690**—Virtual components in assemblies
- **spse01695**—XpresRoute (tubing)
- **spse01696**—Creating a Wire Harness with Harness Design
- **spse01424**—Working with Solid Edge Embedded Client

Start with the tutorials

Self-paced training begins where tutorials end. Tutorials are the quickest way for you to become familiar with the basics of using Solid Edge. If you do not have any experience with Solid Edge, please start by working through the tutorials for basic part modeling and editing before starting this self-paced training.

Lesson

2 *Define Alternate Component Command*

Defines a list of documents which are related to the selected part or subassembly. Alternate components are typically similar in nature, and can be based on documents that were created independently. Defining a list of alternate components makes it easier to find and select valid components when replacing parts in an assembly.

A simple example of an application for an alternate component group is where there are several versions of a part that have different finishing details. The parts can be independently created or members of a family of parts.

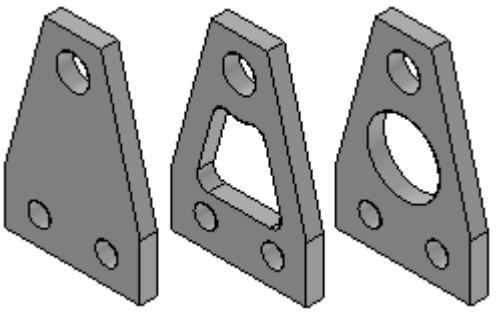

In an assembly where one of the parts is used, you can use the Define Alternate Components command to specify that all three parts are members of the same alternate component group.

Note

Note: A special symbol is used in Assembly PathFinder to indicate that an assembly component is part of a alternate component group.

You can then use the Replace command to replace the part with one of the alternate component members. When you select a part to replace that is a member of a alternate component group, the Alternate Member dialog box is displayed so you can select another alternate component member as the replacement part.

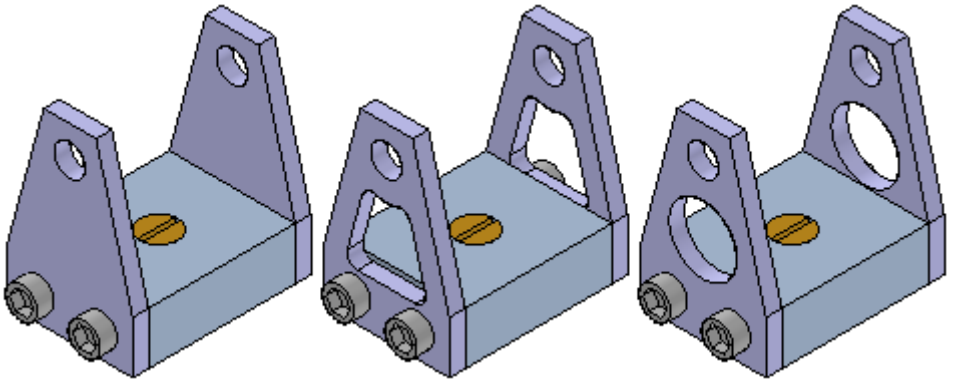

Defining an Alternate Component Group

You can select any part or subassembly in the active assembly to define an alternate component group. When working with a nested assembly, you cannot select individual components that are in a subassembly.

Although an alternate component group would typically contain similar parts, you can define an alternate component group that contains different document types than the original component. For example, you can define an alternate component group that consists of a Part document, a Sheet Metal document, and an Assembly document.

When you select a component in an assembly, then click the Define Alternate Components command, the Define Alternate Components dialog box is displayed so you can browse or search for the documents you want define as alternates for the selected component.

Defining documents as alternate components is a two step process. First, you browse or search for documents that you want to add to the Alternate Candidates list in the left pane of the Define Alternate Components dialog box. Then you can select documents in the Alternate Candidates list and click the Add button to add them to the Alternates List in the right pane of the dialog box.

If the component you select to define the alternate components group is a member of a family of parts or a family of assemblies, all related members from the same master document are added to the Alternate Candidates list automatically.

The assembly document in which you define the alternate components group stores the group member data.

Using Alternate Component Groups

As described earlier, a alternate components group makes it easier to find and select valid components when replacing parts in an assembly. When you select a component to replace in an assembly, and the component is a member of a alternate components group, the Alternate Member dialog box is displayed so you can select another group member as the replacement part.

Note

When you replace an assembly component with an alternate component that is a different document type than the original component, assembly relationships can fail to recompute properly.

If you want to replace the component with a component that is not an alternate components member, you can click the Browse button to display the Replacement Part dialog box to select another component.

If you create alternate component groups that are used frequently in many assemblies, you should consider creating an assembly that contains only the master alternate component and define the alternate components group in this document. This assembly document then becomes the master document for the alternate components group definition.

To place one of the group members in an assembly later, you can place the assembly document instead. If you also set the Disperse This Assembly During Place Part option on the Assembly tab of the Options dialog box for this assembly, when you place the assembly into another assembly, it will be placed as a part that contains the alternate components group data.

This workflow can be useful when you know a part will be replaced later by another part. For example, you may create a prototype version of a part that you know will later be replaced by a production version of the part that will be created independently in a separate document.

Alternate Components and Alternate Assemblies

You can use an alternate component to replace a component in an alternate assembly that is a family of assemblies, but not an alternate position assembly. For example, you can use the Replace command to replace a part in a family of assembly member with an alternate component, rather than use the Exclude Occurrence functionality on the Alternate Assembly tab. Although this approach can be quicker than using the Exclude Occurrence functionality, when you use Revision Manager to copy or move the assembly data set to a new location, any members of the alternate components group that are not used in a family of assembly member will not be included in the data set.

For more information on working with alternate assemblies, see the Alternate Assemblies Help topic.

Comparing Alternate Components and Family of Parts

Alternate Component groups are similar to a family of parts, but provide additional flexibility because you can define an alternate components group using independently created documents and different document types.

Lesson

3 *Activity: Creating an alternate assembly*

Activity guides you through the process creating alternate versions of an assembly.

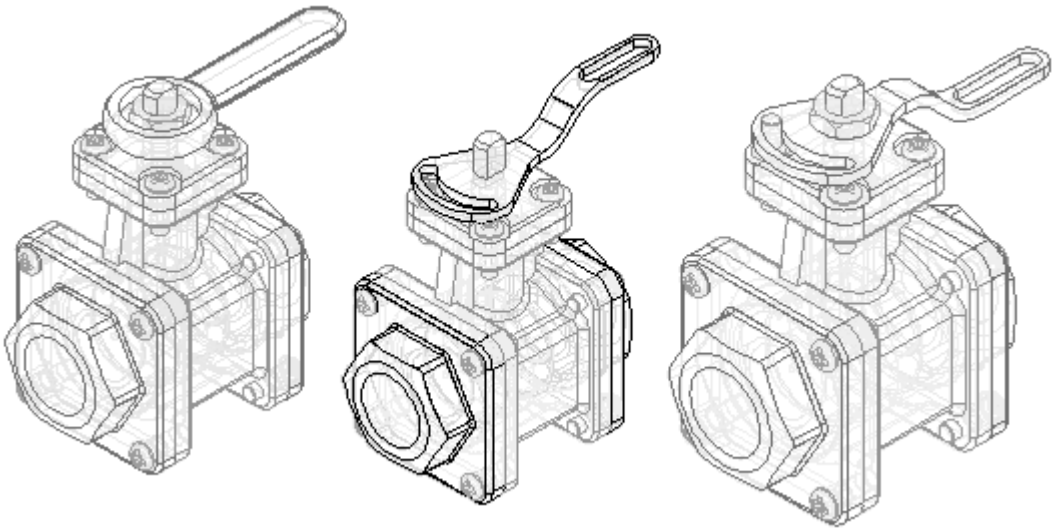

Turn to **Appendix A** for the activity.

A Activity: Creating an alternate assembly

Objectives

When you complete this activity, you will be able to:

- Convert a normal assembly into an alternate assembly.
- Add members to an alternate assembly.
- Define unique variable values for individual members.
- Replace occurrences for a member.
- Exclude occurrences for a member.
- Exclude and reapply assembly relationships for a member.

Create an alternate assembly for a valve

Create an alternate assembly for a valve. The valve in the existing assembly is open. Create an alternate assembly with the valve closed.

- Open *Alternate.asm* located in the folder where you loaded the parts files needed for this activity. Open the assembly with all the parts active.
- On the view tab, click color manager, and ensure the following options are set.
- Set the use individual part styles option.
- Set the show and allow assembly style overrides option.

- Clear the show part face colors option.

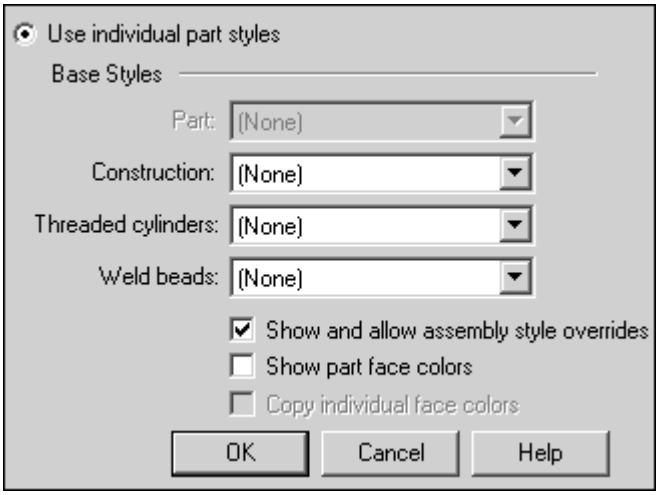

- Click ok.

Note

You create a family of assemblies by converting a normal assembly document into an alternate assemblies document. You can only convert the assembly document once, and you must specify whether you want to convert it into a family of assemblies or an alternate position assembly. In this activity, you will convert the assembly into a family of assemblies.

- In PathFinder, click the alternate assemblies tab.

- On the alternate assemblies tab, click the new button.

- On the alternate assemblies dialog box, do the following:
- Ensure that the create a family of assemblies option is set.
- In the name current member box, type Default Type 1 Open and press the tab key.
- In the name new member box, type Type 1 Closed.

- Click ok.

Note

On the alternate assemblies tab, notice that the Type 1 Closed member is the active member. When you create a new family of assemblies, the name you type in the name new member box becomes the active member.

Modify the Type 1 Closed family member

Modify the Type 1 Closed family member by overriding the value of the angular relationship that controls the position of the valve subassembly and handle. First, add the variable to the member variables list.

- On the alternate assemblies tab, set the member variables option.

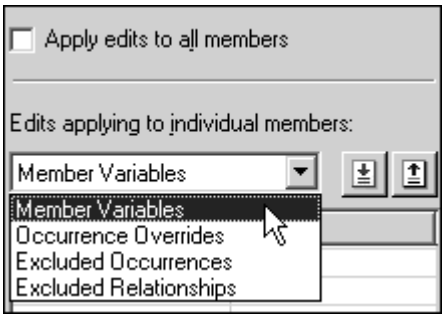

- On the tools tab, click variables to display the variable table. Click the filter button and set the values as shown, then click ok..

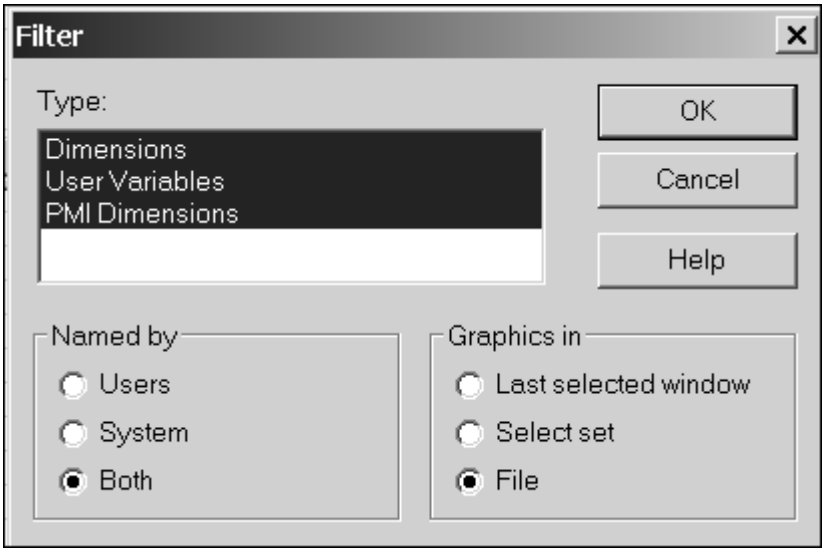

- Click the ValveAngle variable, as shown.

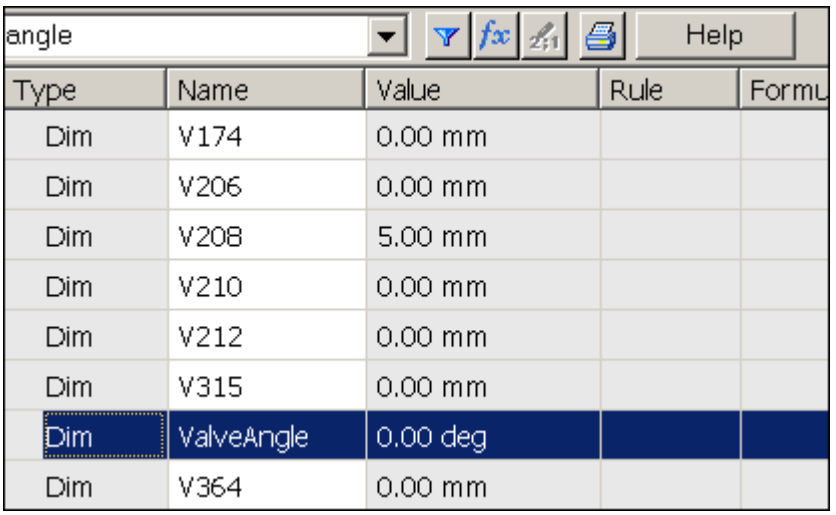

- On the alternate assemblies tab, click the add variables button.

Note

The variable is added to the member variables list. When you add variables to the member variables list, you can no longer edit them within the variable table. You must edit them in the member variables list on the alternate assemblies tab.

- Close the variable table.

- In the member variables list, position the cursor over the variable as shown, but do not click yet.

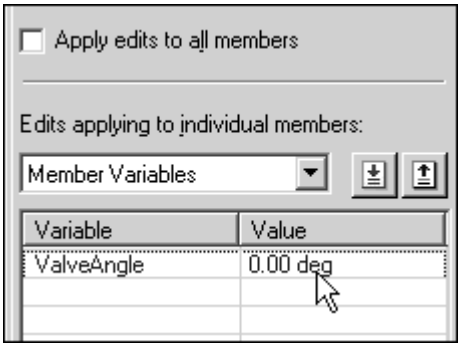

- In the graphic window, notice the faces used to define the angle relationship highlight as shown in the following illustration.

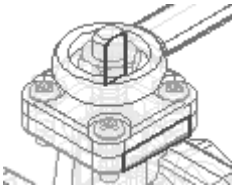

- Position the cursor over the variable value as shown, and then double click the left mouse button.

- Type 90, and then press the enter key.

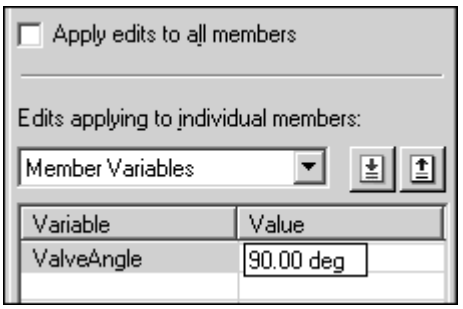

- In the graphic window, notice that the handle rotated 90° clockwise. In addition to the handle, the valve subassembly also rotated.

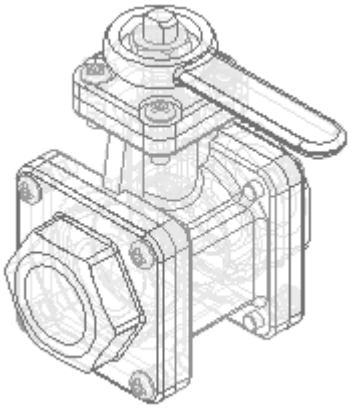

- On the alternate assemblies tab, select the Default Type 1 Open member as shown.

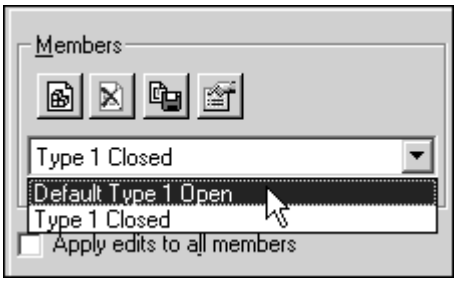

Note

For the Default Type 1 Open member, the ValveAngle variable was also added to the member variables list, but the valve handle is still in the open position. The variable value you changed only affected the Type 1 Closed family member.

When you add a variable to the member variables list for one member, the variable is added to the member variables list for all members that contain the variable, but each member can have a different value assigned to the variable.

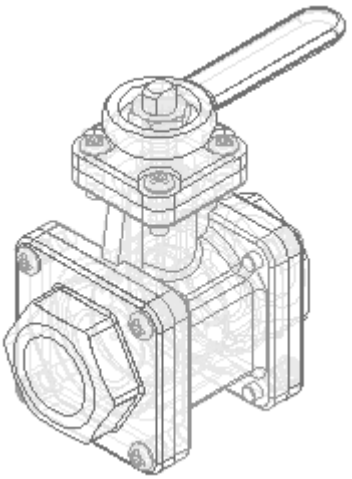

Create the member Type 2 Open

Create another family member, as shown. For this family member, delete the original handle and place a new handle. Use the replace part command to replace the *TopFlange01.asm* subassembly with a different subassembly.

- On the alternate assemblies tab, click the new button.

- On the new member dialog box, type Type 2 Open, and then click ok.

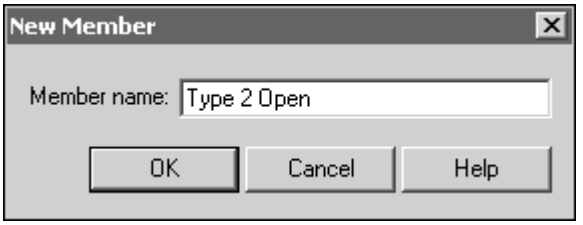

Note

The new family member has the same characteristics as Default Type 1 Open. When you create a new family member, it has the same characteristics as the family member that is active when you create the new member. In this case, the active member was Default Type 1 Open.

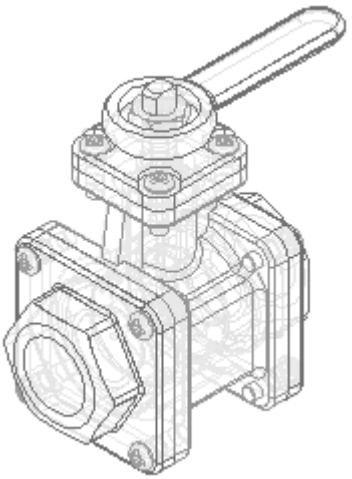

- On the alternate assemblies tab, do the following as shown.
- Set the excluded occurrences option.
- Ensure that the apply edits to all members option is cleared.

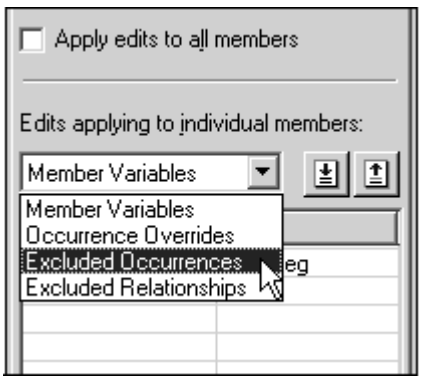

Note

When you exclude occurrences, you can exclude them for all family members or for only the active member. In this case, you want to exclude the handle for only the active member.

When you exclude an occurrence for all family members, the occurrence is physically deleted from the assembly file, and it is not added to the excluded occurrences list.

- Click the Assembly PathFinder tab.

- In Assembly PathFinder, select *Handle01.par* and delete it.

- A dialog box displays to confirm that you want to exclude the part for the active family member.

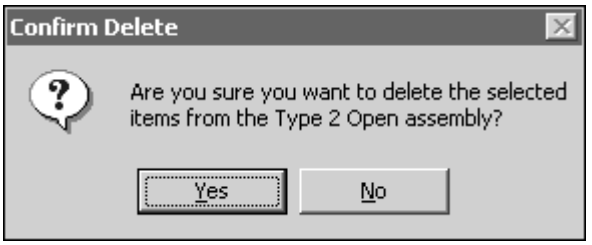

- On the confirm delete dialog box, click yes.

- To make it easier to position the new handle, hide the nut part.

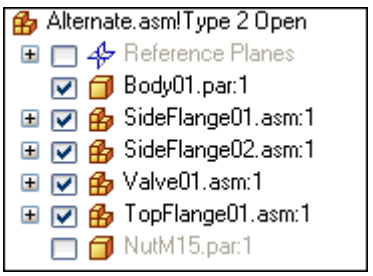

- In PathFinder, click the parts library tab.

- On the parts library tab, click the arrow on the right side of the look in list. Browse to the C:\Assembly folder.
- Drag *Handle02.par* into the assembly window.

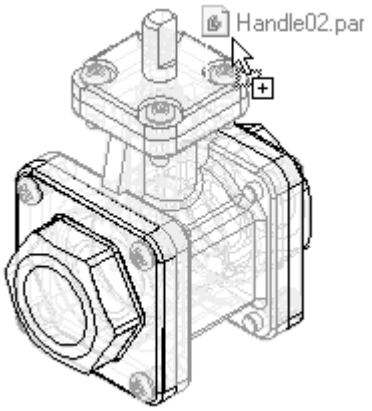

- Position the handle using FlashFit as directed in the following steps.
- Mate the two planar faces shown.

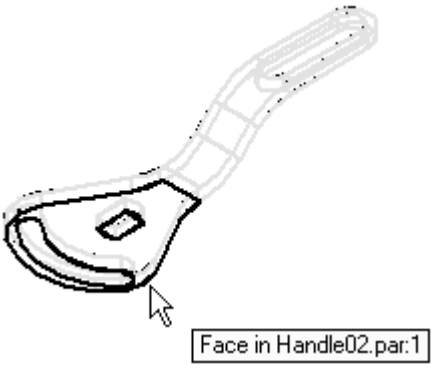

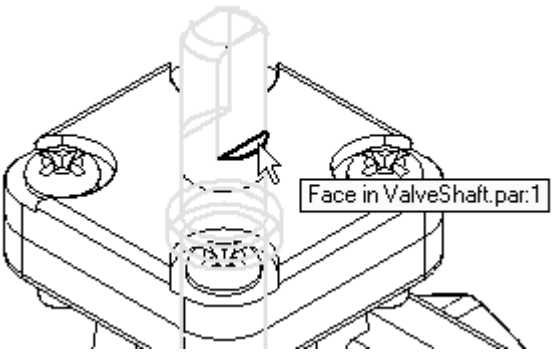

- Axial align the curved faces shown.

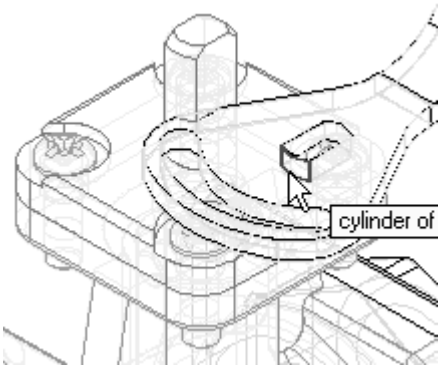

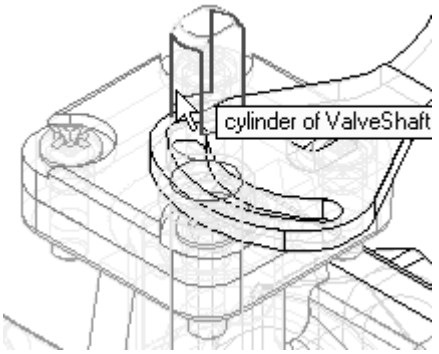

- Mate the two planar faces shown.

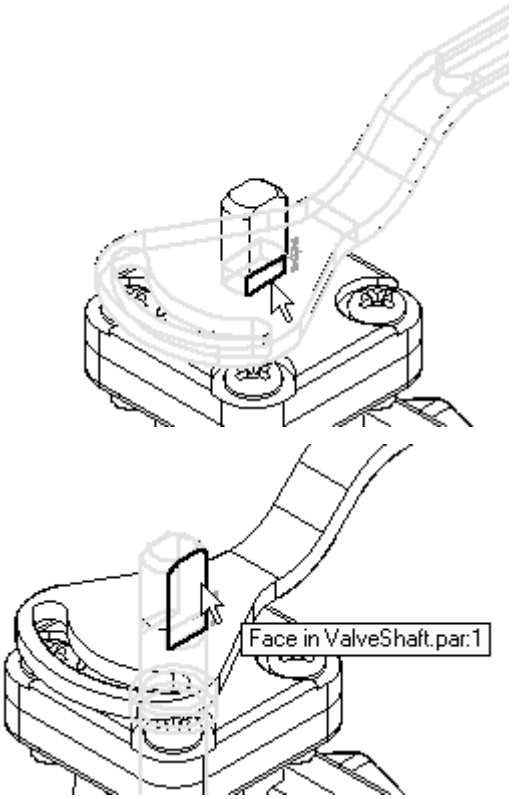

The handle is fully positioned in the assembly.

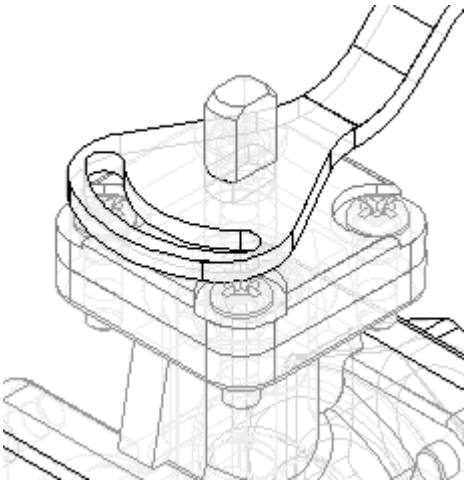

- Save the assembly.

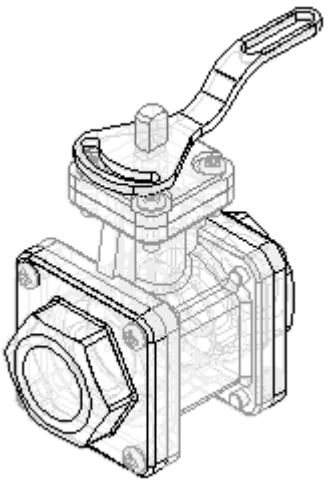

Observe Results

Make some observations of the alternate assemblies created so far.

- In PathFinder, click the alternate assemblies tab.

- In the excluded occurrences list for the Type 2 Open family member, notice that *Handle01.par* has been added to the list.

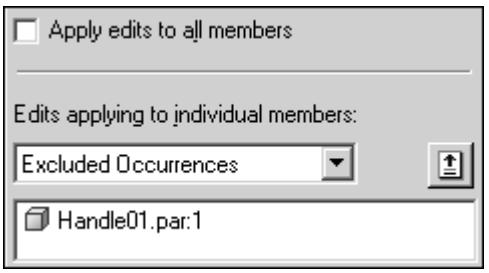

- On the alternate assemblies tab, activate the member named Default Type 1 Open.

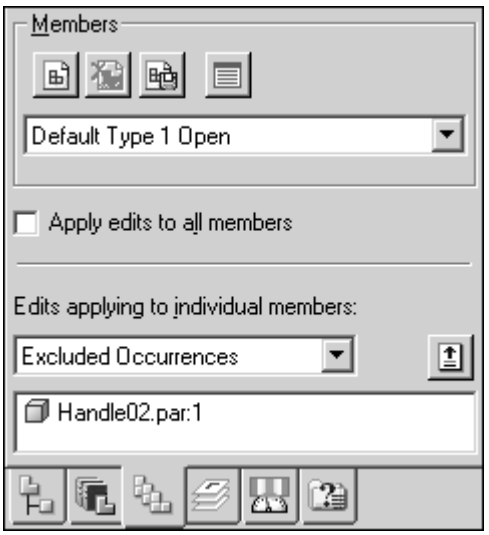

Note

For this family member, *Handle02.par* is in the excluded occurrences list. Also notice that the assembly display updated when you activated this family member.

Finish defining the Type 2 Open member

Finish defining the characteristics for member Type 2 Open by replacing a subassembly.

- On the alternate assemblies tab, activate the member named Type 2 Open.

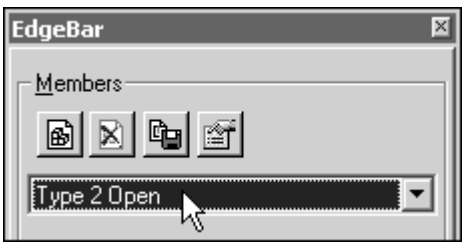

- Click the Assembly PathFinder tab.
- Click the home tab. In the modify group, click the replace part command.

Note

You can use the replace part command to replace a part or subassembly within the assembly. When replacing a subassembly, you must select it within Assembly PathFinder.

- In Assembly PathFinder, select the entry *TopFlange01.asm*.

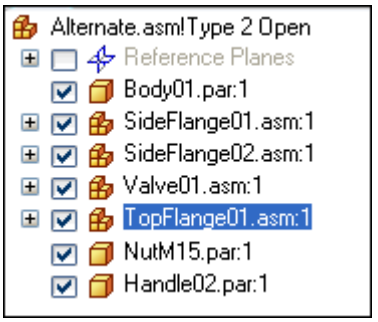

- On the replacement part dialog box, do the following:
- Set the look in location to the C:\Assembly folder.
- Set the files of type option to assembly files (*.asm).
- Select the assembly file *TopFlange02.asm*.

- Click the open button.

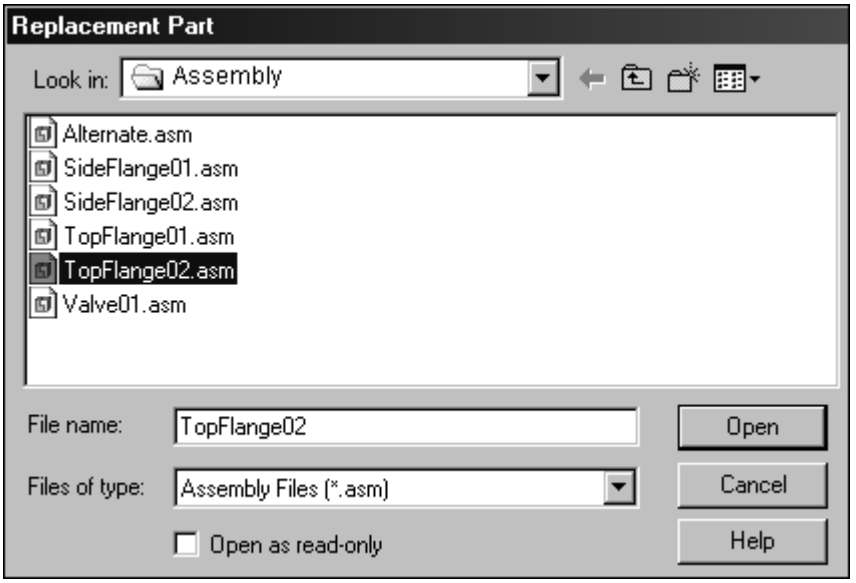

Note

Since the replacement subassembly is also a family of assemblies, you must specify which family member you want to use as the replacement.

- On the assembly member dialog box, select the member named 3 screws with stud, and then click ok.

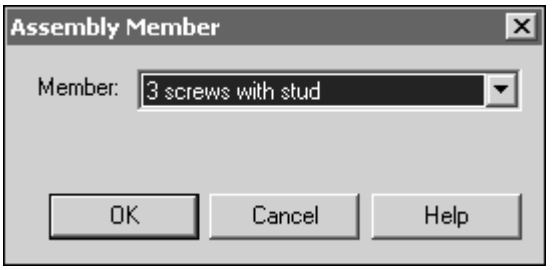

Note

In the assembly window, notice the replacement subassembly does not have four Phillips-head screws. In place of one of the screws is a stud that serves to limit the rotation of the new handle. Also notice in Assembly PathFinder, the member name is appended to the filename.

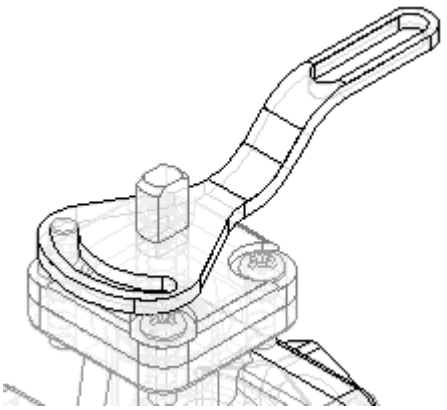

- In PathFinder, click the alternate assemblies tab.

- On the alternate assemblies tab, set the occurrence overrides option.

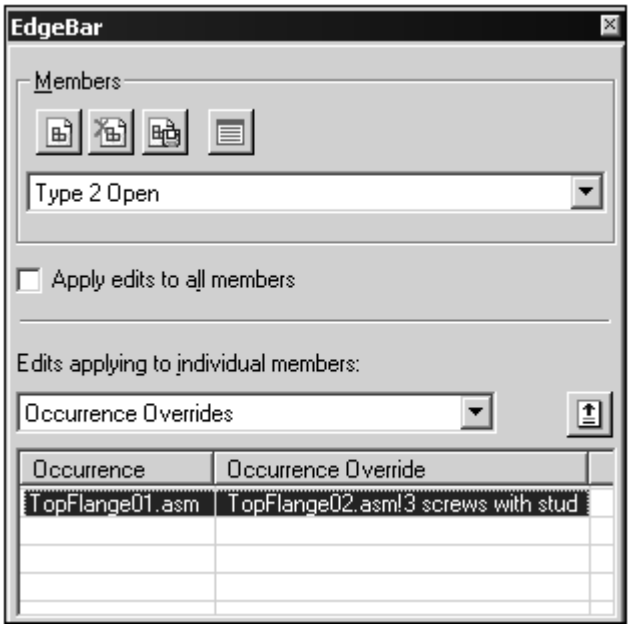

Note

Notice for this member that *TopFlange01.asm* was overridden by *TopFlange02.asm!3* screws with stud.

When you replace a part or subassembly, the original occurrence is added to the left column in the occurrence overrides list, and the replacement occurrence is added to the right column in the occurrence overrides list.

Create a new family member

Create another family member as shown. For this family member, change the position of *Handle02.par*. This family member will illustrate how you can exclude relationships for a part. Excluding relationships for a part allows you to add new relationships that change the position of the part.

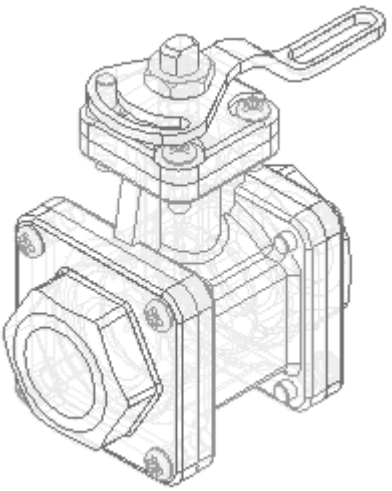

- On the alternate assemblies tab, click the new button.

- On the new member dialog box, type: Type 3 Open Reverse Handle, and then click ok.

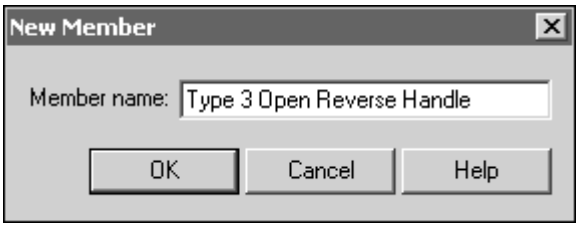

Note

The new member you created is active, and it has the characteristics of the Type 2 Open member.

- On the alternate assemblies tab, do the following as shown.
- Set the excluded relationships option.
- Ensure that the apply edits To all members option is cleared.

Note

When you exclude relationships, you can exclude them for all family members or for only the active member. In this case, you want to exclude the relationships for only the active member.

- Click the Assembly PathFinder tab.

- In the top pane of Assembly PathFinder, select *Handle02.par* as shown.

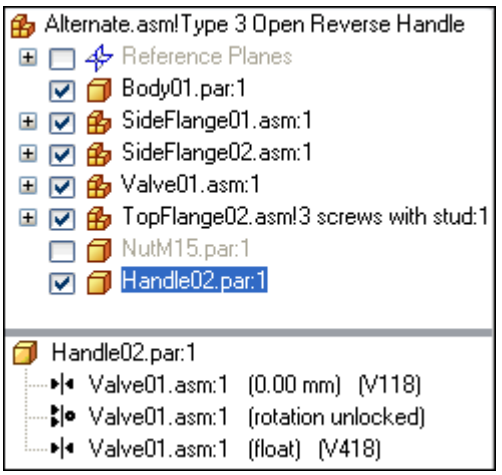

- In the bottom pane of Assembly PathFinder, delete the two relationships shown.

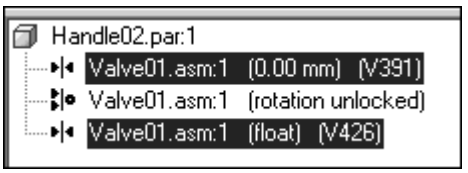

Note

Notice that the symbol adjacent to *Handle02.par* changes to indicate it is no longer fully positioned.

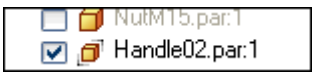

- In PathFinder, click the alternate assemblies tab.

Note

Notice that the relationships you excluded were added to the excluded relationships list for the family member named Type 3 Open Reverse Handle.

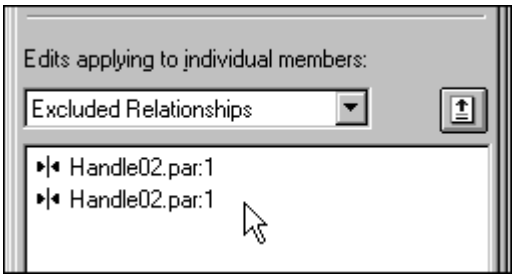

- Click the Assembly PathFinder tab.

- In the top pane of Assembly PathFinder, select *Handle02.par*.
- In the command bar, click the edit definition button.

- Establish a mate relationship between the faces shown.

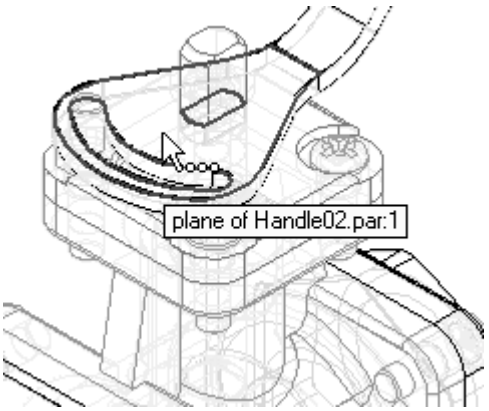

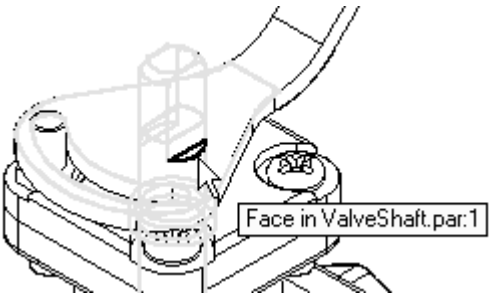

- The handle is mated to the shaft as shown.

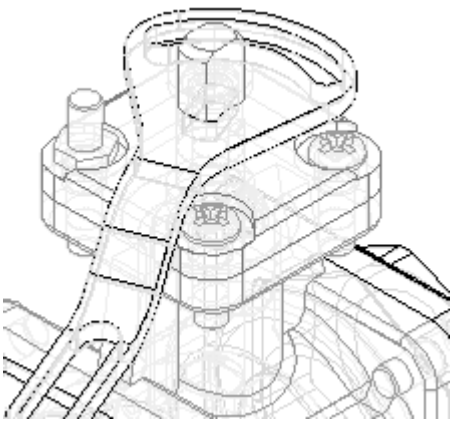

- Continue using FlashFit to mate the faces shown.

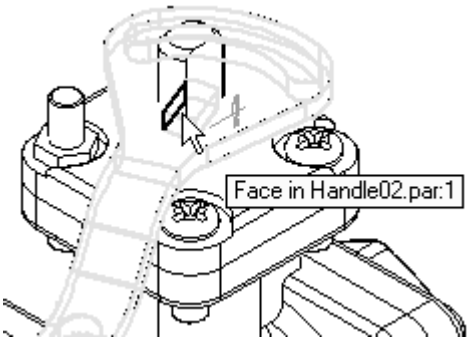

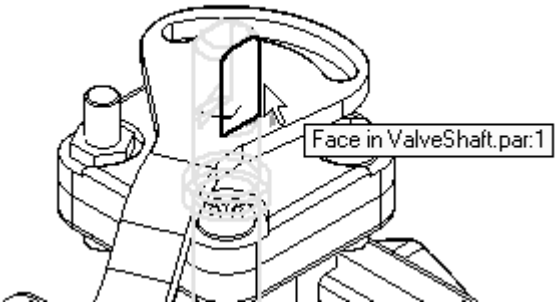

- Click the floating offset button.

Note

This setting allows the faces to take on whatever offset value is appropriate to satisfy the other relationships that position the two parts.

The handle is fully positioned in the assembly.

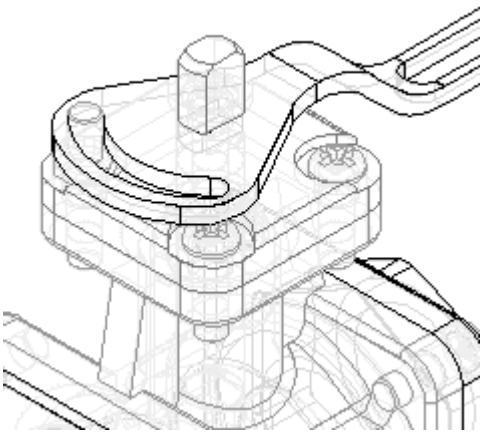

- Fit the assembly and then save the assembly.

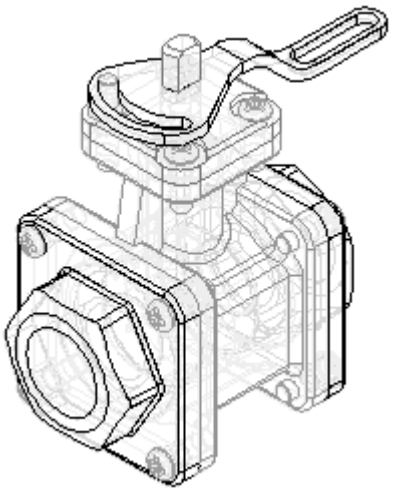

- In Assembly PathFinder, show *NutM15.par*.

Observe results

Make some observations of the alternate assemblies created so far.

- In PathFinder, click the alternate assemblies tab.

- On the alternate assemblies tab, activate the member named Type 2 Open.

  Note

  There are two relationships on the excluded relationships list for this family member. These relationships were added to the list automatically when you repositioned the handle for the member named Type 3 Open Reverse Handle. When the apply edits to all members option is cleared, the relationships you add to position a part for one member are automatically excluded from the other members that contain the same part.

  Also notice that for this member, *NutM15.par* is still hidden. When you change the display of a part for one family member, the display of the same part in other family members is not changed.

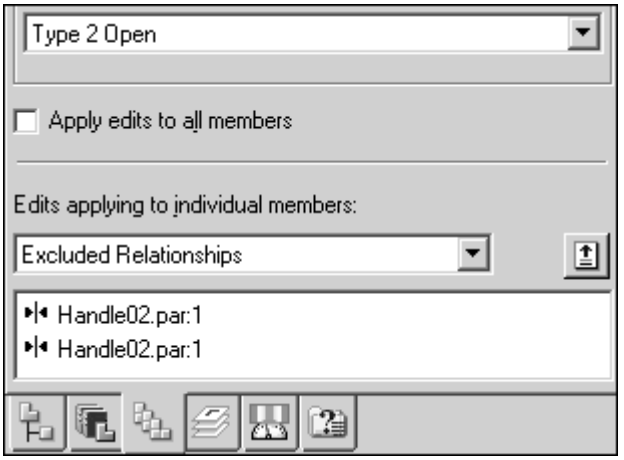

Create family member named Type 3 Open Reverse Handle.

Create a new assembly document for the family member named Type 3 Open Reverse Handle.

- On the alternate assemblies tab, activate the member named Type 3 Open Reverse Handle.

- On the alternate assemblies tab, click the save member as button.

- On the save member dialog box, save the active member (using the default name) to the C:\Assembly folder.

  If a dialog box displays and asks if you want to save the current assembly first, click the yes button.

  Note

  Remember the name and location, because you will be opening this document in the next step.

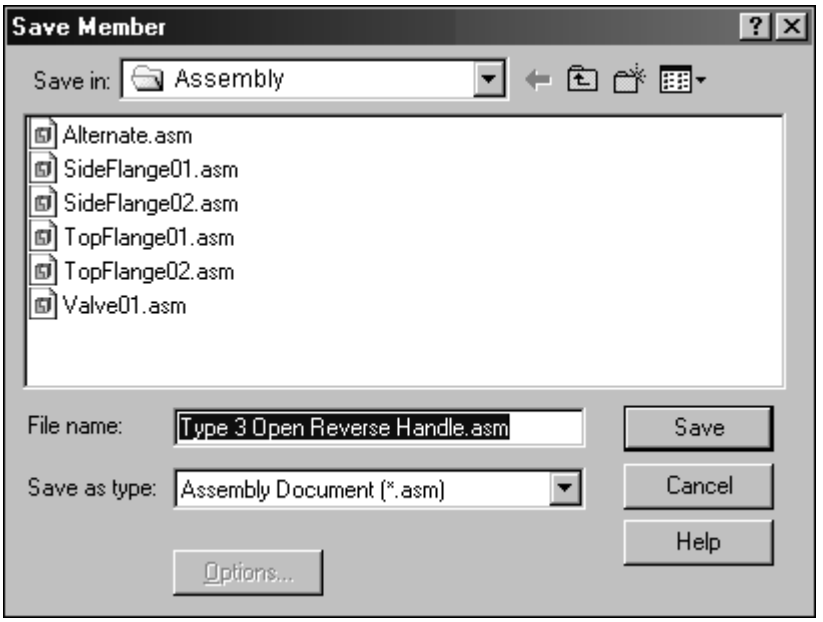

- Click the applications button. Click the open button.

- On the open file dialog box, go to the location where you saved the new file, and then open it with all the parts active.

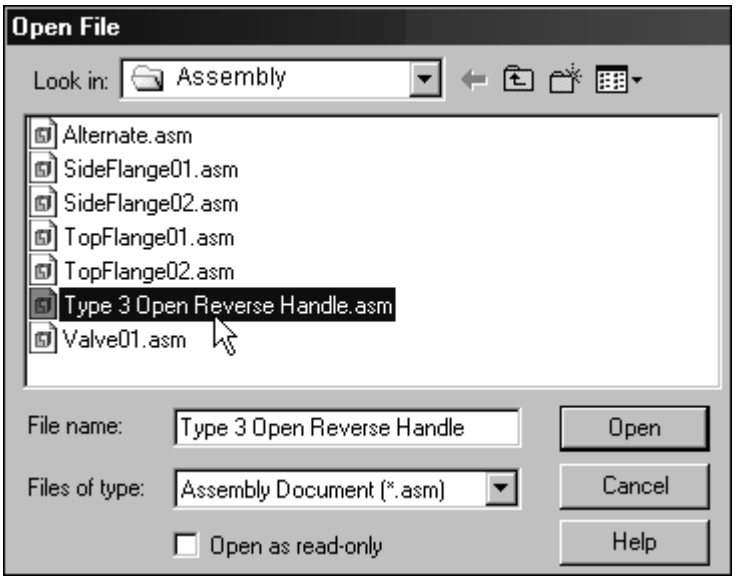

Note

For the new assembly no family members are listed on the alternate assembly tab.

When you save a family member as a separate assembly, it is saved as a normal assembly document. Saving family members as separate assembly documents is useful because some downstream applications do not recognize assembly documents that have been converted to alternate assemblies. For example, simply motion only allows you to open normal assembly documents.

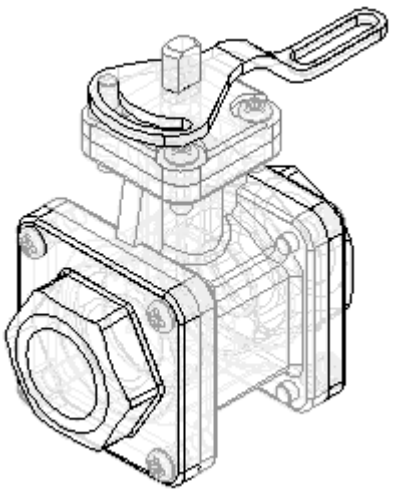

- Save the assembly.
- Close and save both assembly documents.

Draft family of assembly members

Create a new draft document and place a drawing view of one of the family of assembly members.

- Click the application button. Click the new button.
- On the new dialog box, and click *iso draft.dft* , then click ok.

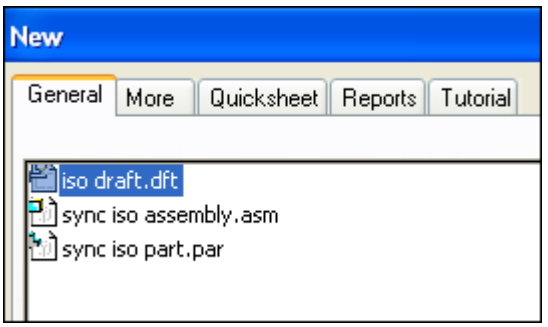

- On the drawing views toolbar, click the drawing view wizard button.

- On the select model dialog box, select *Alternate.asm*, and then click open.

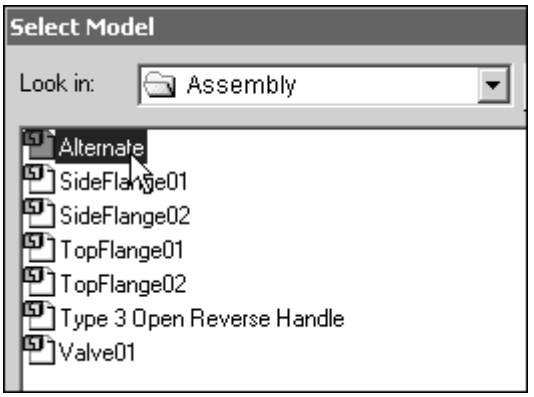

- The select family of assembly member page of the drawing view wizard displays, so you can specify which family member you want. In the family member list, select the Type 3 Open Reverse Handle option, and then click the next button.

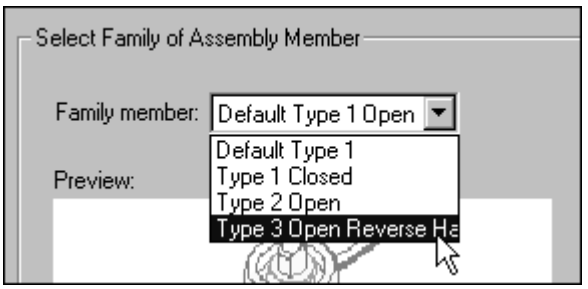

- On the assembly drawing view options page, click the Next button.

- On the drawing view orientation page, select the ISO option, and then click finish.

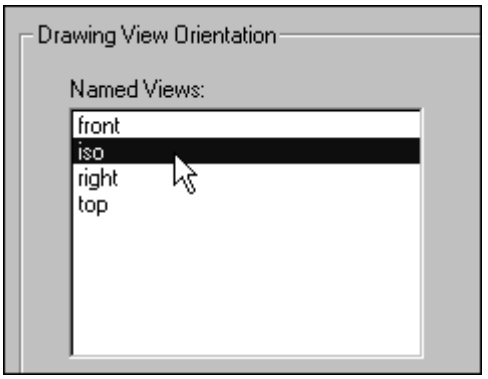

- Position the drawing view on the drawing sheet, and then click to place the drawing view.

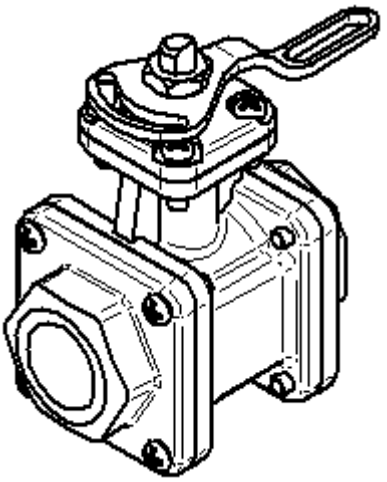

- Save and close the draft document. This completes the activity.

Activity summary

In this activity you learned how to create an alternate assembly. In the alternate assembly, you learned how to add new members, define unique variables for individual members, exclude member occurrences and reapply assembly relationships for a member.