Lesson

1 Structural frame design workflow

Structural frame design overview

You can create path segments and structural frames using the Frame Design application in an assembly document. Frame Design displays additional, specialized commands for creating 2D and 3D path segments, and for specifying the 3D frame component type you want to apply to the path segments. This makes it easy to construct components that use standard structural shapes, such as square tubes, angles, and channels.

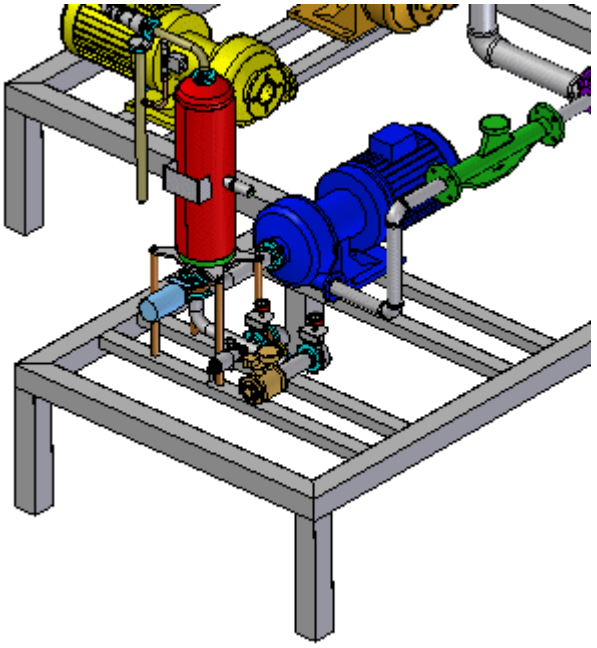

Frame design workflow

1. **Start the Frame Design application.**

   Choose the Tools tab® Environs group® Frame Design command  .

2. **Create the 2D framework.**

   Create the entire 2D framework for the 3D frame model by doing the following:

a. Use the commands in the Home tab® Segments group to define fully associative linear, curved, or bent segment paths for the frame cross section to follow.

b. Use the OrientXpres tool to add the 3D connection points to the segments.

- When drawing line or arc segments, use OrientXpres to lock the orientation of the segment parallel to an axis or plane.

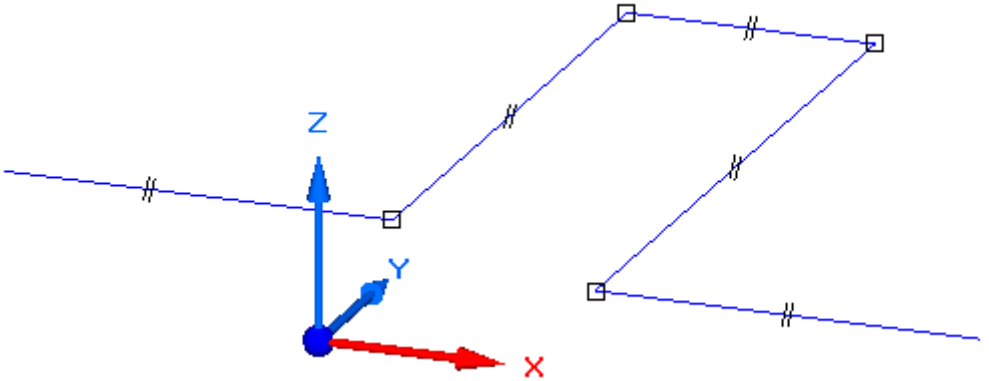

- The framework can be a combination of sketches (the blue lines) and 3D line segments (the red lines). Use sketches when the frame is planar. Use edges and other geometry from 3D parts in the assembly.

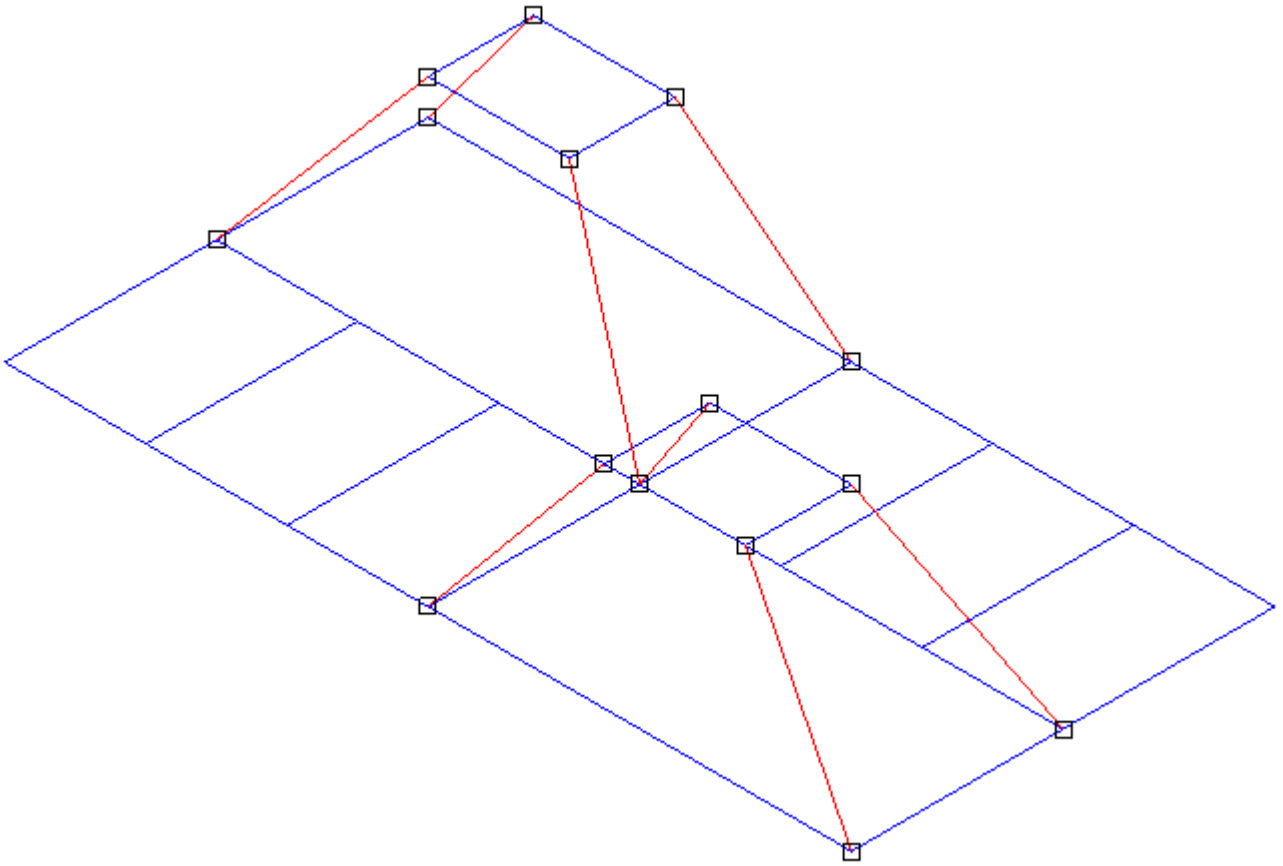

3. **After the framework design is complete, build the 3D frame.**

Use the Home tab® Frame group® Frame command to place frames that follow the sketch and 3D line segment paths.

The Frame command bar is displayed for you to do the following:

a. Choose path segments from the 2D framework.

b. Select cross sections to apply to those segments to create the 3D frame.

c. Specify corner treatment (end condition) options: Miter, Butt1, Butt2, or None.

d. Open the Frame Options dialog box to apply a radius, coping, and other options.

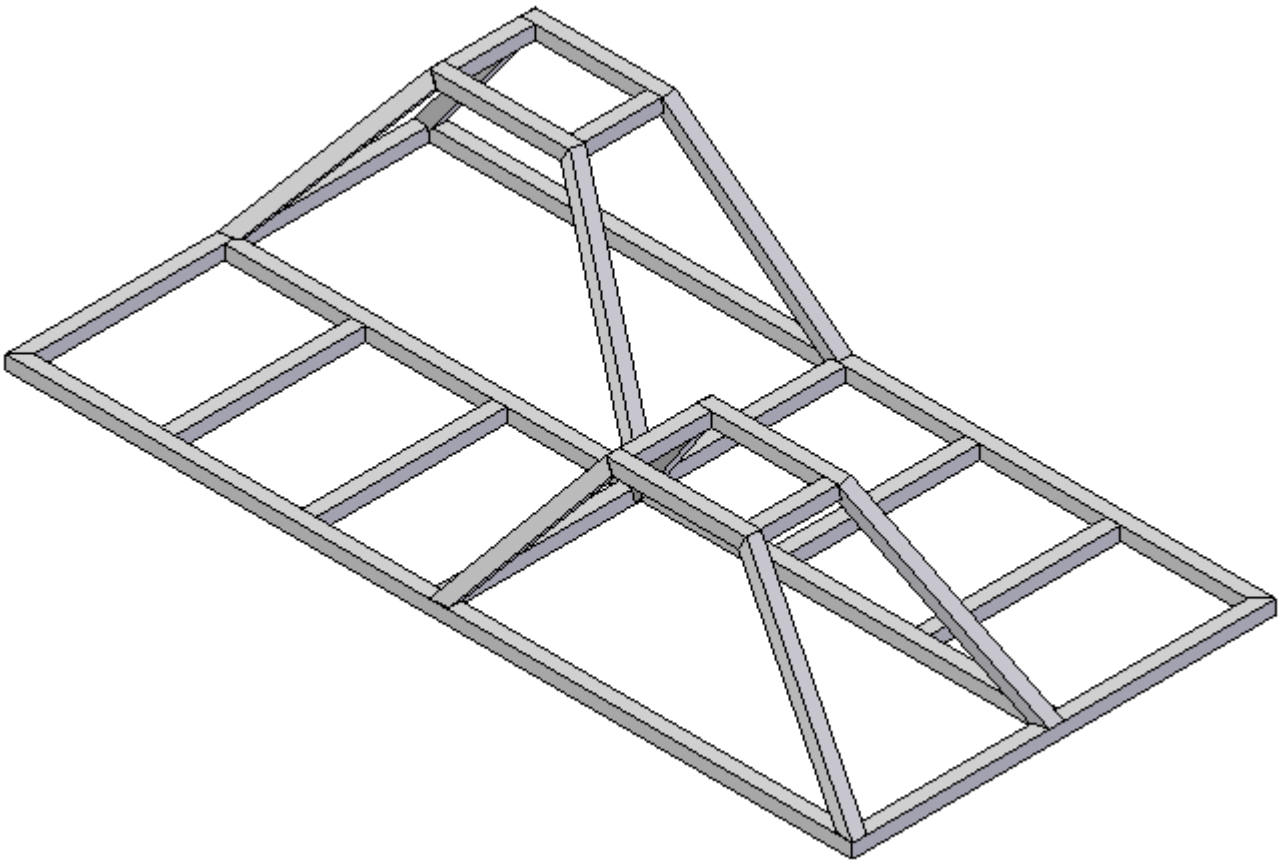

- **Frame component cross section options**

  To specify the frame component type and size, you can select a cross section from the list on the command bar, or browse the standard library components.

  You can add your own custom components to the library using *FrameComponentsUtility.exe*.

Note

To learn how to create and use custom frame components using *FrameComponentsUtility.exe*, see the self-paced training module, Creating custom frame components, in the Solid Edge Frame Design course (spse01610).

- **End condition (corner treatment) options**

  The Butt1 end condition option trims against the shortest member (removes material from the longest member to suit). Butt2 trims against the longest member.

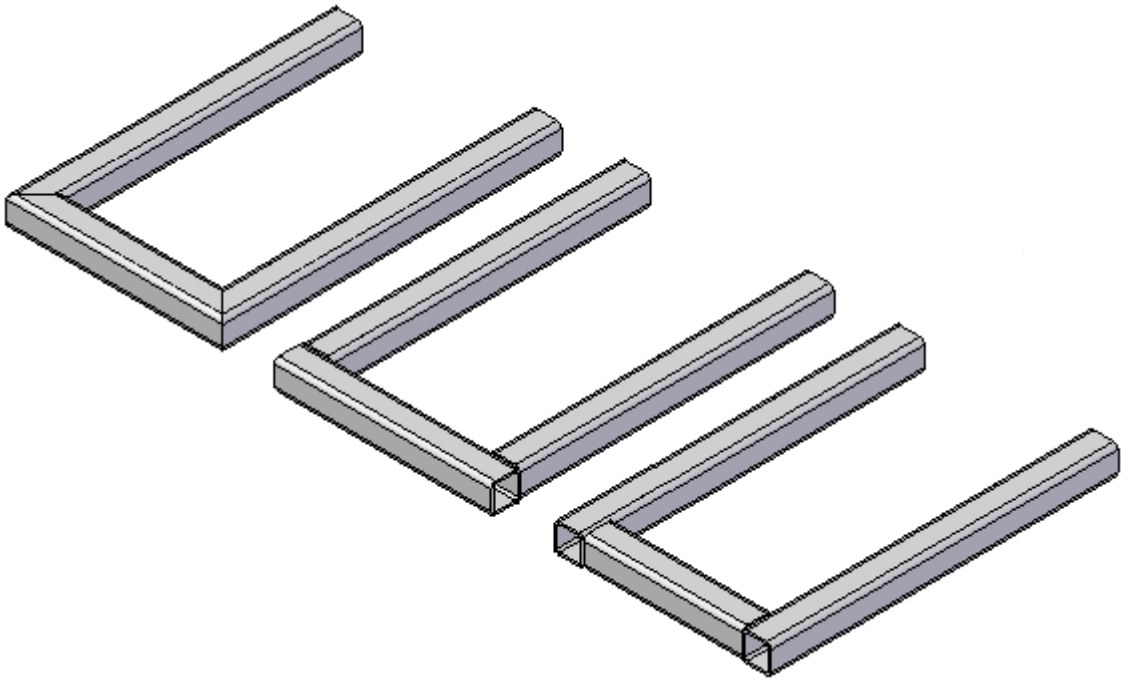

4. **Modify a structural frame.**

   Adjust the frame component cross sections or frame end conditions for the set of components you created.

   After edits are made, the system immediately recomputes the frame to show the changes.

   To learn how, see Help topic Modify a structural frame.

5. **Return to the Assembly environment.**

   Use the Home tab® Close group® Close Frame button to exit the structural frame design application.

6. **Produce a structural frame drawing.**

   See Help topic Create a drawing with the Create Drawing command to create and automatically place an isometric drawing view of the model.

7. **Create a cut lengths parts list and automatically add balloons.**

To learn how, see the Help topic, Create a total length parts list. Refer to the Tips section to generate a cut length list (1) instead of a total length list.

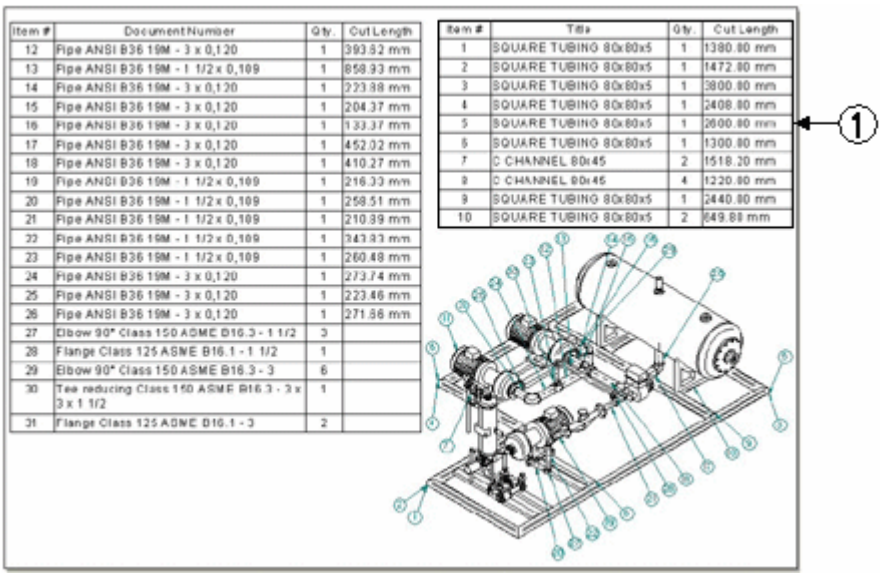

Item #	Document Number	Qty.	Cut Length
12	Pipe ANSI B36 19M - 3 x 0,120	1	393.52 mm
13	Pipe ANSI B36 19M - 1 1/2 x 0,109	1	858.93 mm
14	Pipe ANSI B36 19M - 3 x 0,120	1	223.88 mm
15	Pipe ANSI B36 19M - 3 x 0,120	1	204.37 mm
16	Pipe ANSI B36 19M - 3 x 0,120	1	133.37 mm
17	Pipe ANSI B36 19M - 3 x 0,120	1	452.02 mm
18	Pipe ANSI B36 19M - 3 x 0,120	1	410.27 mm
19	Pipe ANSI B36 19M - 1 1/2 x 0,109	1	216.33 mm
20	Pipe ANSI B36 19M - 1 1/2 x 0,109	1	258.51 mm
21	Pipe ANSI B36 19M - 1 1/2 x 0,109	1	210.39 mm
22	Pipe ANSI B36 19M - 1 1/2 x 0,109	1	343.93 mm
23	Pipe ANSI B36 19M - 1 1/2 x 0,109	1	260.48 mm
24	Pipe ANSI B36 19M - 3 x 0,120	1	273.74 mm
25	Pipe ANSI B36 19M - 3 x 0,120	1	223.46 mm
26	Pipe ANSI B36 19M - 3 x 0,120	1	271.56 mm
27	Elbow 90° Class 150 ASME B16.3 - 1 1/2	3	
28	Flange Class 125 ASME B16.1 - 1 1/2	1	
29	Elbow 90° Class 150 ASME B16.3 - 3	6	
30	Tee reducing Class 150 ASME B16.3 - 3 x 3 x 1 1/2	1	
31	Flange Class 125 ASME B16.1 - 3	2	

Item #	Title	Qty.	Cut Length
1	SQUARE TUBING 80x80x5	1	1380.80 mm
2	SQUARE TUBING 80x80x5	1	1472.80 mm
3	SQUARE TUBING 80x80x5	1	3800.80 mm
4	SQUARE TUBING 80x80x5	1	2408.80 mm
5	SQUARE TUBING 80x80x5	1	2600.80 mm
6	SQUARE TUBING 80x80x5	1	1300.80 mm
7	C CHANNEL 80x45	2	1518.20 mm
8	C CHANNEL 80x45	4	1220.80 mm
9	SQUARE TUBING 80x80x5	1	2440.80 mm
10	SQUARE TUBING 80x80x5	2	649.80 mm

- **Cut lengths parts lists**

  Cut length can be synchronized with Teamcenter. The value appears as a Note in Product Structure Editor.

- **Rough-cut sizing**

  You can use the Frame Rough-cut End Clearance option on the Options page (Parts List Properties dialog box) to specify an amount that the system automatically adds to the exact length of each frame.

8. **(Optional) Add weld features to the frame design.**

   You can Create a weldment assembly from your frame model, which displays weldment-specific commands. You can then add surface preparation features, define weld-bead features and weld characteristics, and add final, post-weld features.

   For more information, see Help topic Weldments in assemblies.

Lesson

2 *Starting the frames application*

The Frames application is only available from within the Assembly environment.

Procedure for entering and exiting the Frames application

Step 1: Open a new assembly file.

Step 2: To start the Frames application, on the Tools tab, in the Environs group, choose Frame Design .

Step 3: The tools needed to create paths that define the framework are located in the Home tab, Segments group (1). In the Frame group (2), the Frame command creates frames once the framework design is complete.

Step 4: To exit the Frames application, click the Close Frame command in the Close group.

Lesson

3 *Creating the framework*

- Create the entire framework for the frame unit before creating frames.
- The framework can be a combination of sketches and 3D line segments.
- Use sketches when the frame is planar.
- Use edges and other geometry from 3D parts in the assembly.

The framework model below contains sketch elements (blue) and 3D line segments (red).

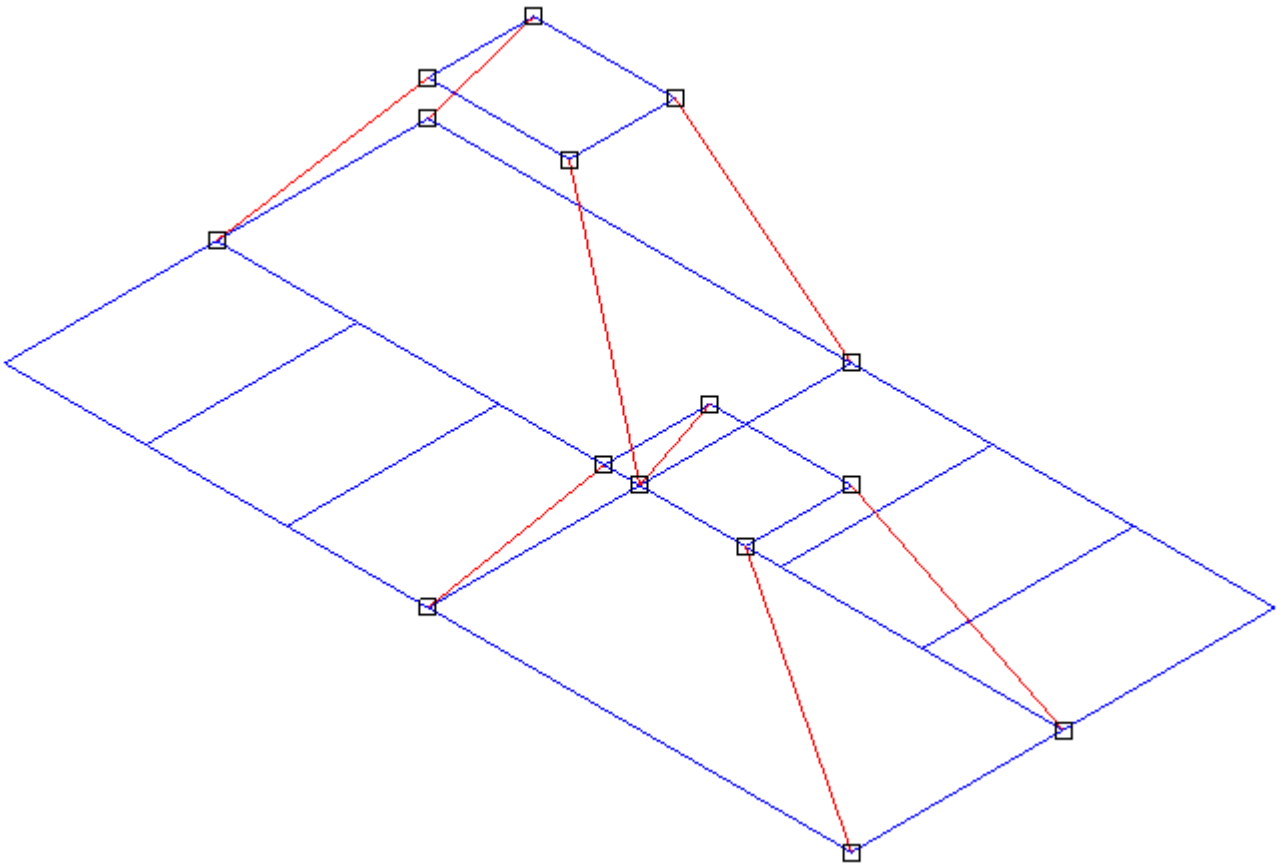

The image below shows square cross sectional frames applied to the framework.

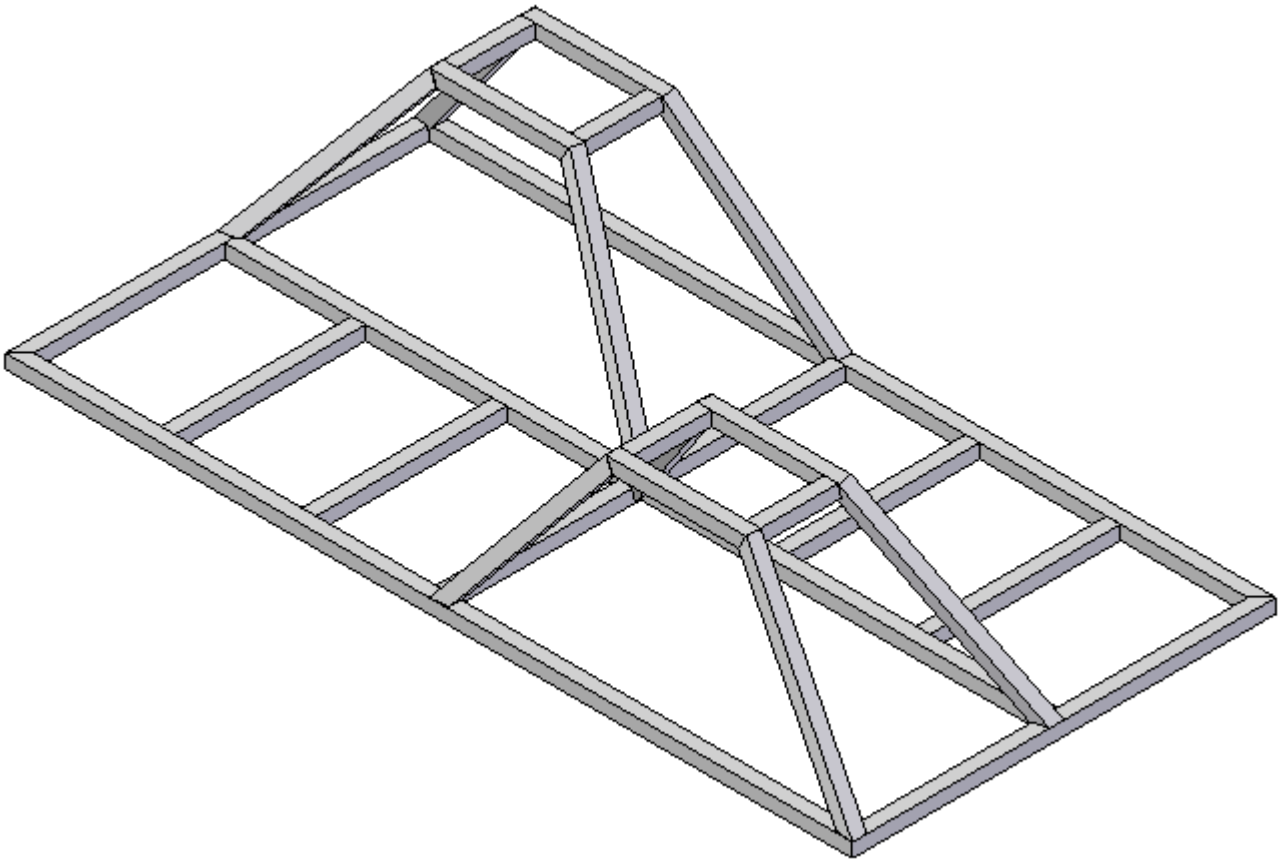

Creating 3D segments

Use the Line Segment command in the Segments group to create 3D paths. Create line segments in 3D space without having to define a plane to draw on. Use OrientXpres to control the endpoints of the line segments.

OrientXpres tool

The OrientXpres tool is an interactive design aid for drawing lines, arcs, and curves in 3D space, and for editing the position of bluedots in 3D space. OrientXpres is displayed automatically when creating or editing elements which require its capabilities. For example, OrientXpres is displayed when drawing line segments in the XpresRoute and Frame applications, and when editing bluedots in the Part and Sheet Metal environments.

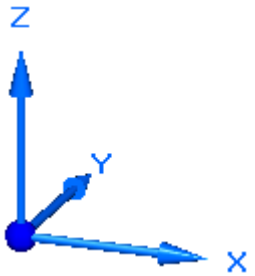

When working in 3D space, you often need to restrict the placement or movement of elements to be parallel to a particular axis or plane. The OrientXpres tool provides that capability. You can do the following using OrientXpres:

- To restrict movement parallel to an axis, select one of the three axes (X, Y, or Z). You can also cycle through the axes by typing Z key on the keyboard.

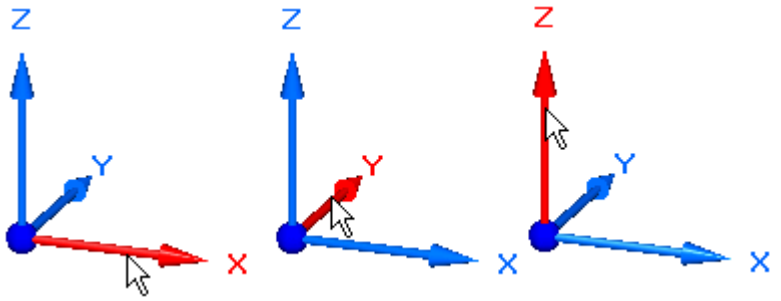

- To restrict movement parallel to a plane, select one of the three planes (XY, YZ, or XZ). You can also cycle through the planes by typing X key on the keyboard.

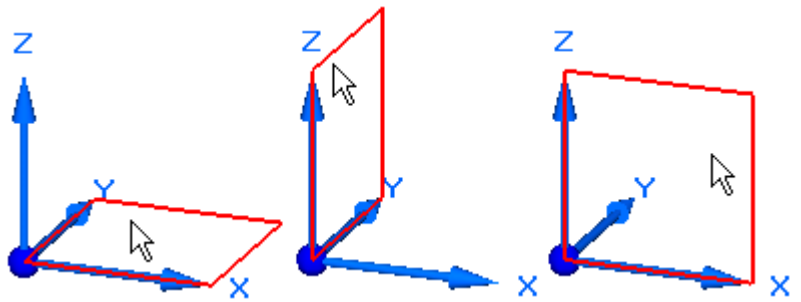

- To move the OrientXpres tool to a more convenient location, select the origin, and drag it to a new location.

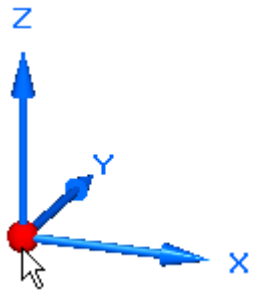

- You can type C key on the keyboard to clear any locks to planes or axes.

3D connect points

3D line segments connect to sketch elements at the locations shown. Sketch lines have connect points at endpoints (1,3) and midpoint (2). Arcs have only a center point connection (4).

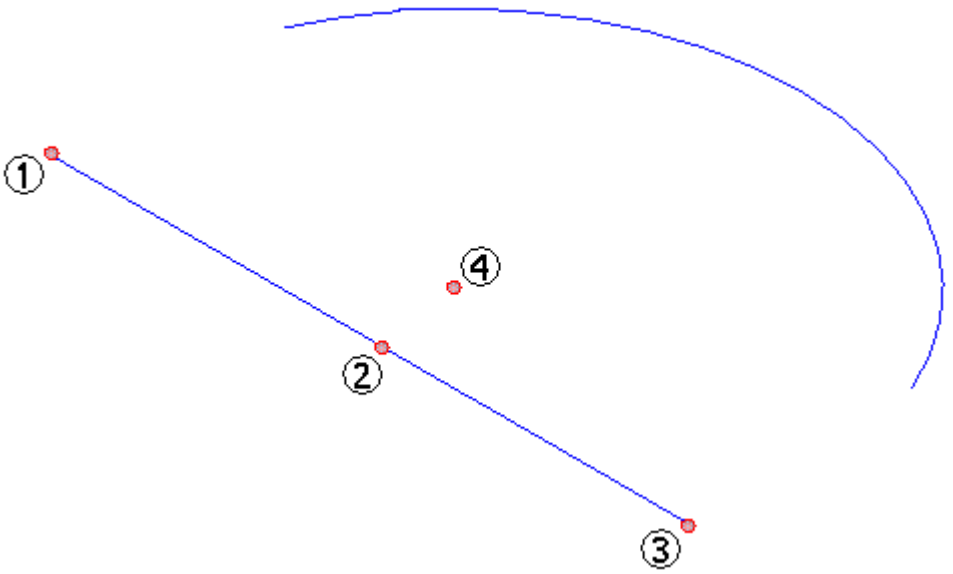

Activity: Using OrientXpres

Overview

- This activity guides you through the steps to create 3D line segments using the OrientXpres tool.
- You are provided a file that contains two sketches (blue).
- You will create 3D line segments (black) connected to the sketch elements (blue).

Turn to **Appendix A** for this activity.

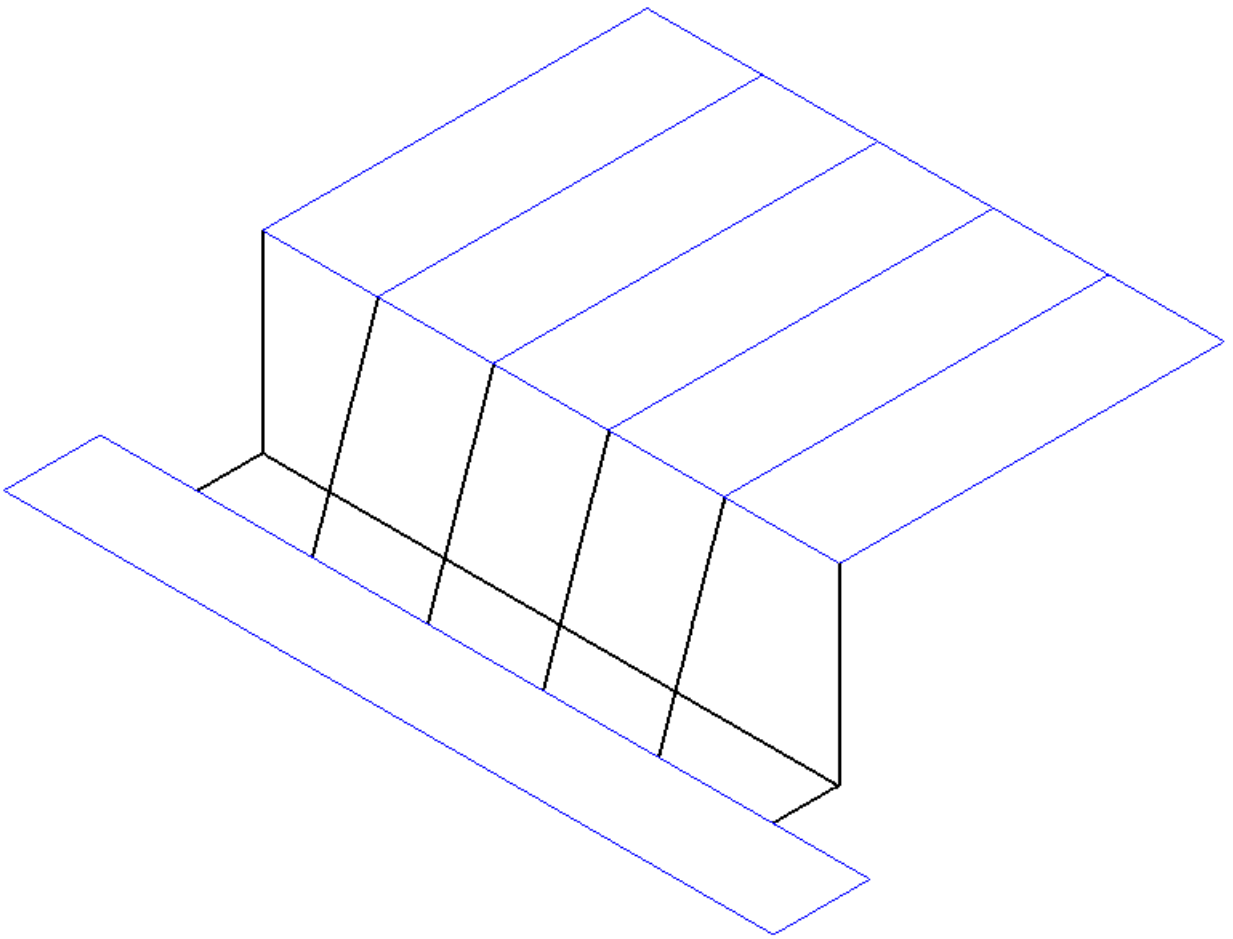

Lesson

4 Placing frames

After the framework design is complete, create frames that follow the sketch and 3D line segment paths.

To create frames, choose the Frames command  in the Frame group.

Frame options

To display the Frame options, click the Options button on the Frame command bar.

Corner treatment options

Apply corner treatment

Apply radius

Extend frame component

No corner treatment

Apply corner treatment

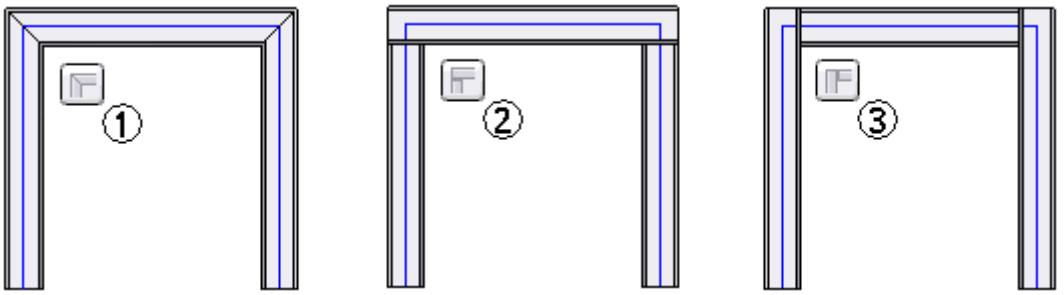

(1) Miter

A miter cut is applied to corner(s).

(2) Butt1

Material is removed from the longest member.

(3) Butt2

Material is removed from the shortest member.

Apply radius

A fillet is applied at the corner(s).

The result is a single frame spanning the selected planar segments.

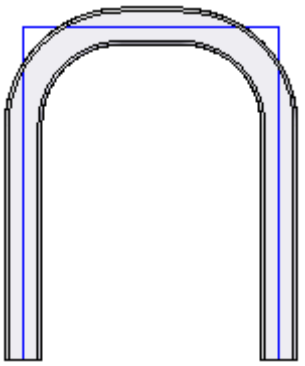

Extend frame component

Each frame added is extended by a specified (+/-) length.

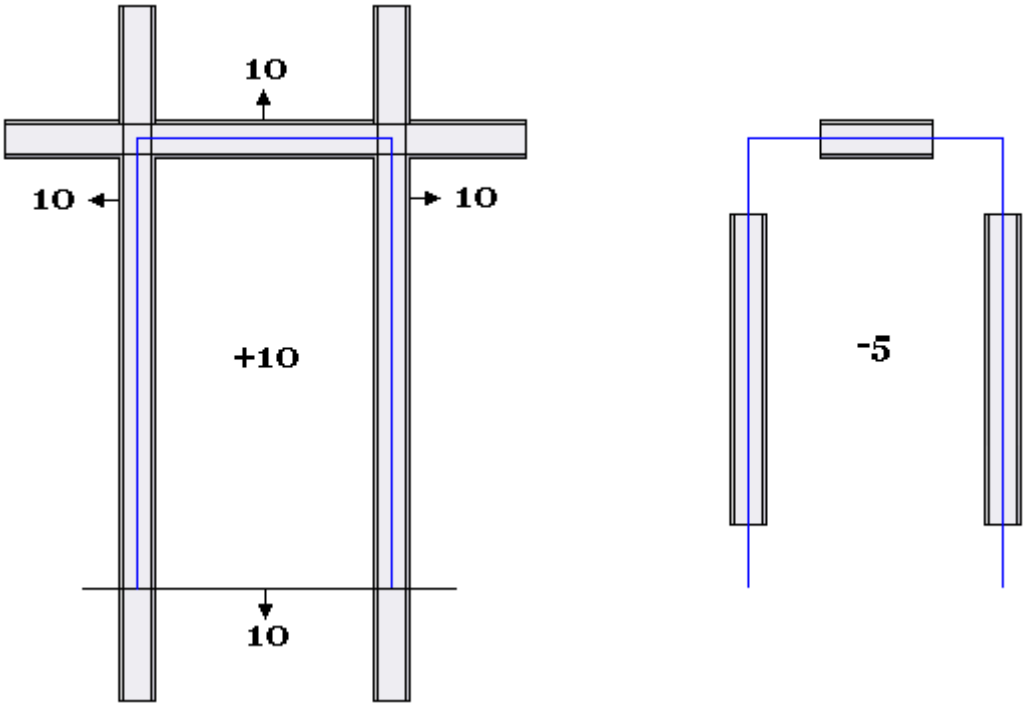

No corner treatment

No frames are trimmed. Each frame is the length of the path element.

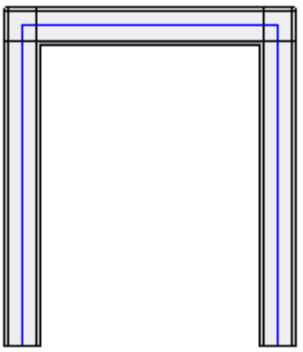

Frame component location

Frames components are stored in unmanaged and managed locations.

- browse for an unmanaged frame component
- select a managed frame component from the Standard Parts Library

Click the folder icon  on the Frame command bar to browse for a frame component.

The default folder is controlled from the Applications button® Solid Edge Options® File Locations tab.

To change the default frame folder location, select **Frame Local Library Folder** and then click Modify.

Browse for component

Store frame components in a common location accessible to all company frame designers.

Solid Edge delivers a sample set of frame components.

The sample frame components are found in the **Program Files\Solid Edge ST3\Frames** folder.

Frame component samples

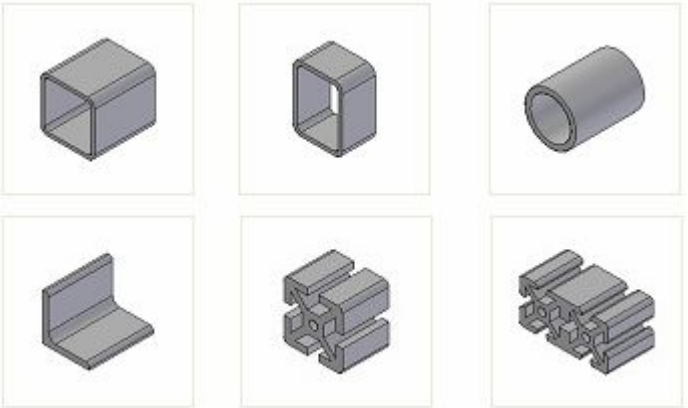

Frame files dialog

- When using a sample frame component, the Frame Files dialog informs that the frame component will be removed when Solid Edge is uninstalled.
- If a frame component is moved, renamed or deleted, a File Load Failure dialog displays when opening an assembly file which uses that frame component.

Frames ribbon bar

- Choose the Frame command and the Frame command bar appears.
- The Frame Options dialog displays where you can accept or change the active settings.
- The automatic display of the dialog can be turned off.
- The dialog can be shown at any time by clicking the Options button on the command bar.

Select path step

- The Frame Options button is available at all times within the Frame command.
- The first step in the Frame command is the Select Path Step.
- While in the Path Selection Step, browse for a frame component or select a component from the Recently Used Component list.
- You have the option to select single path elements or to select a chain of path elements.
- When the path elements are selected, click the Frame Accept button. Deselect the selected path elements by clicking the Frame Deselect button.
- The frames are placed after accepting the paths.
- Click Finish to end the Frame component placement step.

Note

The Frame command remains active to continue placing frames.

Modify cross sections step

The Frame command bar changes when editing a frame definition. The Modify Cross Sections step becomes active.

The Modify Cross Sections step allows you to:

- specify the angular orientation of the cross section
- define handle points at which the cross section lies on the path 
- select a new component to define the cross section for the frame 

Modify end conditions

The Frame command bar changes when editing a frame definition. The Modify End Conditions step becomes active.

Change the end condition to a:

- miter (1)
- butt1 (2)
- butt2 (3)
- none (4)

When the end condition is changed to None (4), the command bar changes to provide additional end conditions.

- fillet (5)
- extend (6)
- remove end condition (7)

Placing frames on colinear paths

Selecting colinear path segments results in a single frame spanning the length of the colinear paths. This is important to know when paths cross.

The image below shows an example with four lines. Line segments 1,2 are colinear and line segments 3,4 are colinear.

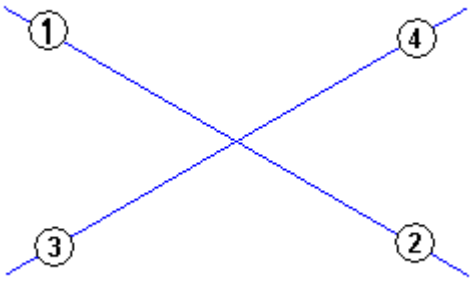

When selecting all four lines in the path step, the result is shown below. A frame set with two frames is created and notice that the two frames occupy the same space at the intersection.

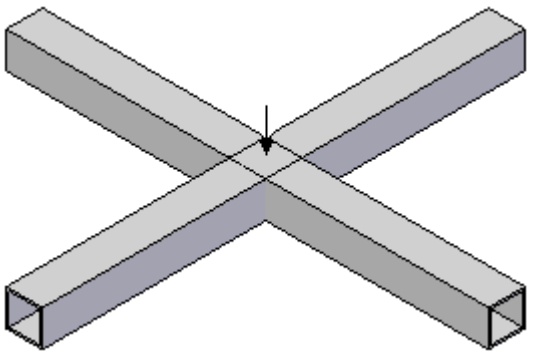

You get the same result by selecting lines 1,2 to create a frame and then selecting 3,4 to create another frame.

The correct process would be to determine which colinear paths make up the frame that will span the entire length. Create a frame that spans the entire colinear length. Create a single frame for each segment that butts up to the frame that spans the entire length.

In the example below, a single frame was created with lines 1,2. A single frame was created with line 3 and then a single frame was created with line 4.

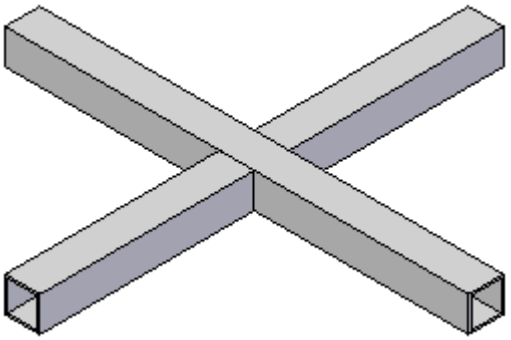

An activity demonstrating this process is covered in the Coping Joints Lesson

Activity: Corner treatment options

Overview

In this activity, you will use each of the corner treatment options to observe the results.

Turn to **Appendix B** for this activity.

Activity: Dune buggy frame

Overview

In this activity, you will create a dune buggy frame. The paths are already defined. All of the paths are 3D lines and arcs. You will use a round tubing component. The handle point for the round component cross section is the centerpoint. Round cross sections usually produce the desired results at initial placement. No frame repositioning is needed.

Turn to **Appendix C** for this activity.

Lesson

5 *Automatic frame component positioning*

The automatic frame component positioning option is used when adding a vertical frame component (1) whose path vertex is connected to the path vertices of an existing 90° frame corner (2). Frame (1) repositions to where the outside faces are coplanar to the (2) components. When auto-positioning is on for (1), any repositioning of the 90° frame corner components will cause the vertical component (1) to automatically reposition. If (1) has auto-positioning turned off, it will not move from its default placement position when the 90° frame corner components are repositioned.

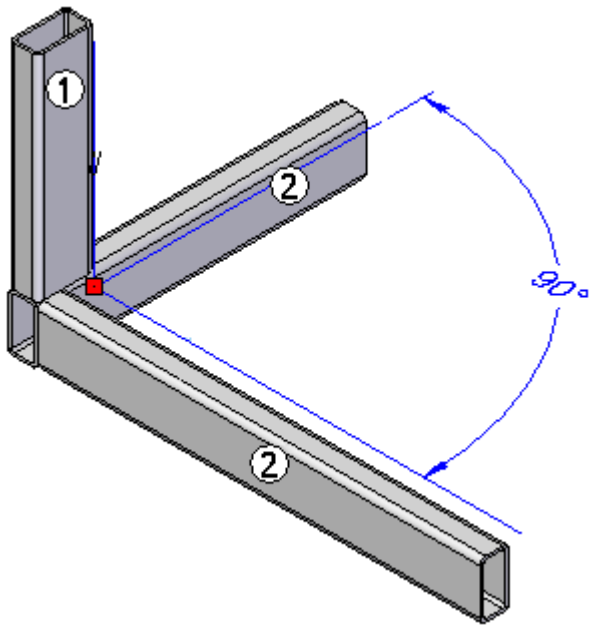

If (1)'s position is directly modified, auto-positioning will no longer work. The frame must be deleted and then recreated with auto-positioning turned on.

Notice in the Frame Options dialog that the **Automatic frame component positioning** option is on by default.

Activity: Automatic frame positioning

Overview

In this activity, you will create frames and observe the auto-positioning behavior.

Turn to **Appendix D** for this activity.

Lesson

6 *Editing frames*

Edit a frame definition during creation or after the frame command is finished.

Edit frame paths, position, end conditions and component type.

PathFinder

In PathFinder, notice Frame Components collector (1). Whenever you create frames you will get a Frame Components collector. Control the display of all frame components by right-clicking (1) and then by clicking Show/Hide.

All frames created in a single operation are grouped as a Frame set (2). Turn on/off the display of the frame group.

Each frame in the group is a part file (3) with the filename of the frame component used. Turn on/off the display of any part in the group.

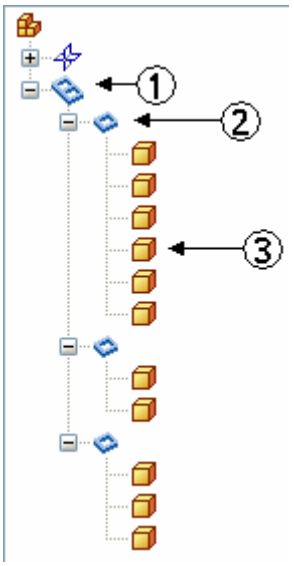

Edit definition process

To edit a frame:

Step 1: Click the Select tool  .

Step 2: In PathFinder, click the Frame group to edit.

Step 3: Two methods of selecting the Edit Definition command are available.

(**Method 1**) Right-click on the Frame set or a member of the frame set in PathFinder and then click Edit Definition.

(**Method 2**) Right-click on the frame in the assembly window and then click Edit Definition.

Editing frame paths

Add or remove paths from the frame definition.

To edit a path definition:

Step 1: Within the Edit Definition command, click the Select Path Step.

Step 2: To add a path segment, select the path(s). The selected path(s) highlights along with the other paths in the frame path definition.

Step 3: Click the Accept button or right-click to complete the path step.

Step 4: To remove a path segment, press the Ctrl key and select the path(s). The selected path(s) no longer highlights.

Step 5: Click the Accept button or right-click to complete the path step.

Note

You can add and remove path segments in the same step.

Editing frame position

A frame is positioned on a path by a snap point. The default snap point is defined during the creation of the frame component cross section.

Rectangular frame component example

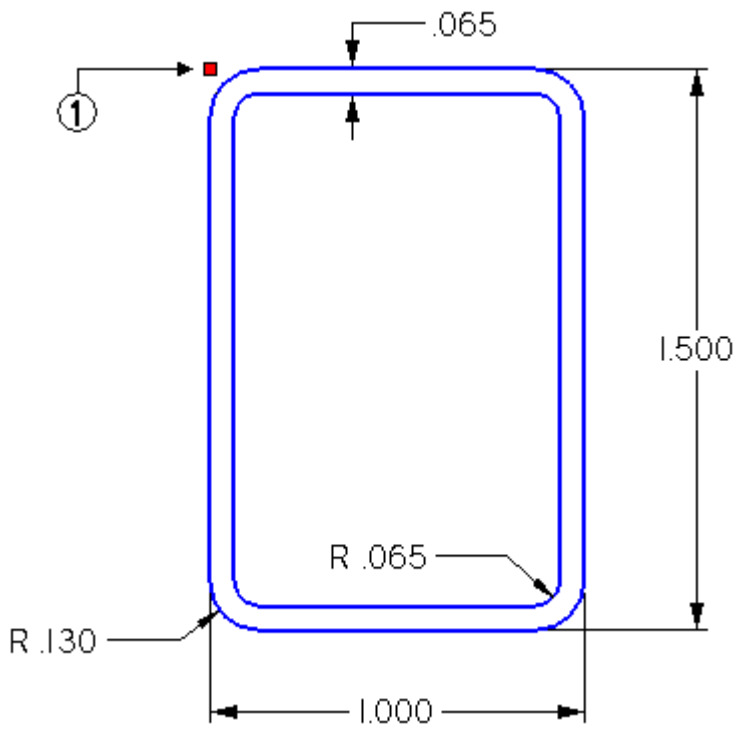

(1) Default “snap” point

To edit a frame(s) position

Step 1: Select a frame group or a single frame within a frame group.

Step 2: Right-click and click the Edit Definition command.

Step 3: Click the Modify Cross Sections step.

Step 4: If a frame group is selected, all frame cross sections in the group highlight. To position all highlighted cross sections simultaneously, click the Accept button. If only a single cross section from a selected frame group needs positioning, click the Deselect button and then select the cross section to position. Click the Accept button.

Step 5: Choose positioning method (hot key, snap point or angular rotation).

Positioning frames with hot keys

Hot keys are available to shift/rotate selected frame sections. All positioning is restricted to the cross section plane.

Pressing the **n** key rotates the cross section in 90° increments.

Pressing the **f** key flips the cross section (rotate 180°). You can also choose the Flip command on the command bar.

- shifts upward

¯ shifts downward

¬ shifts to left

® shifts to right

Note

All shifting via arrow keys is relative to the screen.

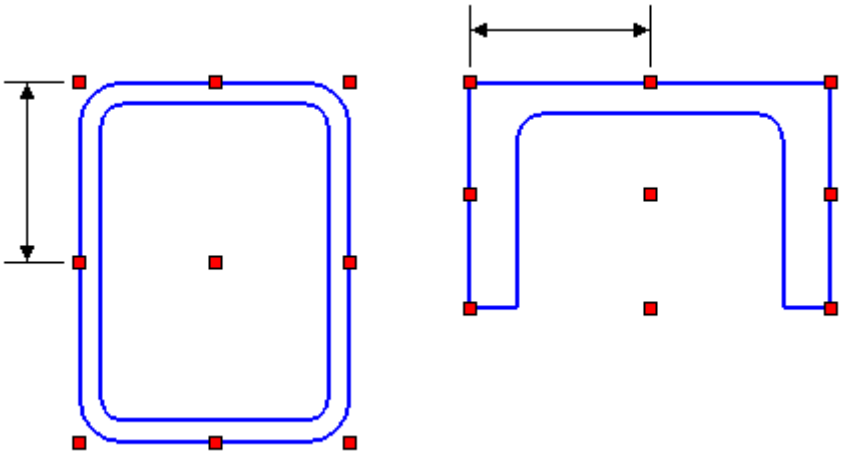

Note

Shift delta is ½ the size of the section in the direction being shifted.

Frame snap points

You can position frames using snap points. Snap points are cross section sketch keypoints, cross section range box points, and the cross section centroid.

To display the frame snap point commands, you must first select the Define Snap Point button  on the Frame command bar.

Option button	Option name	Description
	Show Default Snap Point	Shows the default snap point (blue dot).
	Show Current Snap Point	Shows the current snap point (green dot).
	Show Cross Section Centroid	Shows the centroid of the cross section (yellow dot).
	Show Range Box Points	Shows the cross section range box points (red dots). When you select one of the nine default snap points, the cross section shifts such that the selected snap point connects to the path (3). The default snap point (1) lies on the path (3) in the left image. If you select handle point (2), then that point moves to the path (3) as shown in the right image.

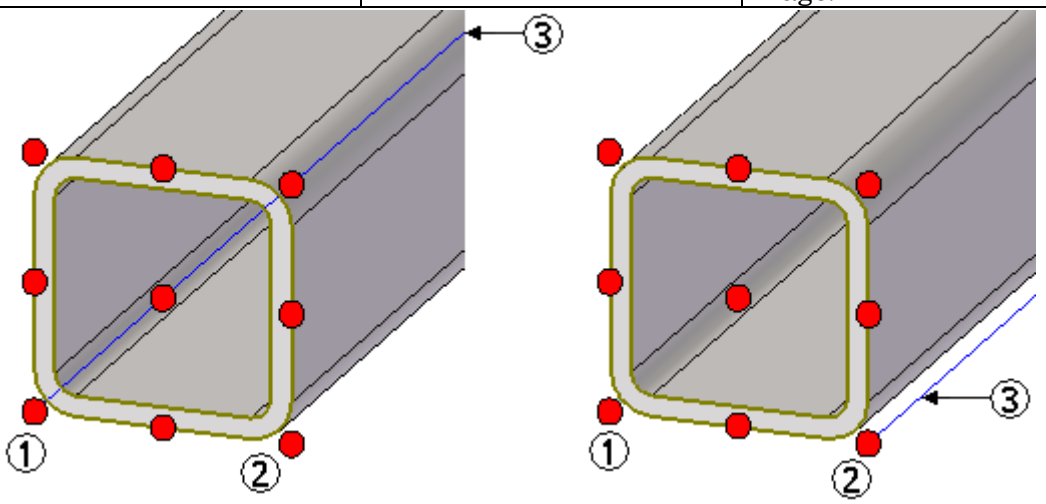

Option button	Option name	Description
	Show Cross Section Sketch	Activates the keypoints button , if a single cross section is selected. You can use this button to select any keypoint on the cross section sketch to snap to. The selected keypoint connects automatically to the frame path.

Angular orientation of frames

On command bar, specify the angular orientation (1) of a frame cross section relative to the path.

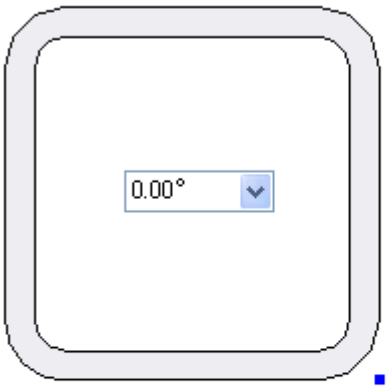

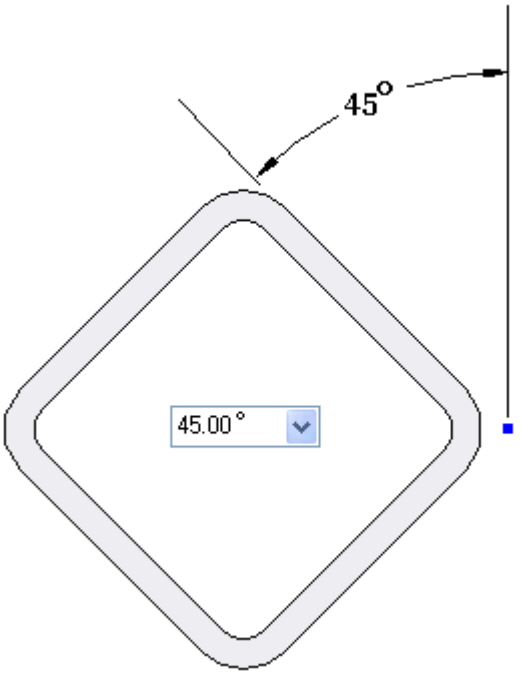

Editing Frame Components

Select a new frame cross section for an entire frame set or selected frames. Change cross sections in the Modify Cross Sections step.

Once the frames are selected, click the Accept button.

Click the Select New Cross Section Component button  .

The file Open dialog or the standard parts interface (depending which option is set) displays.

Select either new size of cross section or even a totally different type/size.

The default location to begin browsing for frame components is Program Files® Solid Edge ST3® Frames.

In the Open dialog, select the component file and then click the Open button. The frames update with the new component.

Note

Notice the Frame Files message.

Editing frame end conditions

Edit the end conditions of adjacent frame components. On the frames command bar, click the Modify End Conditions step.

Select the vertex of adjacent frame components to modify end condition between components. You can select more than one vertex. To edit the end conditions of the selected vertices, click the Accept button.

Click the new end condition and the modification is applied. Edit additional end conditions by clicking the Modify End Conditions step again. When all end condition modifications are complete, click Finish.

Editing frames activities

Overview

In these activities, you will edit an existing frame model. You will edit frame paths, position, end conditions and components.

Editing a corner treatment

Turn to **Appendix E** for this activity.

Editing a path definition

Turn to **Appendix F** for this activity.

Editing a single vertex

Turn to **Appendix G** for this activity.

Editing frame position using hot keys

Turn to **Appendix H** for this activity.

Editing frame position using snap points

Turn to **Appendix I** for this activity.

Editing frame components

Turn to **Appendix J** for this activity.

Editing frame cross section orientation

Turn to **Appendix K** for this activity.

Activities summary

You can edit any step in the creation of frames. So do not worry if you do not get the results desired in the initial placement. Making changes is easy to do.

Lesson

7 *Coping joints*

In the Frames Options dialog, the coping option is off by default. You apply coping to non-mitered joints.

(1) shows the result of coping turned off and (2) coping turned on.

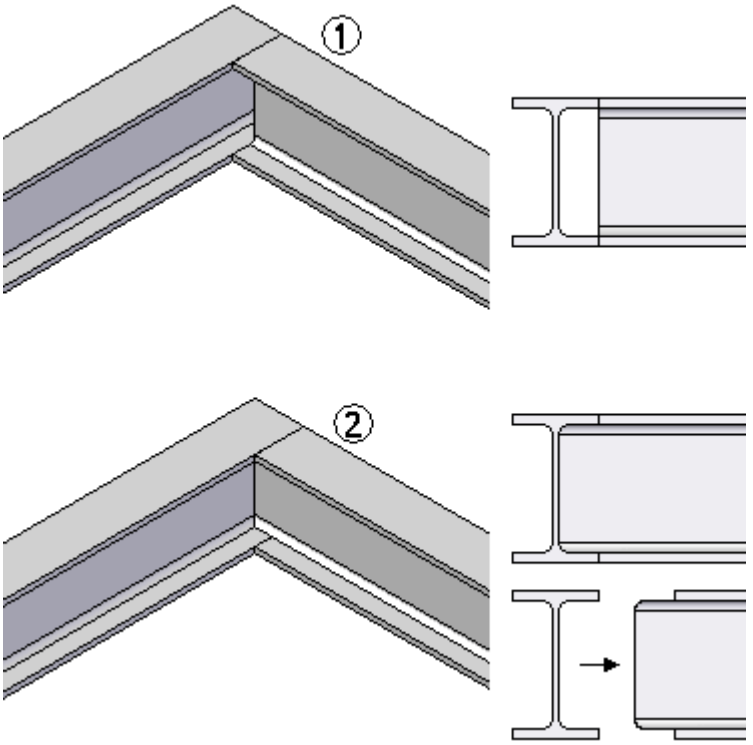

Activity: Coping joints and colinear paths

Overview

In this activity, you will use the coping non-mitered joints option. You will also learn how to handle colinear path segments.

Turn to **Appendix L** for this activity.

Lesson

8 *Creating custom frame components*

Create frames using delivered frame components or frame components from the Standard parts Library. A user-defined frame component can be used. This lesson covers the process of creating custom frame components.

Creating the frame cross section

A complete cross section of component must reside in either the first feature or first sketch of a part file.

If this component were used as is, it would produce a “solid” square tube (not hollowed out).

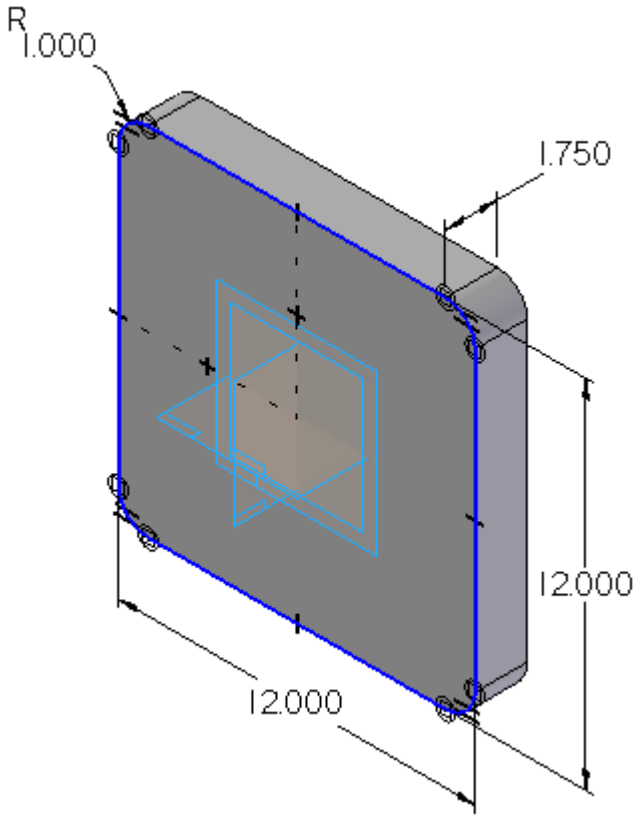

This component produces the intended “hollowed out” square tubing.

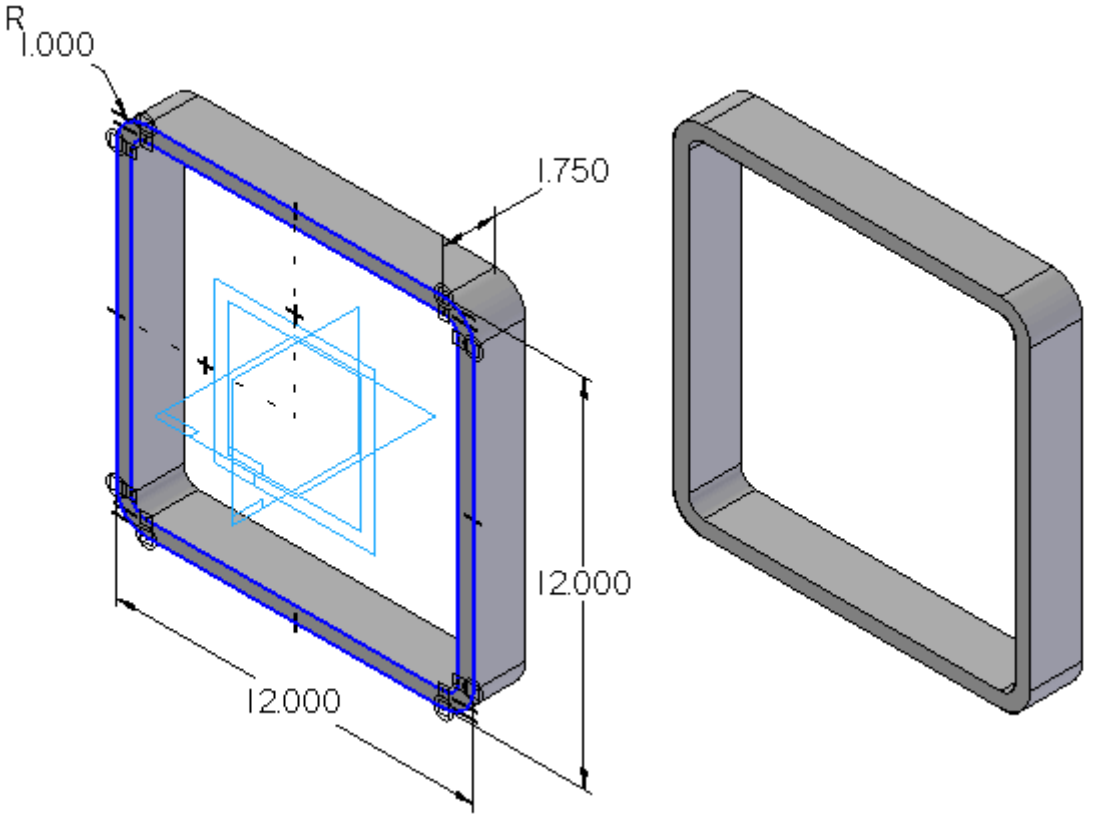

Snap point

The snap point is a point element in the cross section sketch. Use this point to specify the default snap/attach point for each cross section. The “snap” point indicates the point of the cross section that will be connected to the specified frame path.

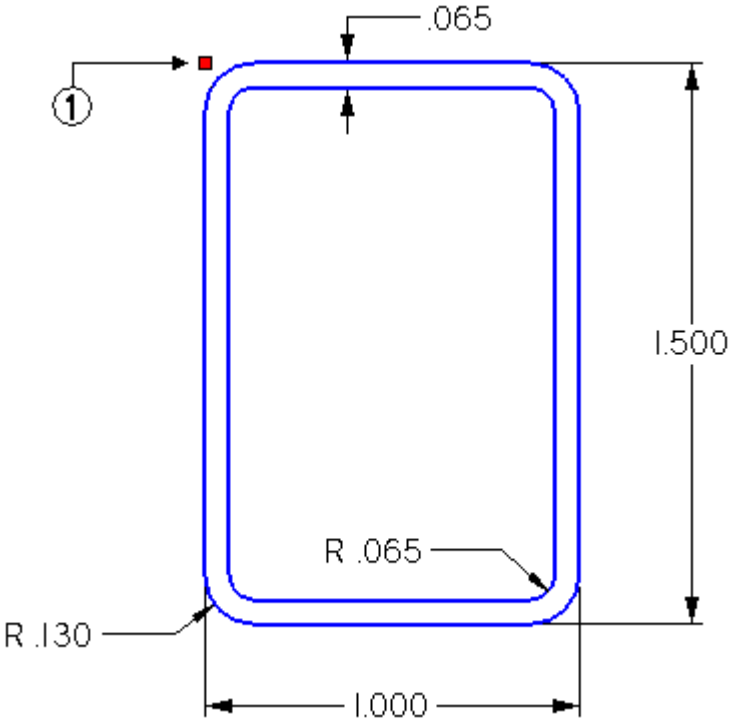

Note

If a snap point does not exist in the frame component file, the Frames command will default to the centroid of the 2-D cross section.

Frame component definition file

(1) relative orientation line

(2) range box of cross section

(3) computed centroid of range box

(4) default snap point

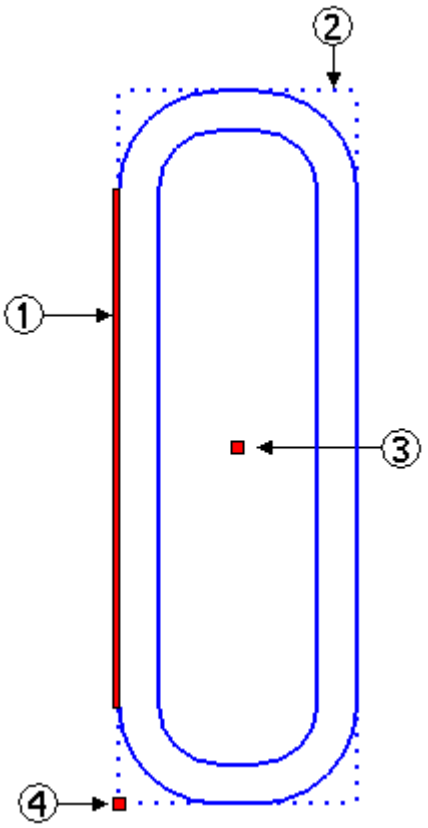

Add company specific file property information (for BOM parts list purposes).

Note

The frame component file does not have to contain a solid body of the feature. A sketch is enough to successfully create frames. However, it is a good idea to create the solid so the preview will be available when selecting the frame component.

Cross section orientation on reference plane

(5) reference plane created to place cross section onto

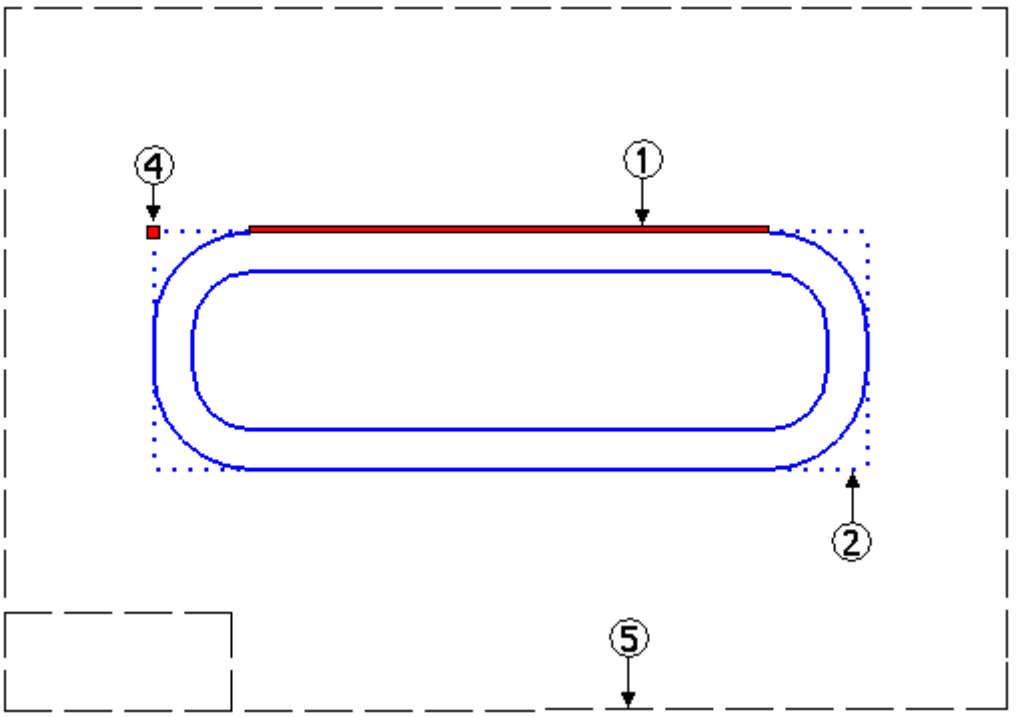

Defining hole locations in a frame

A frame component may contain information on where holes can be drilled.

- Hole locations (1, 2) are defined in the frame cross section.
- Hole diameter (3) represents the maximum allowed hole size.
- Hole position along a frame is specified during the assembly hole feature creation. A cylindrical construction surface added to the frame component defines the hole location.

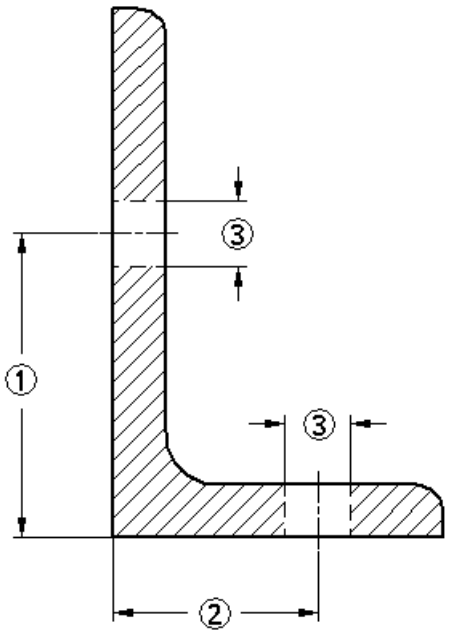

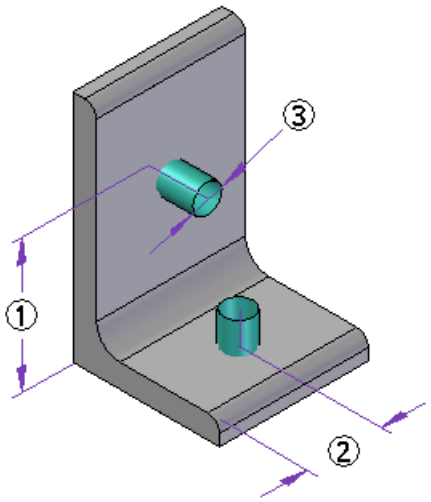

Creating holes in frames

You create holes in frames by adding assembly hole features in the Assembly environment. Use the cylindrical construction surfaces and sketch relationships in each frame member to create hole assembly features in the desired locations. You

can use the Include command to include edges from the construction surfaces to aid in aligning the assembly hole features.

If hole location construction surfaces exist in the cross section component file, they do not appear on the frame members by default when the frame is created. You must use the Hole Location® Retrieve from Cross Section Component command on the frame shortcut menu to bring these surfaces into the frame.

Removing the construction surfaces from the frame

You can hide construction surfaces by choosing the Show/Hide Component® Surfaces command on the shortcut menu.

You also can delete the construction surfaces from the frame by choosing the Hole Location® Delete from Frame command on the shortcut menu. Use the Retrieve from Cross Section Component command to restore them if needed.

Applying frame attributes

Once the custom frame cross section is defined, the next step is to apply frame attributes. You must be in the profile or sketch environment of the user-defined cross section.

To apply frame attributes, click Applications® Run Macro.

In the Run Macro dialog, click on the file *FrameComponentsUtility.exe* located in the Program Files/Solid Edge ST3/Frames folder. Click Open.

Frame utility location

Program Files\Solid Edge ST3\Frames\Frame Component Utility

Frame components utility process

Step 1: Click on the profile point to be defined as the handle point.

Step 2: Click on the profile line to be defined as the relative orientation.

> **Note**
>
> Steps 1 and 2 are order independent as long as you complete steps 1 and 2. This must be done for both handle point and orientation line for non-circular cross sections. Each section must have no more than one handle point and one orientation line defined.

Step 3: Click Step 3 in the Frame Component Utility. The profile point and line should highlight to verify appropriate attributes have been selected.

Step 4: Click Quit to complete the addition of attributes to the cross section.

The “Delete ALL Frame attributes on profile elements” button scans the current profile and deletes all of the existing frame attributes that may have been previously created.

Use-defined frame component is now ready for use.

Activity: Creating a custom frame

Overview

In this activity, you will create a custom frame.

Turn to **Appendix M** for this activity.

Lesson

9 *Drafting*

The process of creating drawings of 3D frames is the same as creating 3D assembly drawings.

We will cover the Parts List features that pertain to frames in an activity.

To learn more about parts lists, see the following Help topics:

- **Parts lists**
- **Exploded parts lists**
- **Using the columns tab**
- **Using the options page**

In this activity you will create a parts list that includes cut lengths for each component and choose how you want to organize the list for downstream viewers in manufacturing or purchasing. You will also create a parts list using rough-cut sizing, where you specify an amount that the system automatically adds to the exact length of frame. The last parts list will include the total length of each frame component.

Turn to **Appendix N** for this activity.

Lesson

10 Saving frame components

A frame entity can be saved non-associatively to either a part or assembly file.

Saving a single frame entity

Step 1: In the frame section of Assembly PathFinder, right-click a single entity.

Step 2: On the shortcut menu, click Save As and on the Save As dialog box, specify a folder and name for the entity.

The frame entity is not associative. Opening the saved entity file shows that the frame is a body feature not linked to the original model.

Saving a frame set

Step 1: In the frame section of Assembly PathFinder, right-click a frame set.

Step 2: On the shortcut menu, click Save As and on the Save As dialog box, specify a folder and name for the frame set. The frame set name is the default filename for the save as assembly file.

The frame set is not associative. Notice when the Save As assembly (i.e. *Frame_5.asm*) is opened that the components from the original file are copied and renamed.

Save a single frame component associatively with the Save Selected Model command.

Step 1: Choose Application button® Save As® Save Selected Model.

Step 2: Select a frame entity to be saved to the file.

Step 3: Enter a filename and folder for the saved model.

When the saved model is opened, notice that the geometry of the frame comes in as a linked part copy . Any change made to the original frame entity will be reflected in the saved model.

A Activity: Using OrientXpres

Step 1

- Open *orientxpres.asm*.

Step 2

Start the Frames application.

- Choose Frame Design located on the Tools tab in the Environs group.

Step 3

Create the first 3D line segment (1).

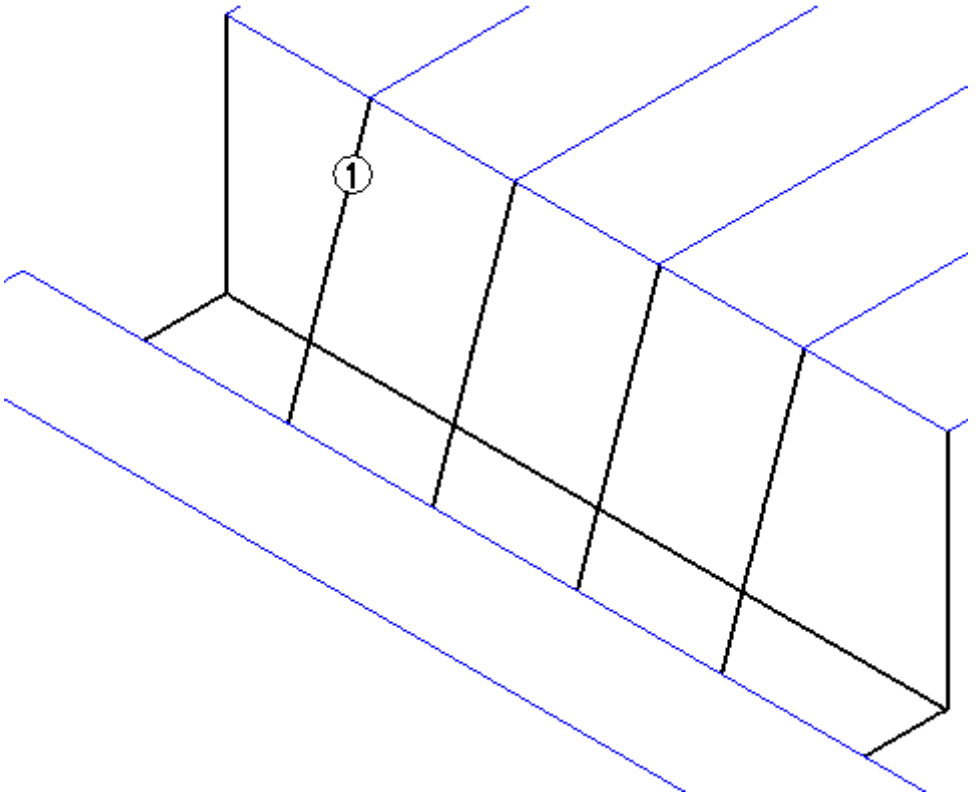

- In the Segments group, choose the Line Segment command  .
- Select the “Don’t show this dialog at start of the command” check box on the Line Segments Tips dialog box. Close the dialog box.

- To define the first point of the line segment, select the sketch line shown and make sure the endpoint displays.

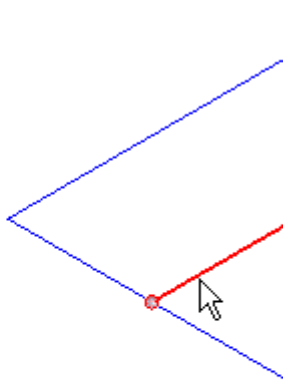

Note

The second point of the line segment is attached to the cursor. At this point you could select other endpoints to connect to. However, in this step there is no endpoint to connect to. Lock to the YZ plane and then connect to line (2).

- Drag the cursor over the OrientXpres triad and click when the YZ plane highlights.

  The second point is now locked to the YZ plane.

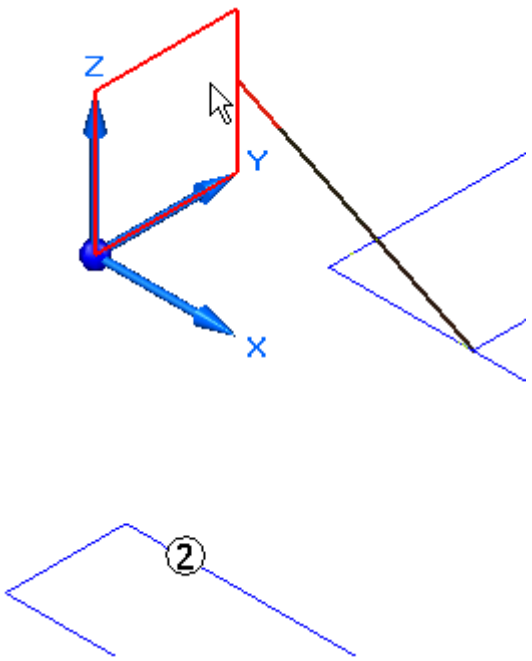

- Select line (2) and then right-click.

  The line segment (1) definition is complete.

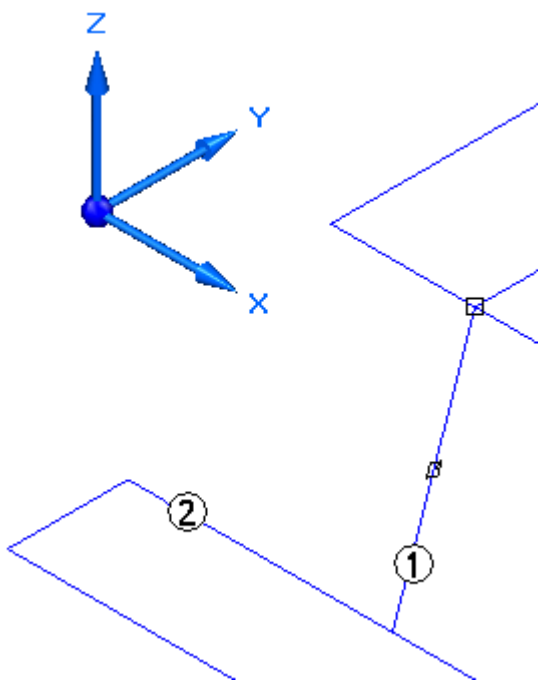

Notice from the top view that the line segment (1) is in the plane of line (3).

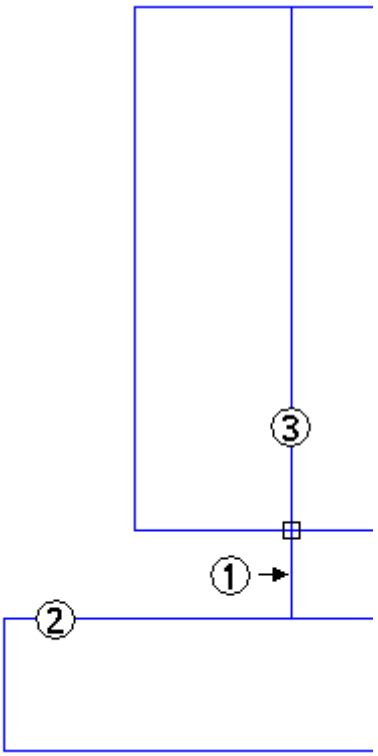

- Place the three remaining (1) line segments using the same instructions.

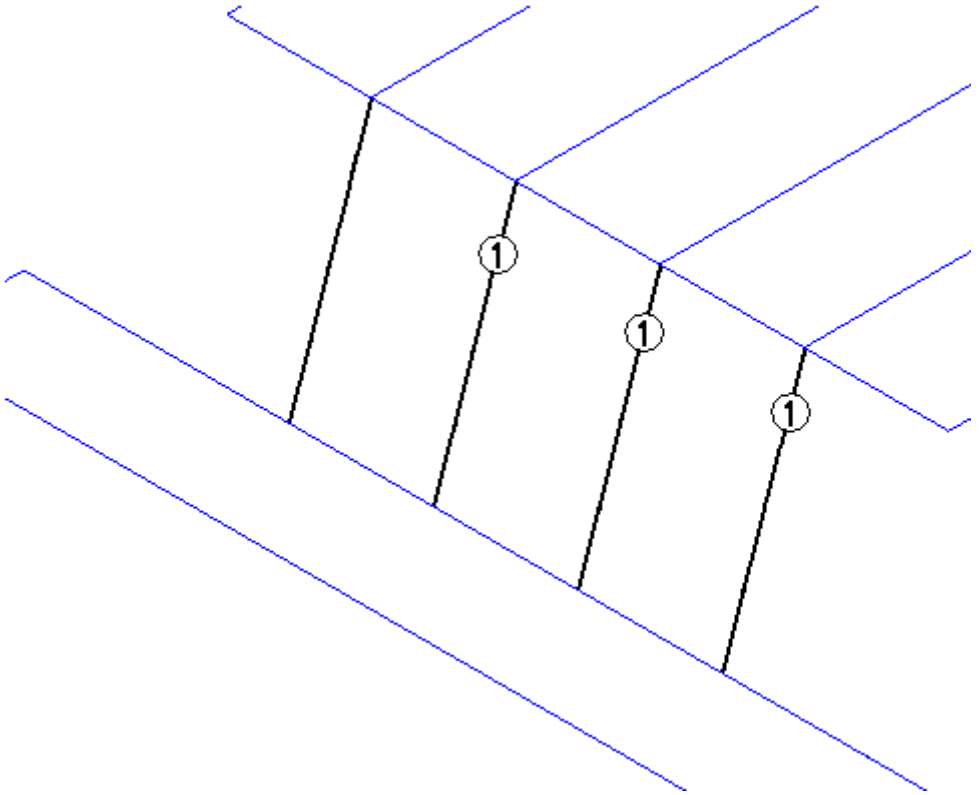

Step 4

Place line segments (4) and (5) which use the OrientXpres axis lock.

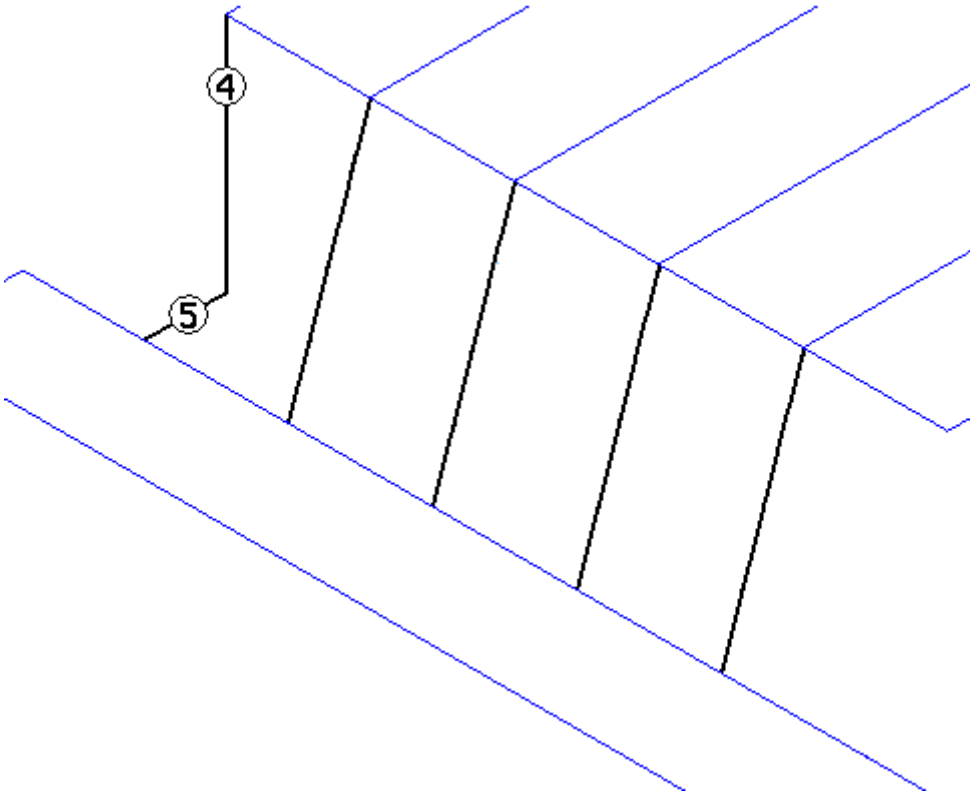

- Select sketch line (6) and make sure the endpoint appears.

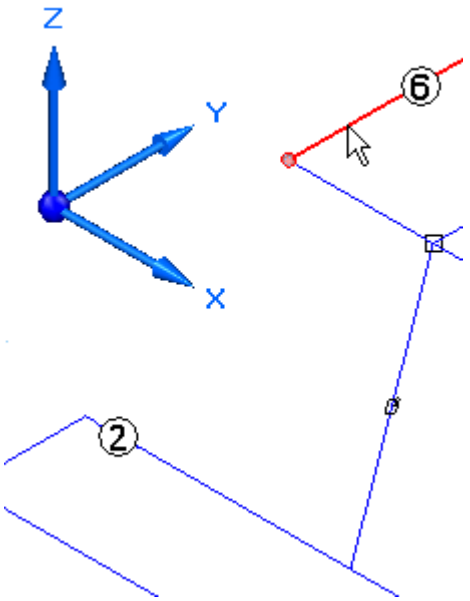

- Lock the second point to the Z direction. On the OrientXpres triad, click the Z arrow.

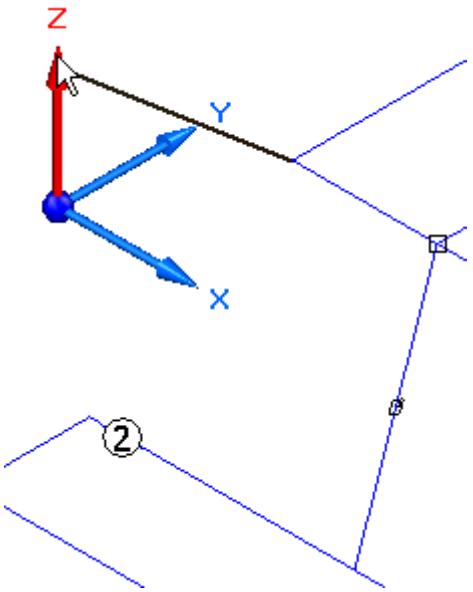

- Drag the cursor and notice the line segment only travels in the Z direction. To define the second point, select line (2). This will set the length of the segment to be the same depth as line (2). Do not right-click.

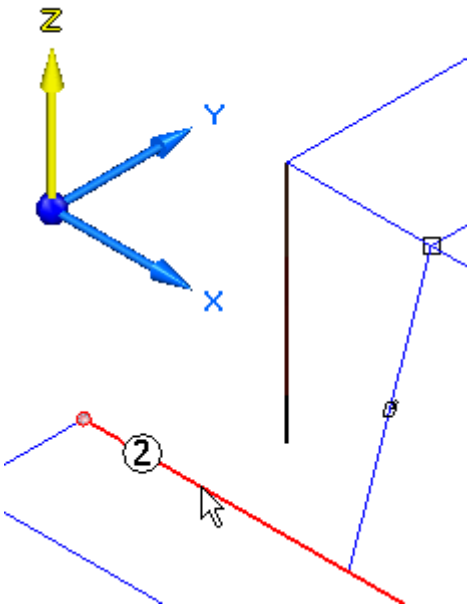

- On the OrientXpres triad, click the Y arrow.

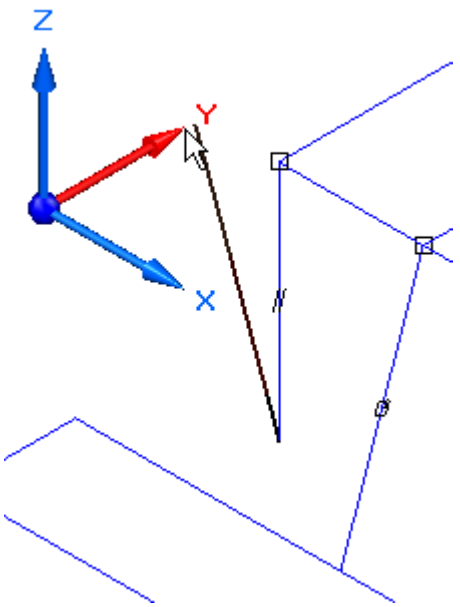

- Drag the cursor and notice the line segment only travels in the Y direction. To define the second point, select line (2) and then right-click. This connects the segment to line (2).

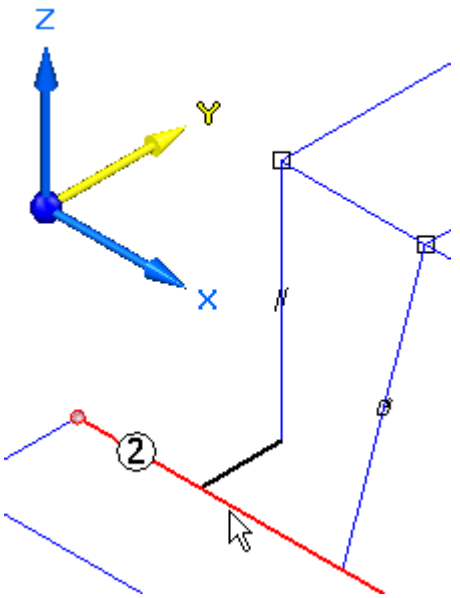

- Place the two line segments (4) and (5) on the opposite end using the same instructions.

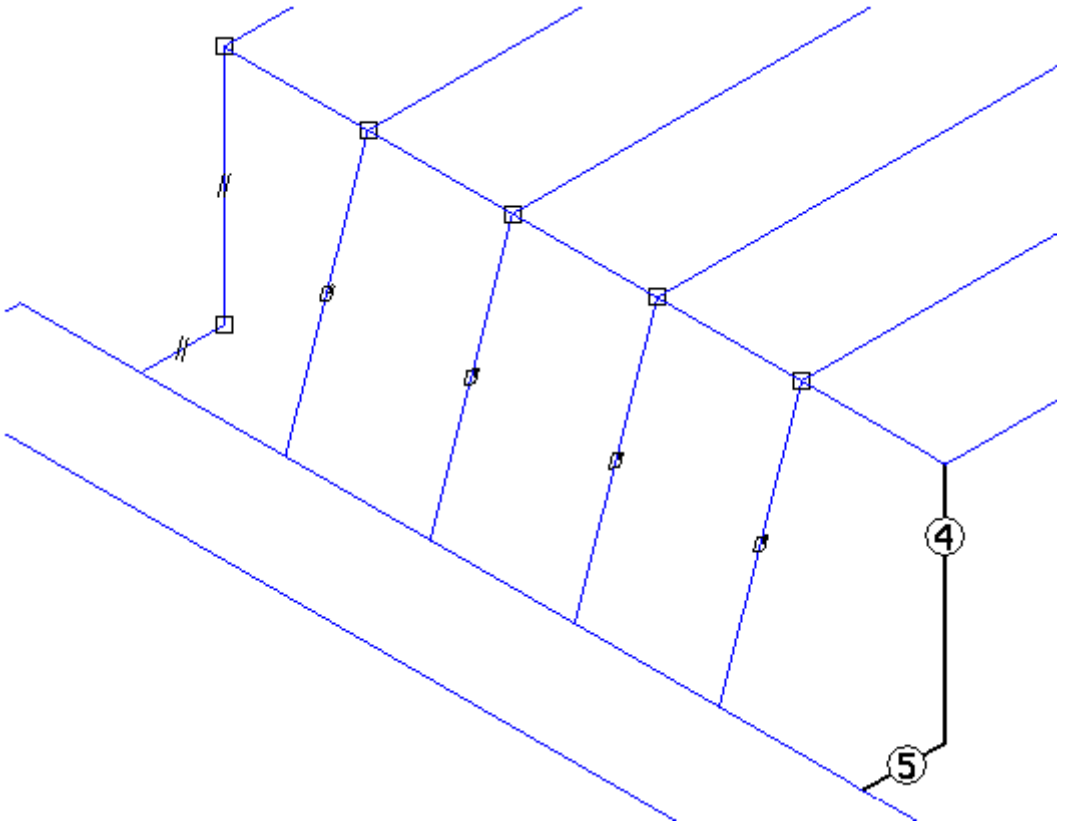

Step 5

Place one last line segment without using the OrientXpres tool. The tool is not needed because there are two endpoints to connect to. Use endpoints of 3D line segments.

- Place a line segment by selecting point (1) and then point (2). Right-click.

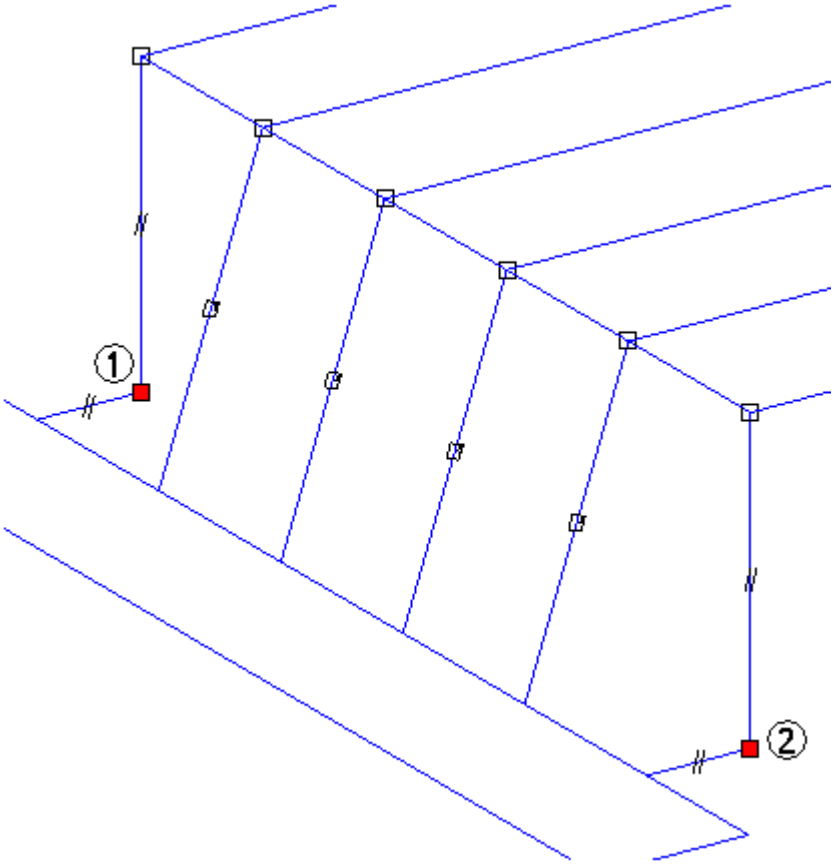

- Notice the line segment (7) has no symbol attached to it. When the OrientXpres tool is used, an axis or plane symbol is attached to the line segment.

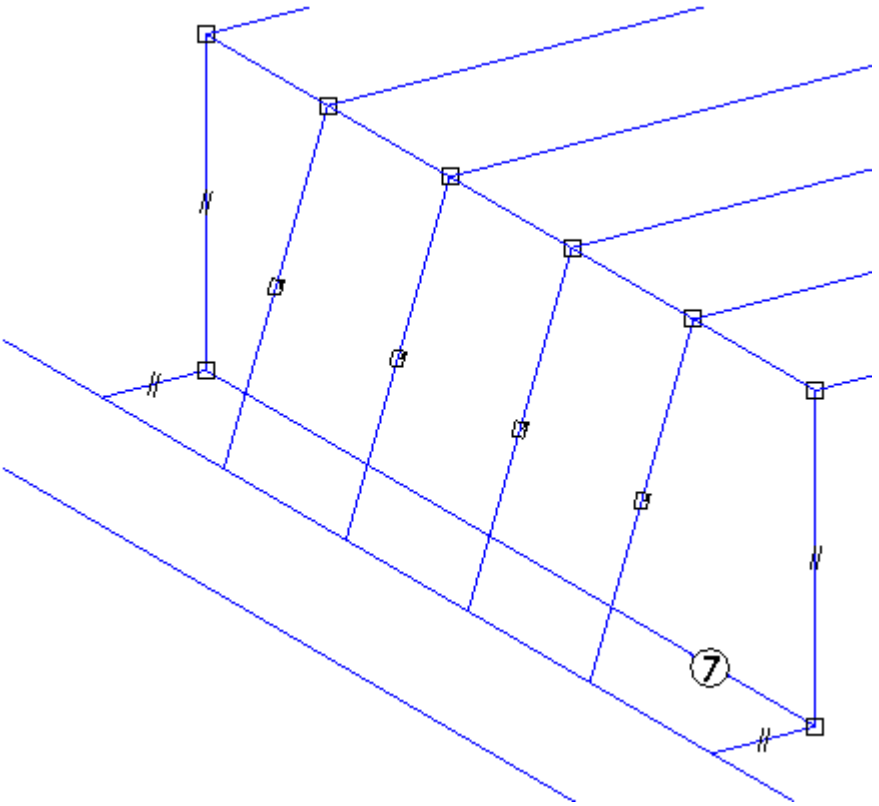

- Activity complete. Close the file and do not save.

Summary

In this activity you learned how to use OrientXpres to draw 3D line segments. The OrientXpres triad is used to control the direction of a line segment.

B Activity: Corner treatment options

Step 1

- Copy *C-channel35.par*, *C-channel65.par*, *C-channel95.par*, *square30.par*, *square45.par*, *square60.par* and *square90.par* to the Program Files/Solid Edge ST3/Frames folder.

  Note

  This step will make these components available when selecting the Frame–Select Cross Section Component button.

Step 2

- Open *corner_options.asm*.

Step 3

- Start the Frame Design application.

Step 4

Begin by placing frames using the default option (miter).

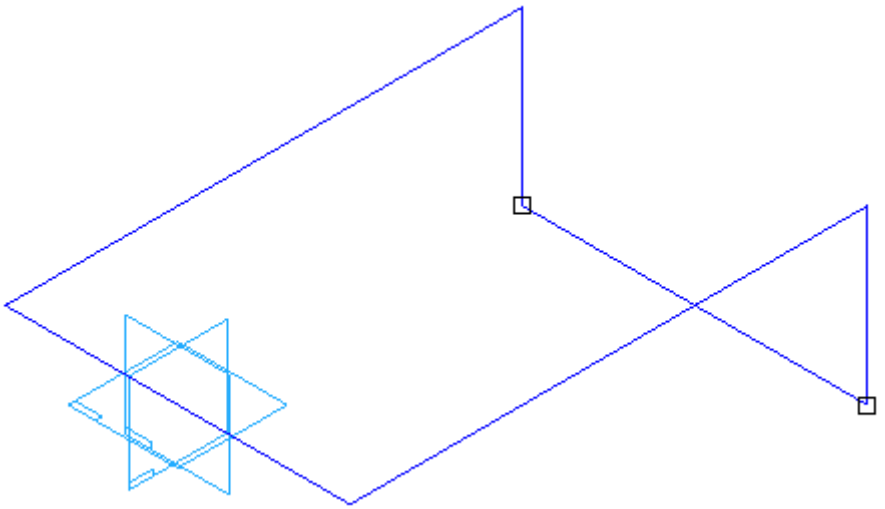

- Choose the Frame command .
- On the Frame Options dialog, select OK. Notice that miter is always the default option.
- On the frames command bar, click the Frame–Select Cross Section Component button .
- Select *square30.par* and then click Open..
- Click the “Do not show this message again.” button and then click OK.

- Drag a fence around all of the geometry and then right-click. Do not click Finish. Notice all corners are mitered.

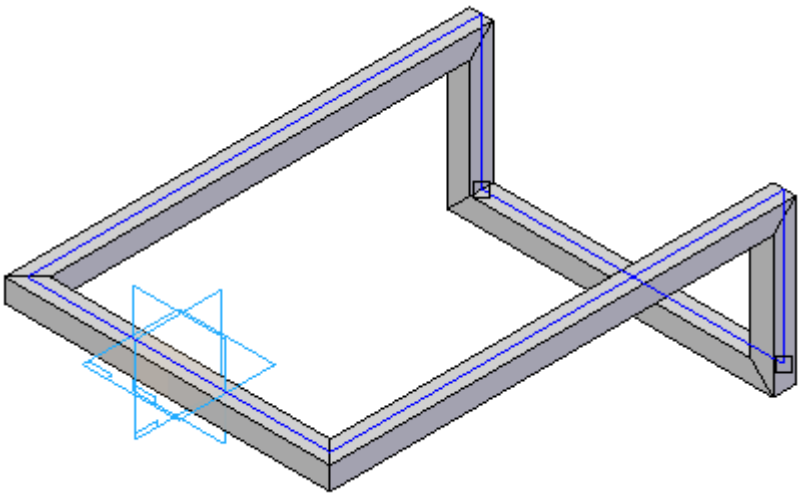

Step 5

Change the corner treatment.

- Choose Frame Options.
- Click Butt1 and then click OK.

- Notice the butt1 result. The longer members butt up against the shorter members. Do not click Finish.

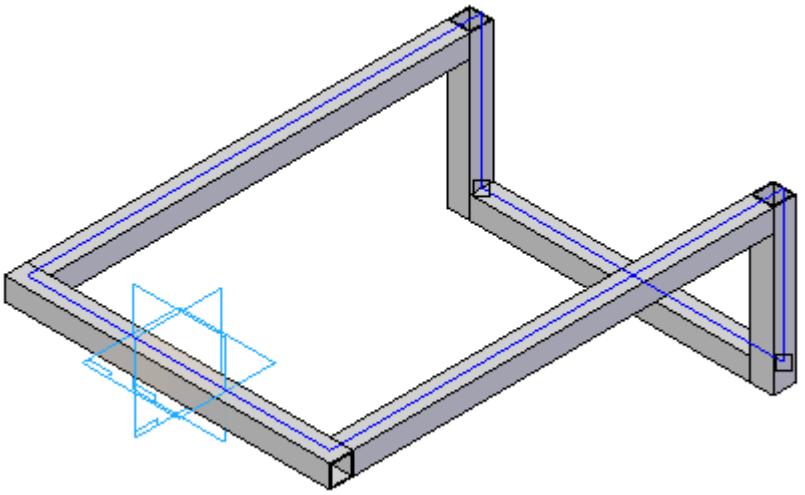

Step 6

Apply a butt2 corner option.

- Choose Frame options.
- Click Butt2 and then click OK.
- Notice the butt2 result. The shorter members butt up against the longer members. Do not click Finish.

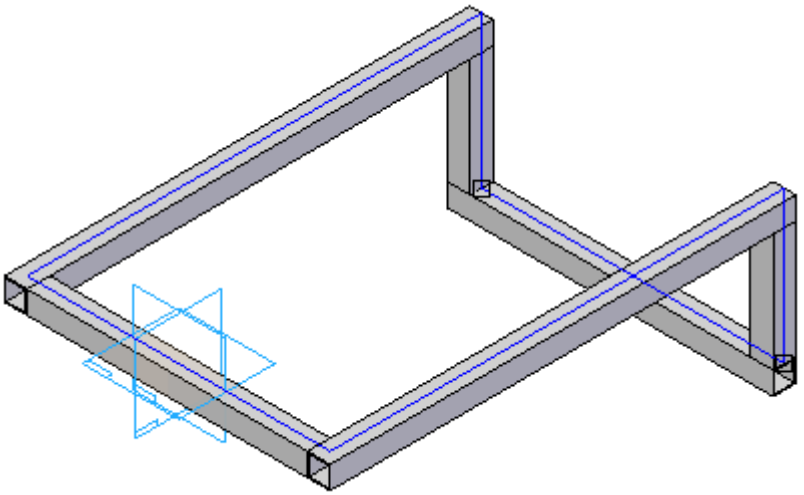

Step 7

Apply an Extend frame component corner option.

- Choose Frame options.
- Click the Extend frame component option.
- Enter 80 in distance field and click OK. Notice the extend result. A negative value will shorten the members. Do not click Finish.

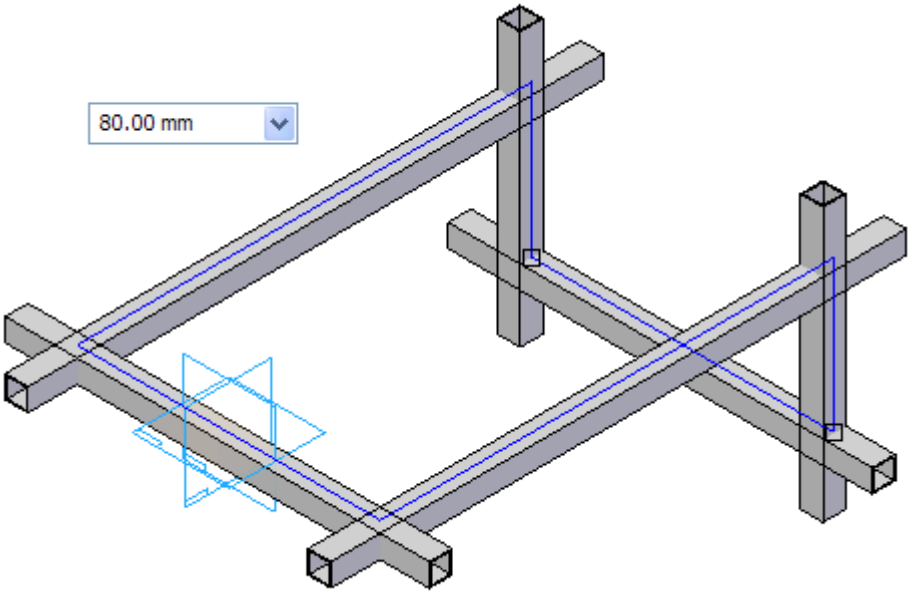

Step 8

Apply a no corner treatment corner option.

- Choose Frame options.
- Click the No corner treatment option. Do not click Finish. Notice that no members are trimmed. Each frame is the length of the path.

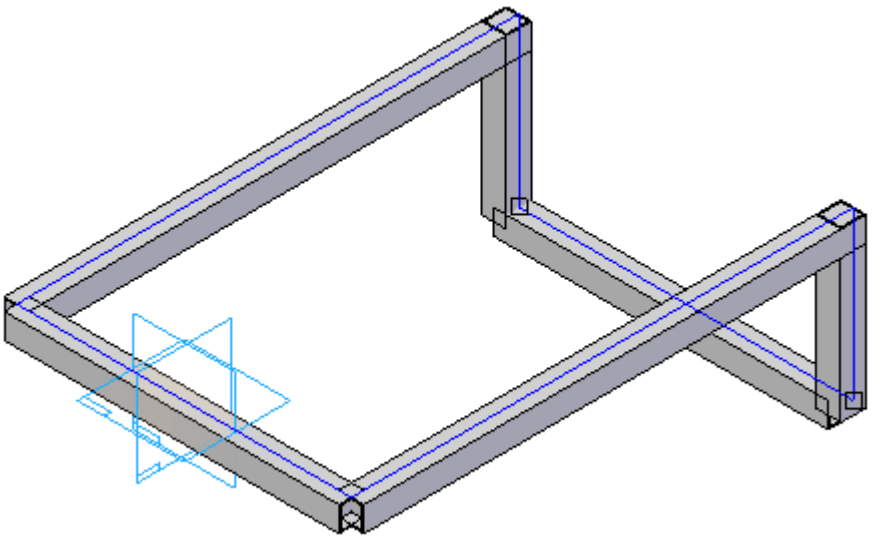

- Notice in PathFinder that there are six frame components created.

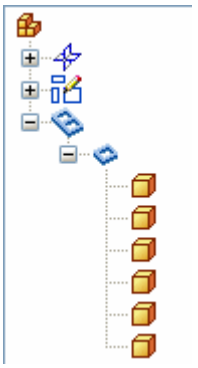

Step 9

Apply a radius corner option.

- Choose Frame options.
- Click the Apply radius corner option.
- Enter 50 and then click OK. Click Finish.

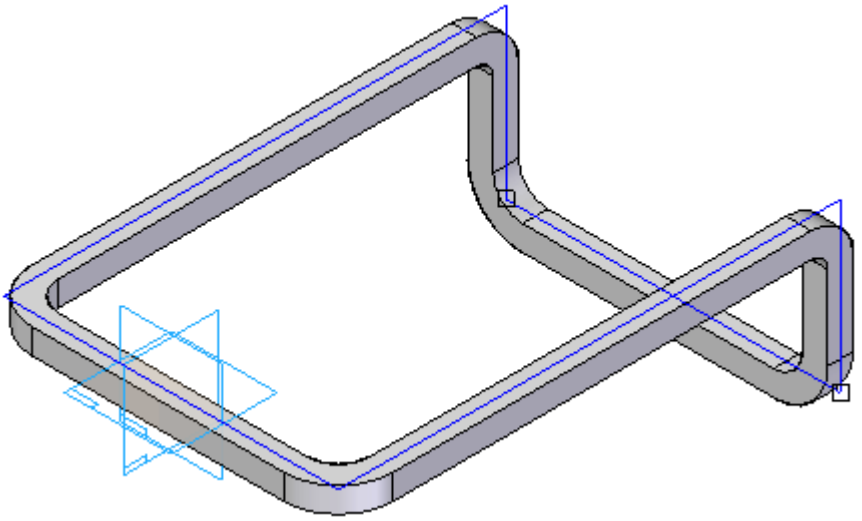

- Notice in PathFinder that there is only one frame component created. When a radius is applied to a corner, the two members that meet at that corner become one frame.

Step 10

This completes the activity.

Exit the assembly file and do not save. Click No to save the Display Configuration.

Activity summary

Change the corner treatment options at any time during the creation of frame components. Once the command is finished, go back and edit the frame definition to change the corner options.

C Activity: Dune buggy frame

Step 1

- Open *dune_buggy.asm*.

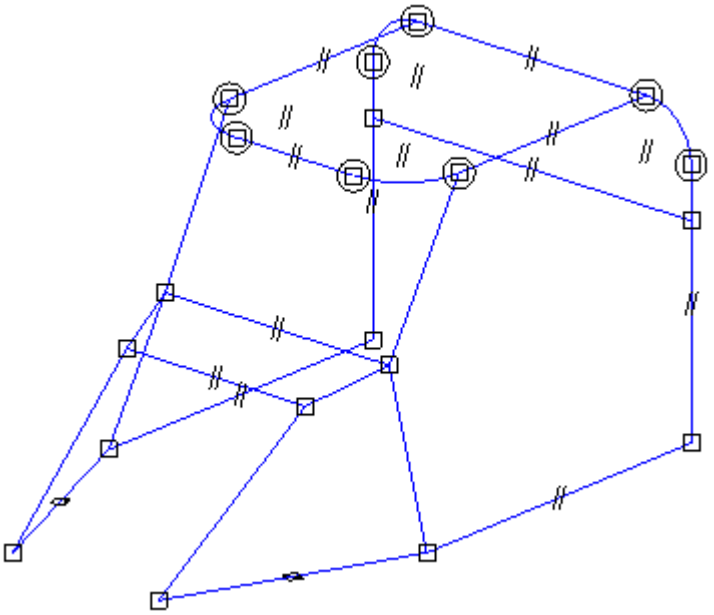

Step 2

Create the dune buggy frames.

- Choose the Frame command .
- Click OK in the Frame Options dialog. Use the default miter corner treatment.
- On the command bar, click the Select Cross Section Component button .
- In the Frame dialog, select the DIN folder.
- Select the Round Tubing folder.
- Select the *RoundTubing 25x2.par* component and then click Open.
- Drag a select fence around all paths and then click the Accept button.

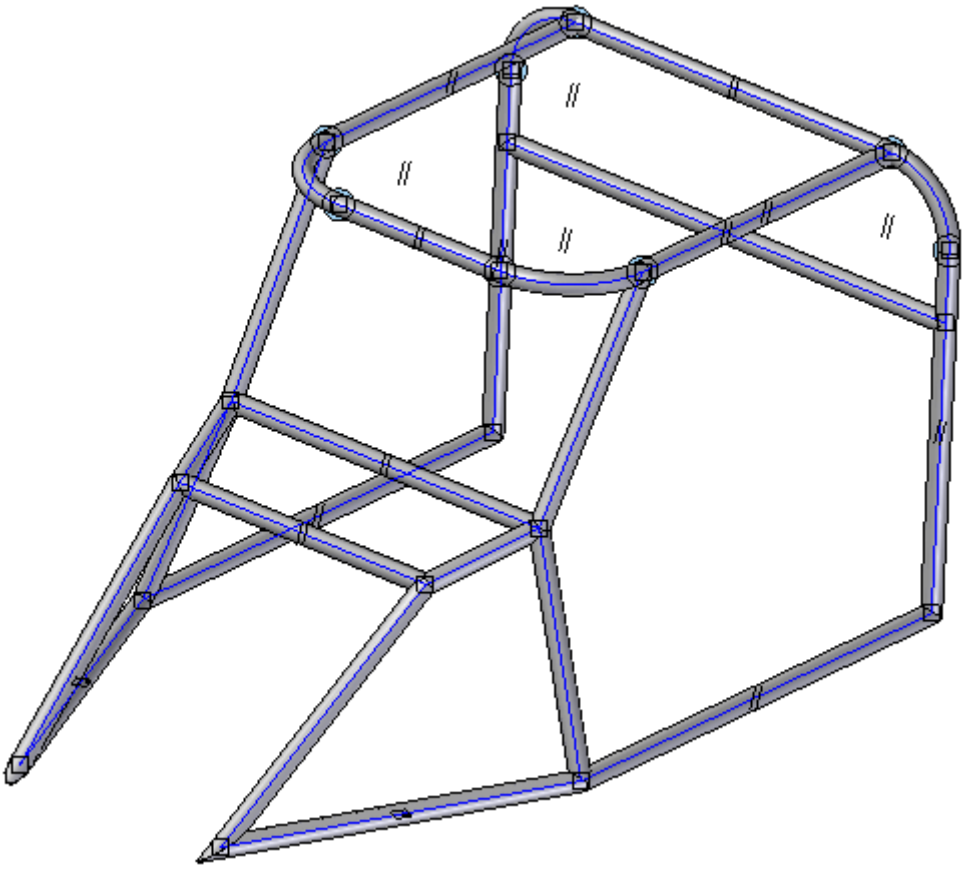

- Click Finish.

Step 3

Observe the trimming results.

- Zoom in to the area shown.

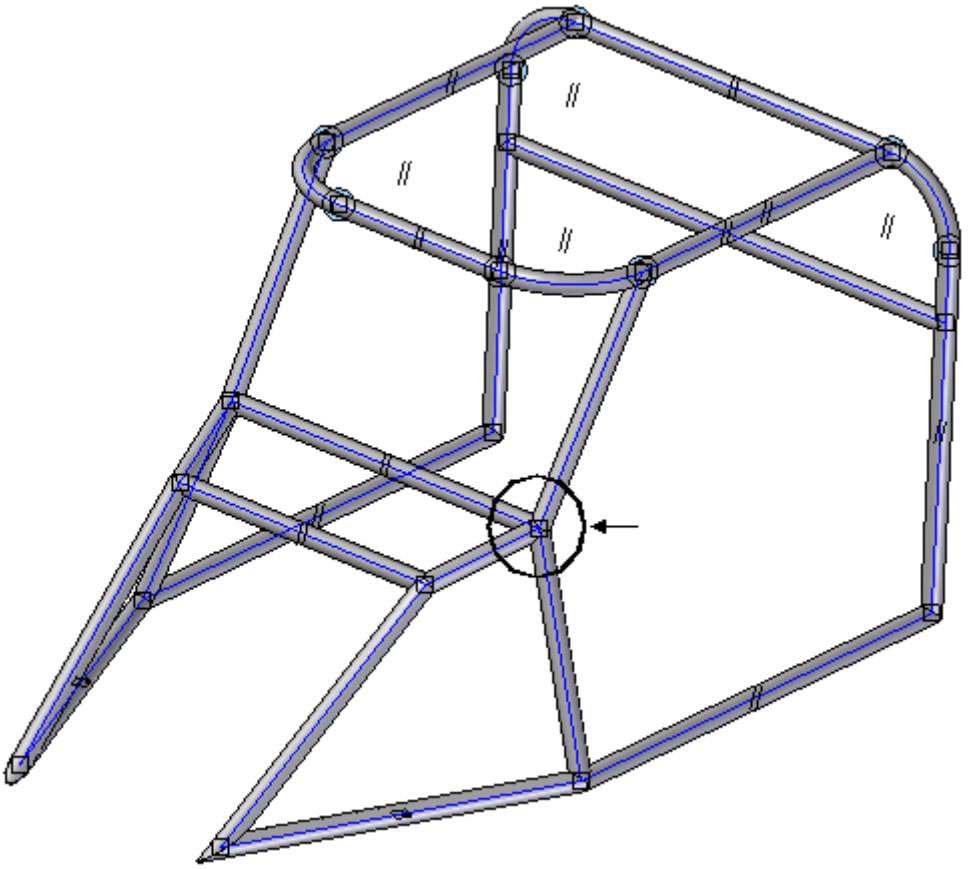

- Observe the trimming results. Four frames meet at a single point and are all trimmed as expected.

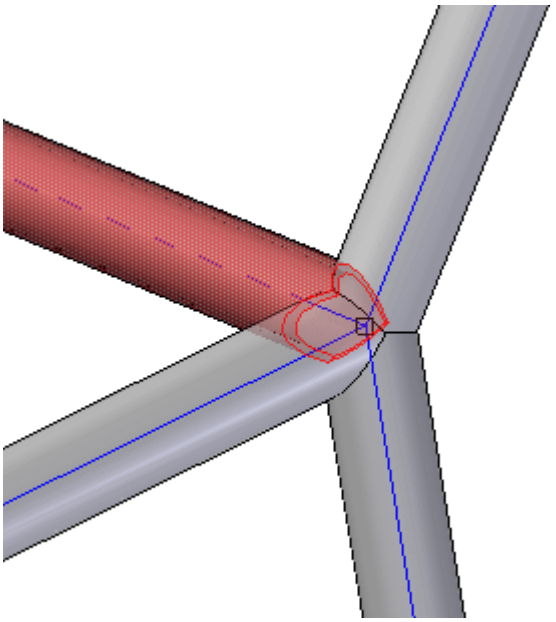

Step 4

This completes the activity.

- Close *dune_buggy.asm*.

D Activity: Automatic frame positioning

Step 1

- Open *auto-position.asm*.

Step 2

Place the two frames shown. Use component Frames/DIN/Rectangular Tubing/*Rectangular Tubing 40x20x2.par*. Use a butt1 corner treatment option.

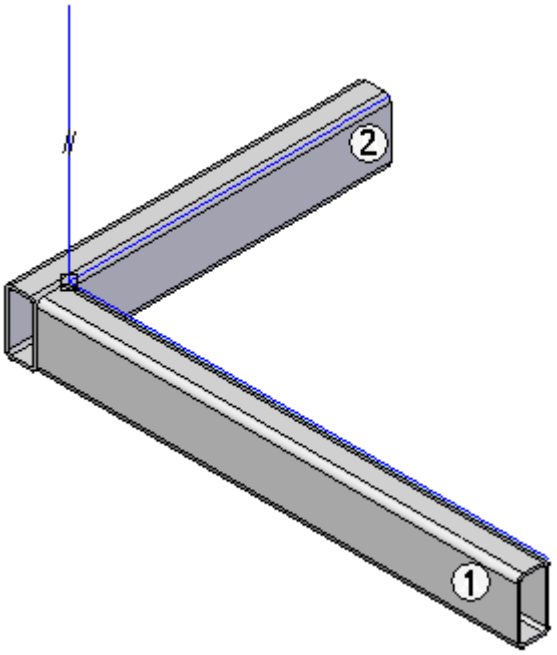

Note

If you select a single path to place a frame, then only one frame will be in the frame set. If you select multiple paths to place frames, then all of the frames will be included in a single frame set. When a frame is selected to modify its cross section, all cross sections in the frame set are highlighted and are ready to be accepted for modification. If only a single cross section is to be modified, then click the Deselect button. Select the target cross section and then click Accept.

Step 3

Reposition component cross sections (1 and 2) to not be at the default placement position.

Procedure to reposition a cross section

Step 1: Select the frame to reposition.

Step 2: Right-click to access the short-cut menu and choose Edit definition.

Step 3: On the Frame command bar, click the Modify Cross Sections step.

Step 4: Accept the highlighted cross section.

Step 5: Use the left, right, up, down arrows to reposition the cross section.

Step 6: On command bar, click Finish.

- Reposition component (1) cross section.

  Press the left-arrow twice.

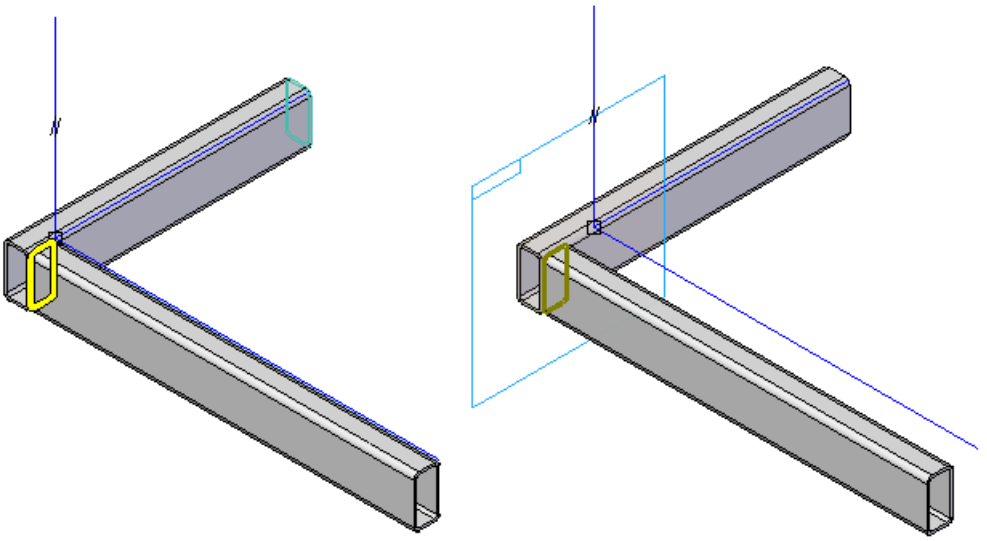

- Reposition component (2) cross section.

  Press the left-arrow twice.

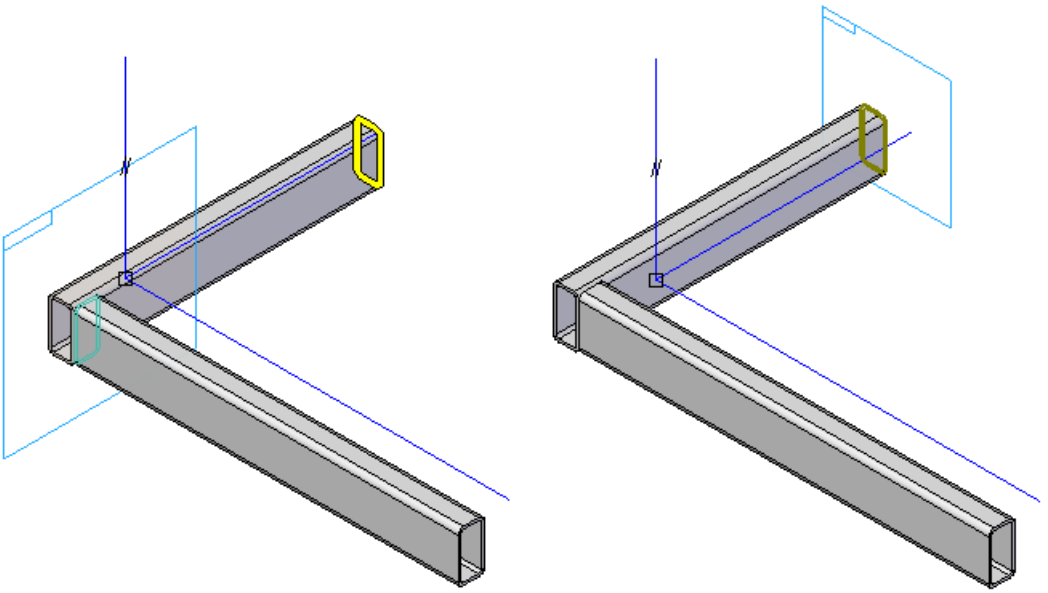

Step 4

Place a vertical frame using the *Rectangular Tubing 40x20x2.par*component. Auto-positioning is on by default.

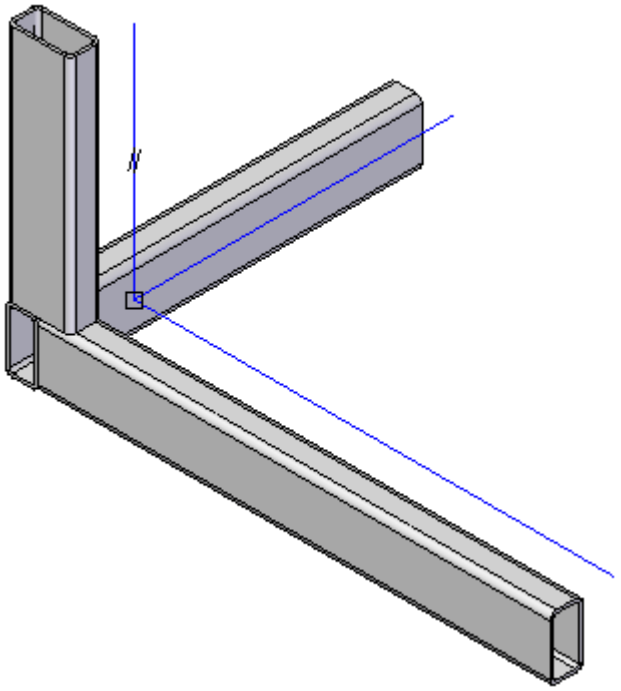

Step 5

Edit the position of frames (1) and (2) and observe how frame (3) repositions automatically.

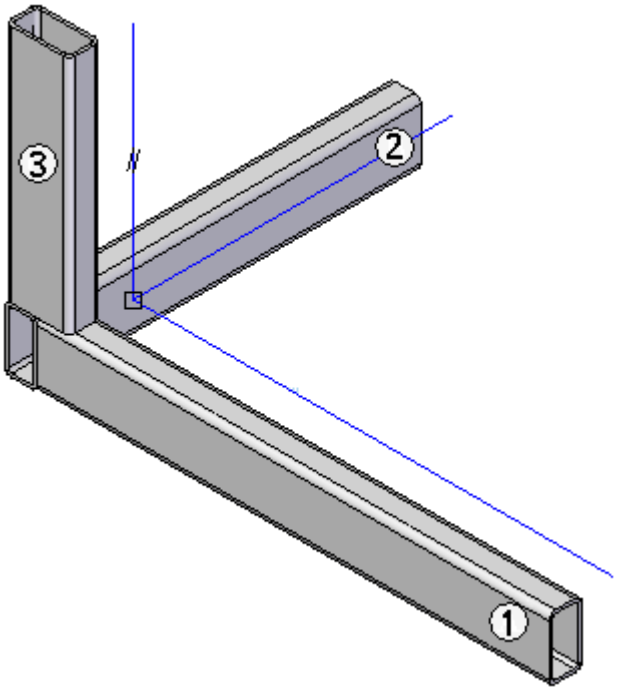

- Reposition component (1) cross section. Move cross section to the left and right and notice how (3) repositions automatically.
- Reposition component (2) cross section. Move cross section to the left and right and notice how (3) repositions automatically.

Step 6

Turn off auto-positioning on frame (3) and notice the behavior.

- Edit frame (3) and turn off auto-positioning.
- Edit the position of frame cross sections (1 and 2). Notice that frame (3) remains fixed at its last repositioned location.

Step 7

This completes the activity.

- Close *auto-position.asm*.

E Activity: Editing a corner treatment

Step 1

- Open *edit01.asm*.

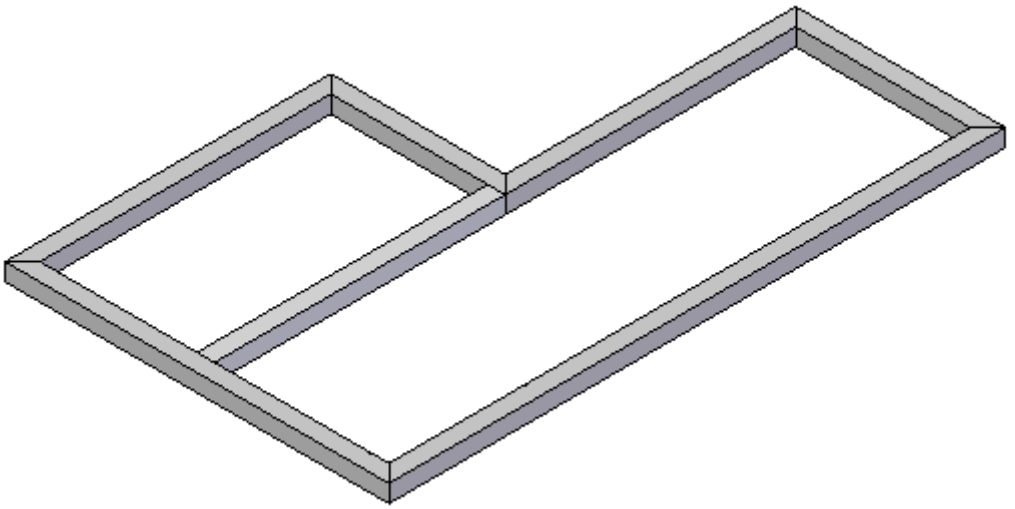

Step 2

Edit the corner treatment assigned to the outside frame set. Change the corner treatment from a miter to a butt1.

- Click the plus sign to display the frame components in Assembly Pathfinder.

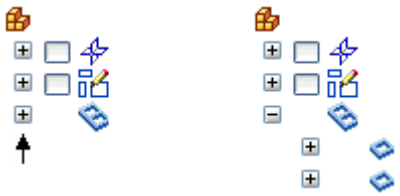

- In PathFinder, right-click on **Frame_1** and choose Edit Definition.
- On the command bar, click the Frame Options button. Click the Butt1 corner treatment and then click OK.

Step 3

- Click Finish and close *edit01.asm*.

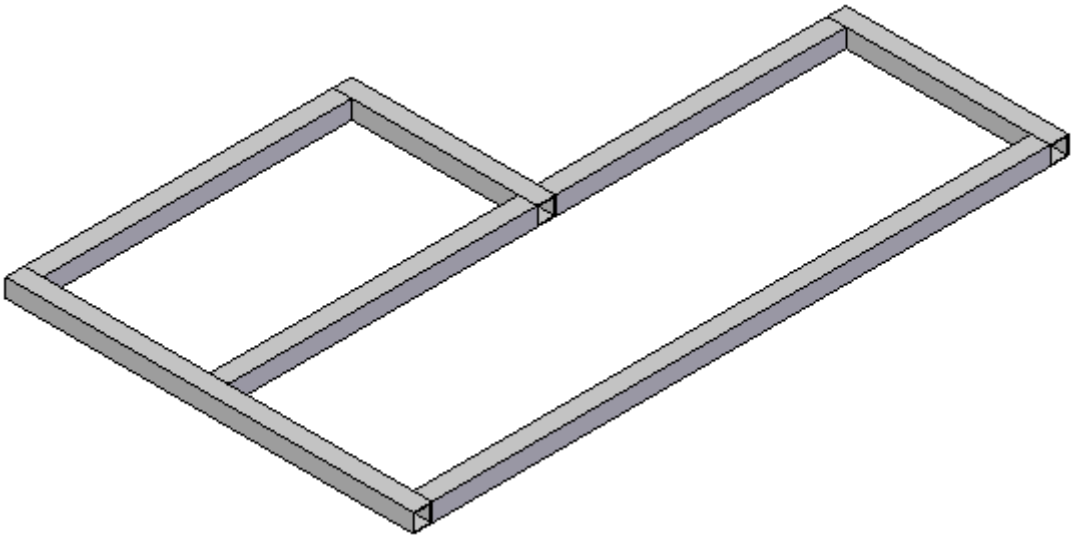

F Activity: Editing a path definition

Step 1

- Open *edit02.asm*.

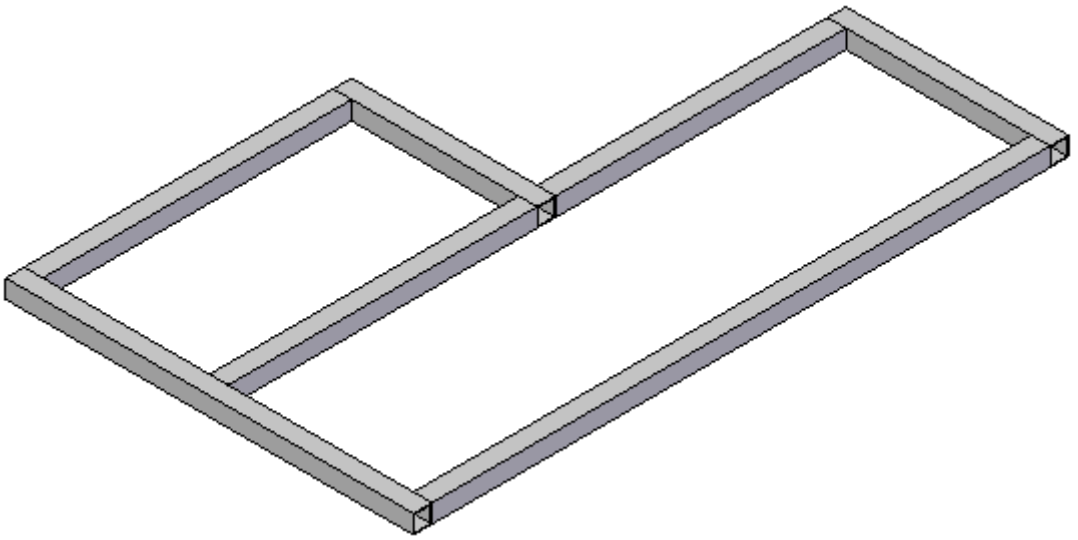

Step 2

Edit a path definition.

- Turn on the sketch display. Click the Sketches collector expand button. Click the sketch check box to display the sketches.

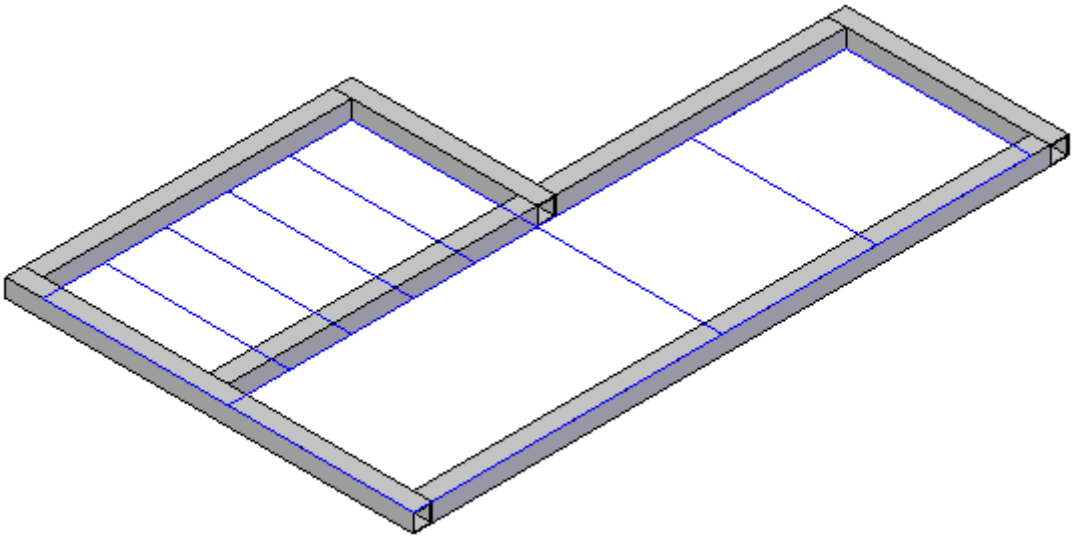

- In PathFinder, right-click on **Frame_2** and choose Edit Definition.

- On command bar, click the Select path Step button.

  Path (1) highlights because it is the only path defined for Frame_2. Select the remaining sketch elements highlighted and then click the Accept button.

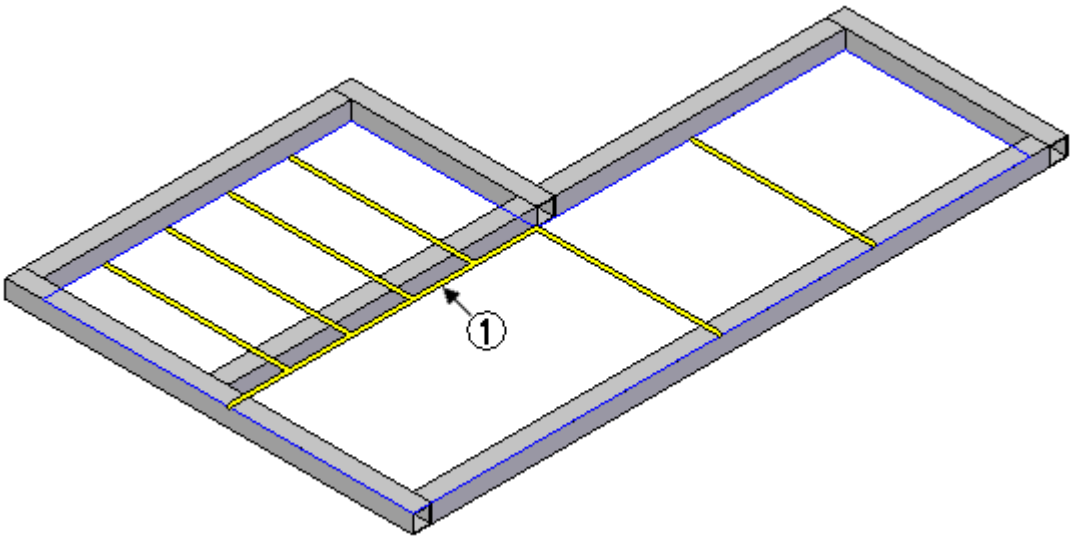

Step 3

- Click Finish and close *edit02.asm*.

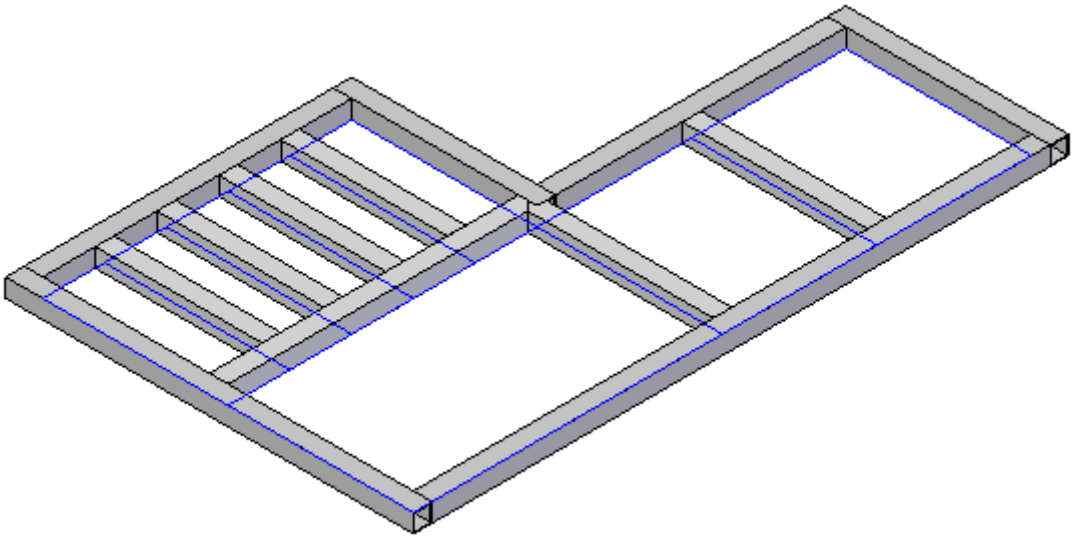

G Activity: Editing a single vertex

Step 1

- Open *edit03.asm*.

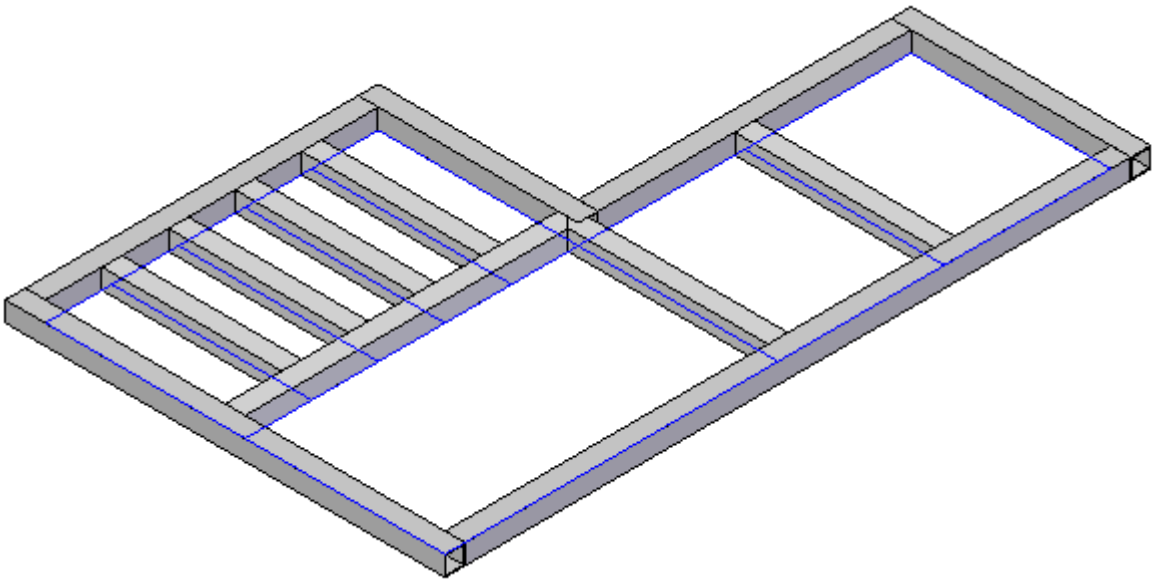

Step 2

Edit a corner treatment for single vertex.

- Notice that in the previous activity, a miter corner treatment was applied when a new path was added.

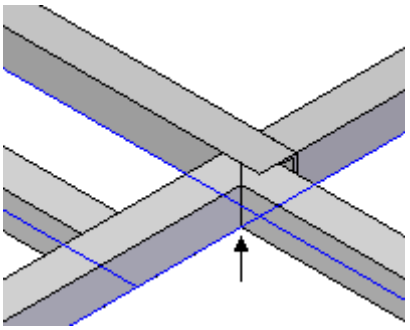

Right-click on Frame_2 and choose Edit Definition.

- On the command bar, click the Modify End Conditions button.
- Select the vertex shown and then click the Accept button.

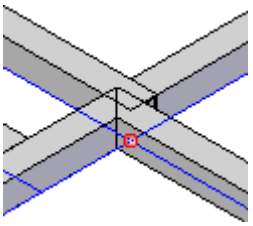

- Choose the Butt2 button and then click Finish.

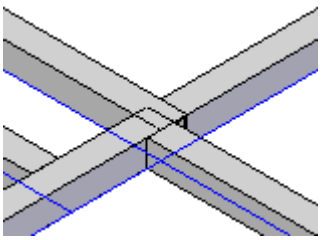

Step 3

- Close *edit03.asm*.

H Activity: Editing frame position using hot keys

Step 1

- Open *edit04.asm*.

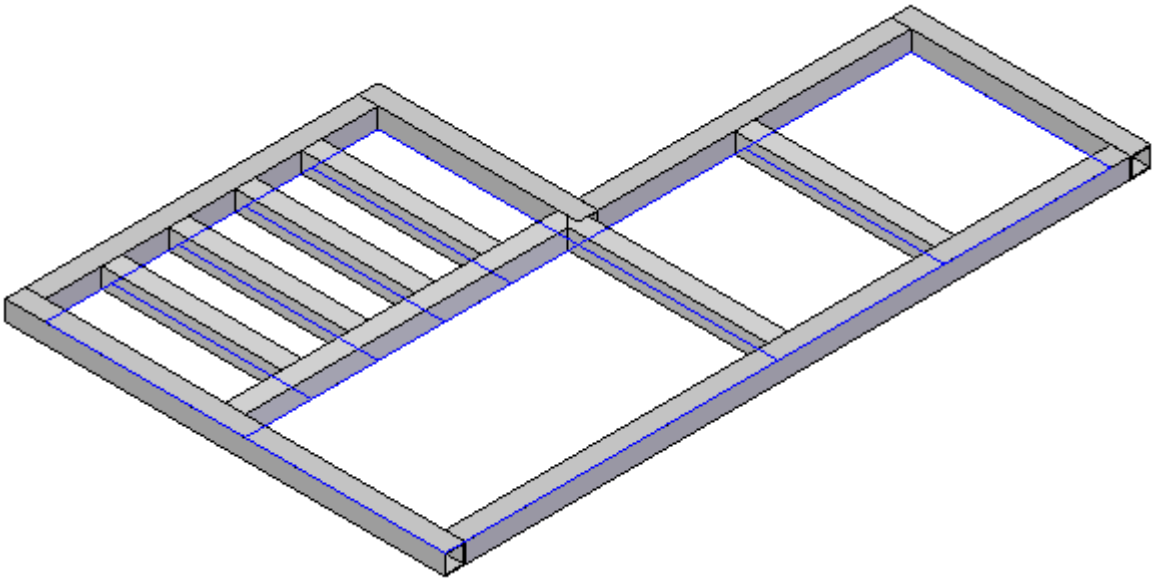

Step 2

Reposition frame components.

- Change to a Top view.

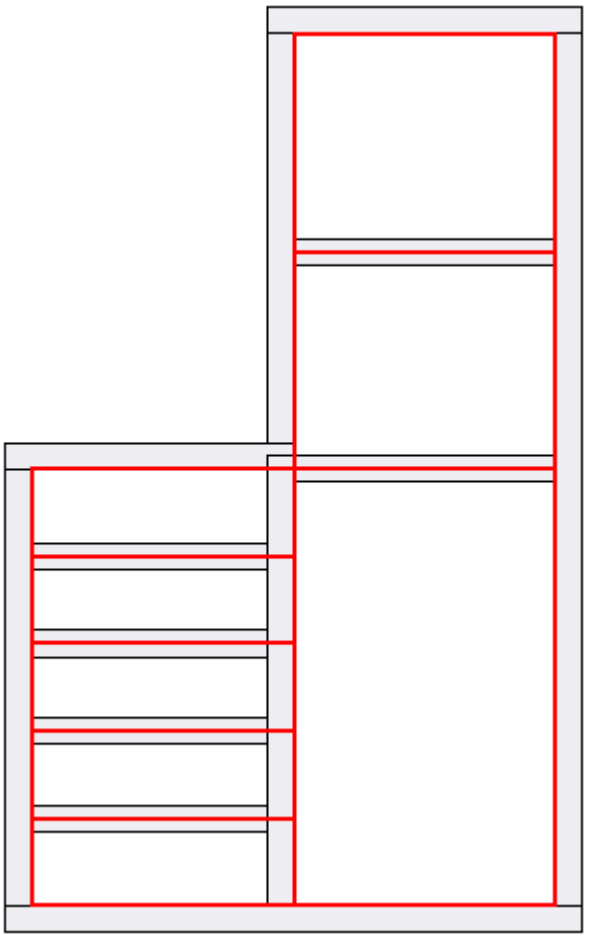

Notice that the outside frames (Frame_1) are positioned outside the sketch. Reposition the frames in the Frame_1 set to be centered on the sketch. A global change will not work for this case. Each frame needs to be repositioned individually.

- Right-click on Frame_1 and choose Edit Definition. It will be easier to reposition the frames by working from the top view.

- On the command bar, click the Modify Cross Sections step.

- Notice that all cross sections for Frame_1 set highlight. Reposition one cross section at a time. Click the Deselect button.

- There are six cross sections in Frame_1 set. You will be instructed on positioning two frames and then you will reposition the remaining frames on your own. Select the cross section shown and then click the Accept button.

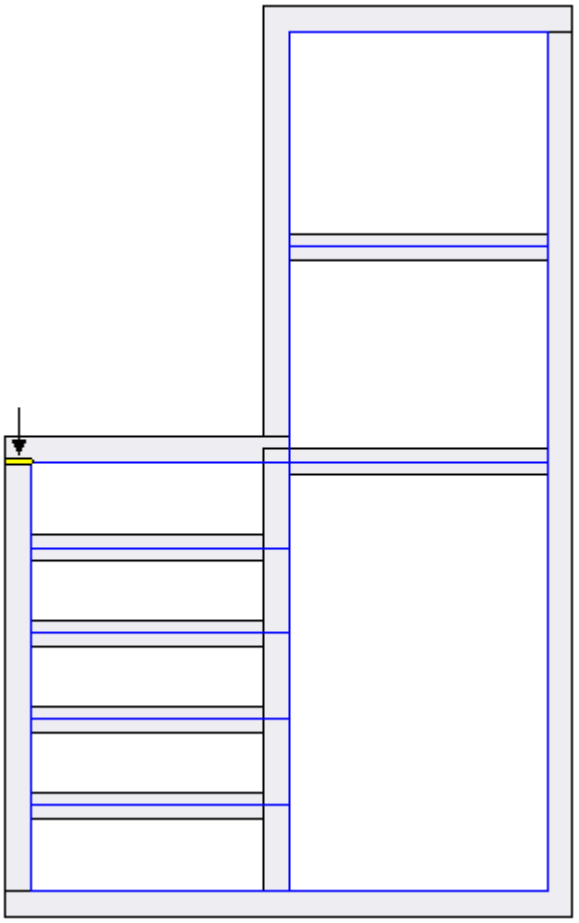

- Press the right arrow key once. This positions the frame centered on the sketch element. Do not click Finish.

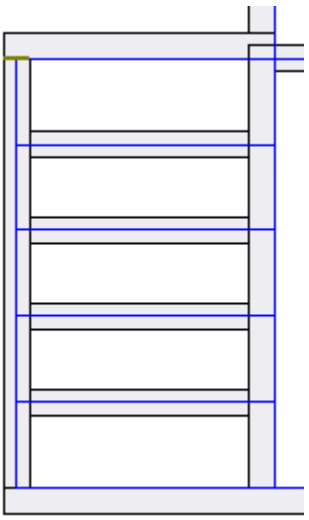

- Click the Modify Cross Sections button again.
- Click the Deselect button. Select the cross section shown and then click the Accept button.

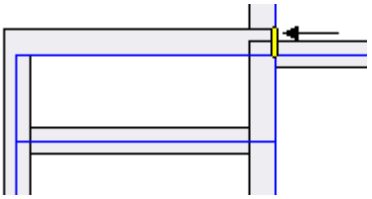

- Press the down arrow key once. This positions the frame centered on the sketch element. Click Finish.

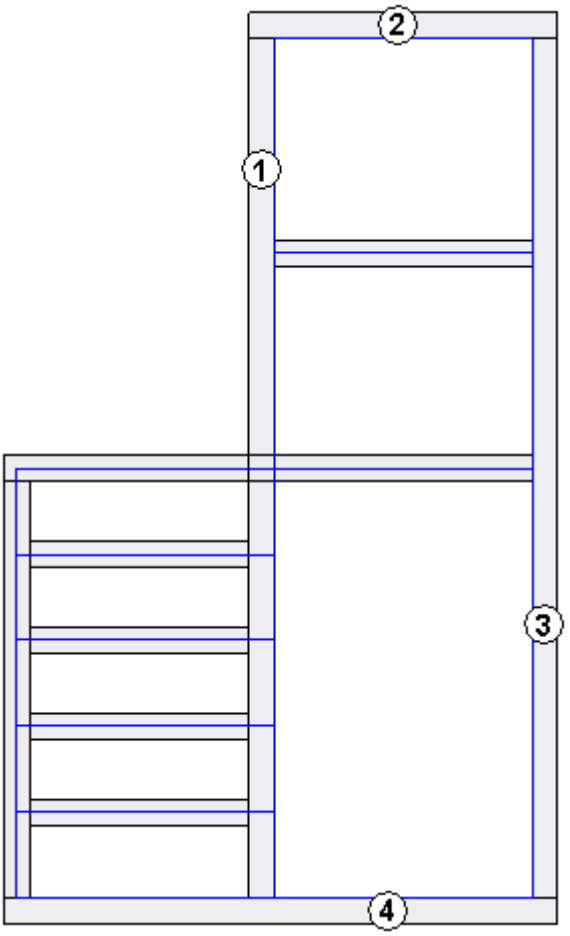

- Reposition the remaining frames (1–4). When finished the result should look like the following image.

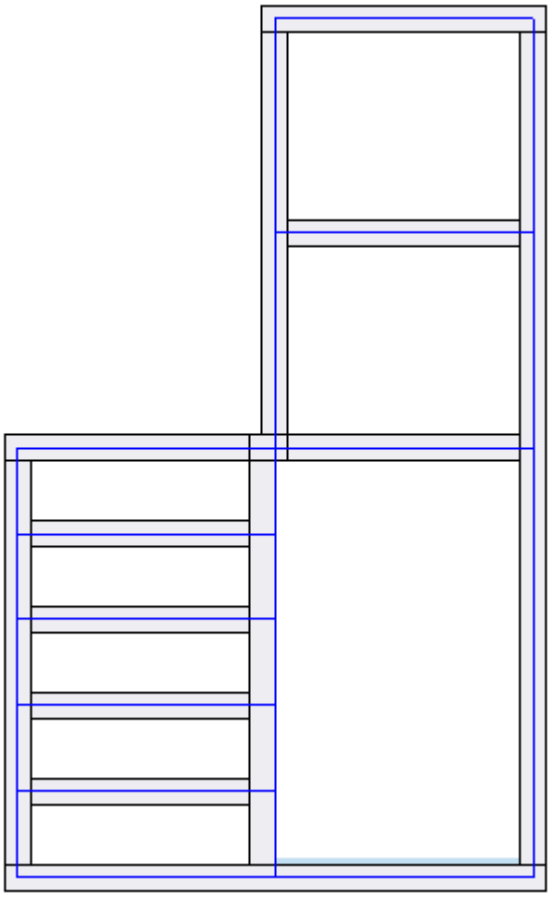

Step 3

- Close *edit_04.par*.

I Activity: Editing frame position using snap points

Step 1

- Open *edit05.asm*.

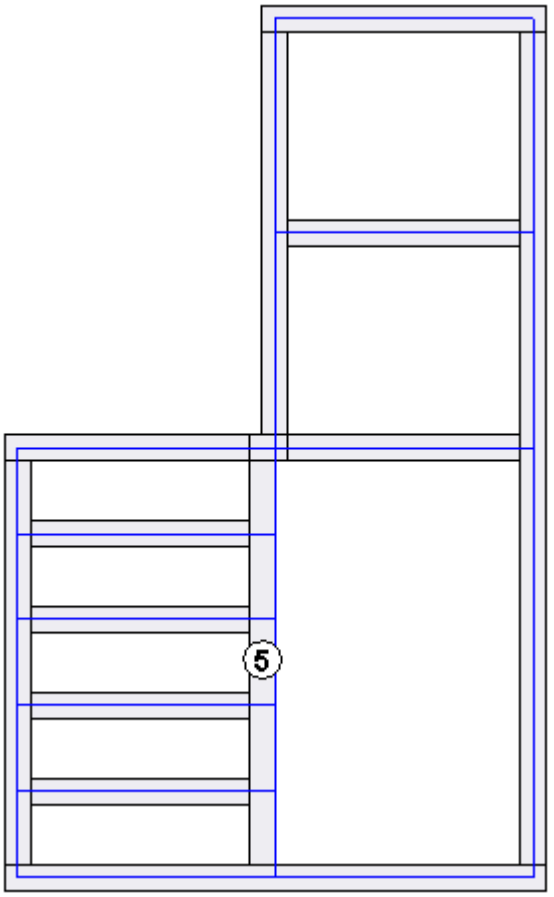

Step 2

Reposition frame (5) using handle points.

- Edit the definition of Frame_2.
- Click the Modify Cross Sections step and then click Deselect.
- Select the cross section shown and then click the Accept button.

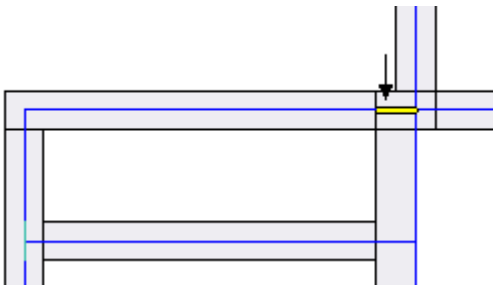

- Go to an Iso view and zoom in to the cross section as shown.

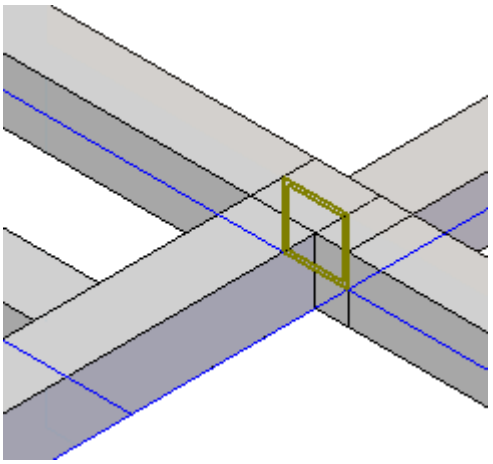

- On the command bar, click the Define Handle Point button  .

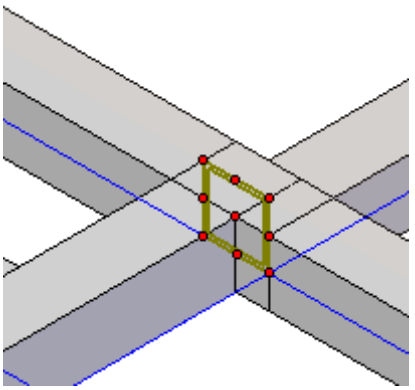

Note

To help understand the positioning, the image shows the default snap point for component *square30.par*.

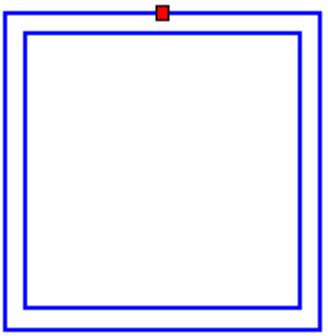

- Click the snap point shown and notice the result.

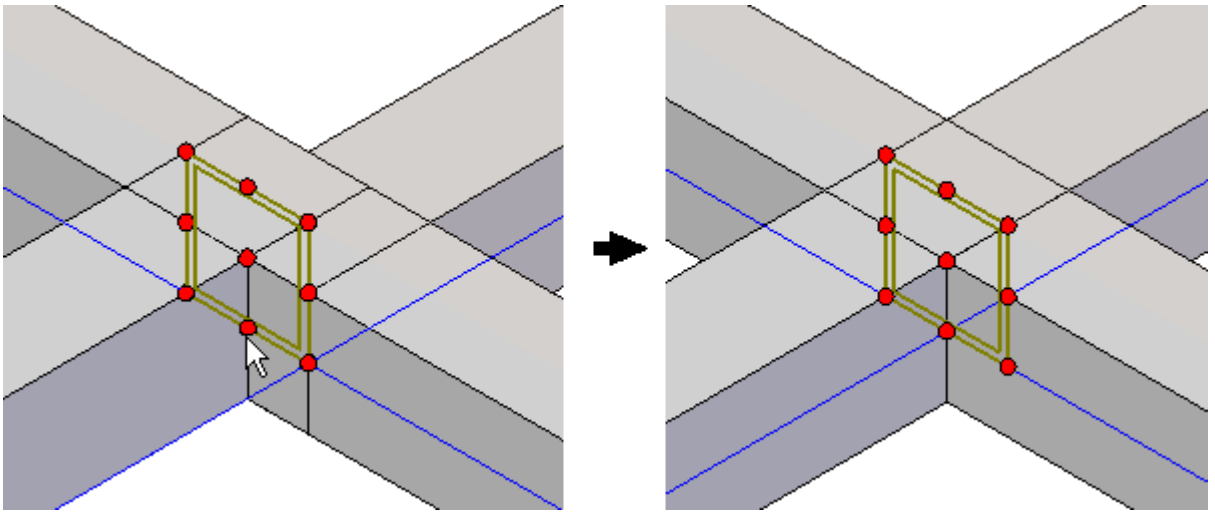

Frame (5) is now centered and above the sketch element.

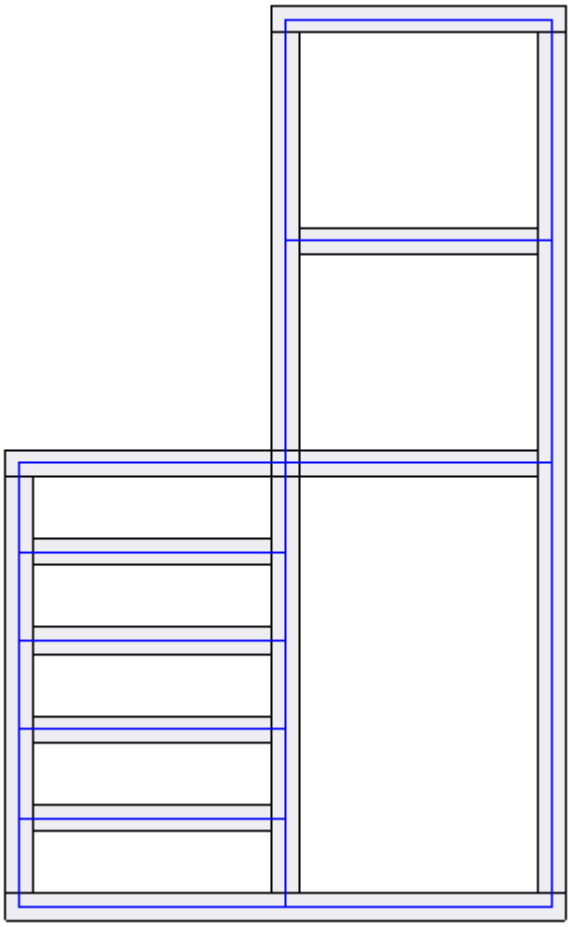

Step 3

- Click Finish and close *edit05.asm*.

J Activity: Editing frame components

Step 1

- Open *edit06.asm*.

Step 2

Change to a different frame component.

- Edit the definition of Frame_2.
- Click the Modify Cross Sections step and then click Deselect.
- Select the cross sections shown and then click Accept.

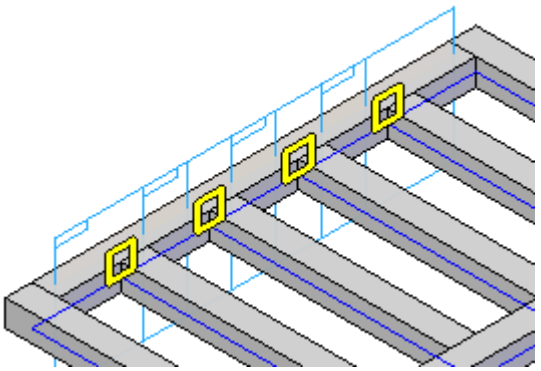

- Click the Select New Cross Section Component button  .
- Click *C-channel35.par* and then click Open.

Step 3

- Click Finish and close *edit06.asm*.

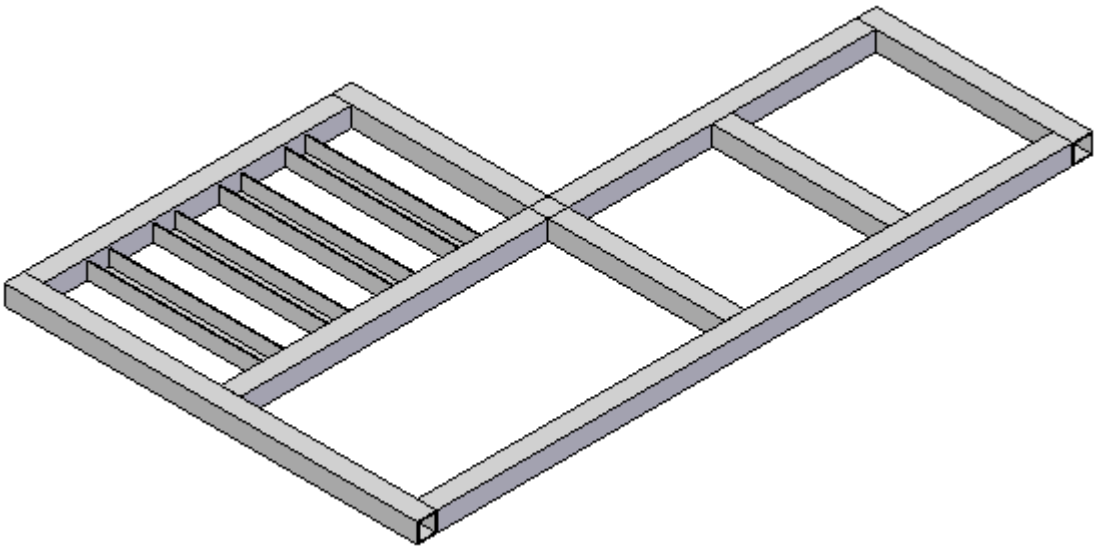

K Activity: Editing frame cross section orientation

Step 1

- Open *edit07.asm*. The last edit will be a change to the cross section orientation.

Step 2

Edit Cross Section orientation using hot keys.

- Edit the definition of Frame_2.
- Click the Modify Cross Sections step and then click Deselect.
- Select the cross section shown and then click the Accept button.

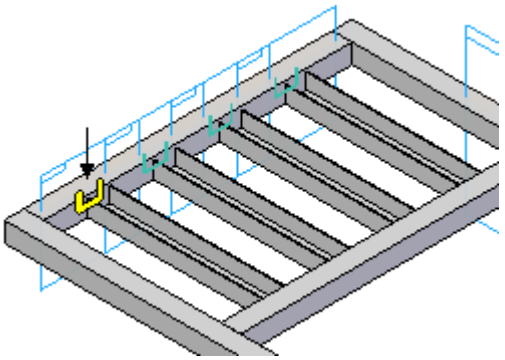

- Press “n” twice on the keyboard. Each “n” rotates the cross section 90°.

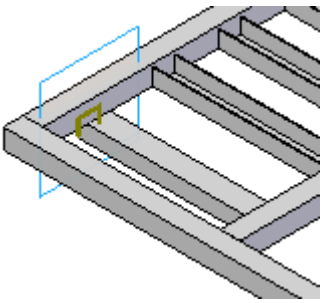

- Press the up arrow twice to position the *C-channel35.par* as shown.

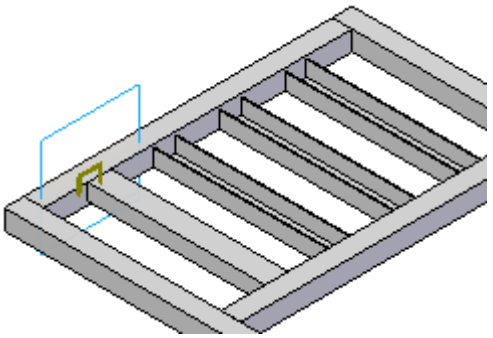

Step 3

Edit Cross Section orientation using angular values.

- Click the Modify Cross Sections step and then click Deselect.
- Select the cross sections shown and then click the Accept button.

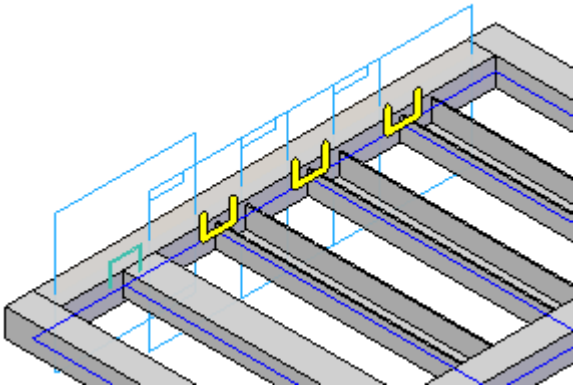

- On the command bar, type 180 in the orientation field.

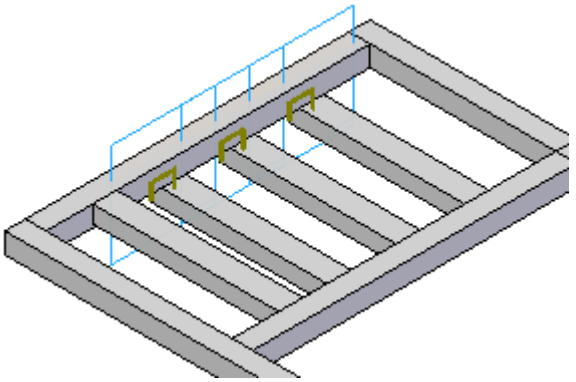

- Press the up arrow twice to position the *C-channel35.par* as shown and then click Finish.

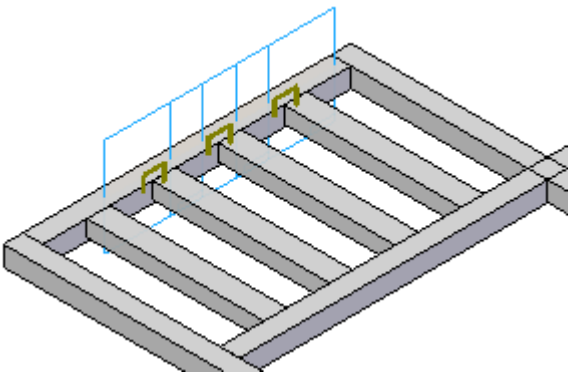

Step 4

- Close *edit07.asm*.

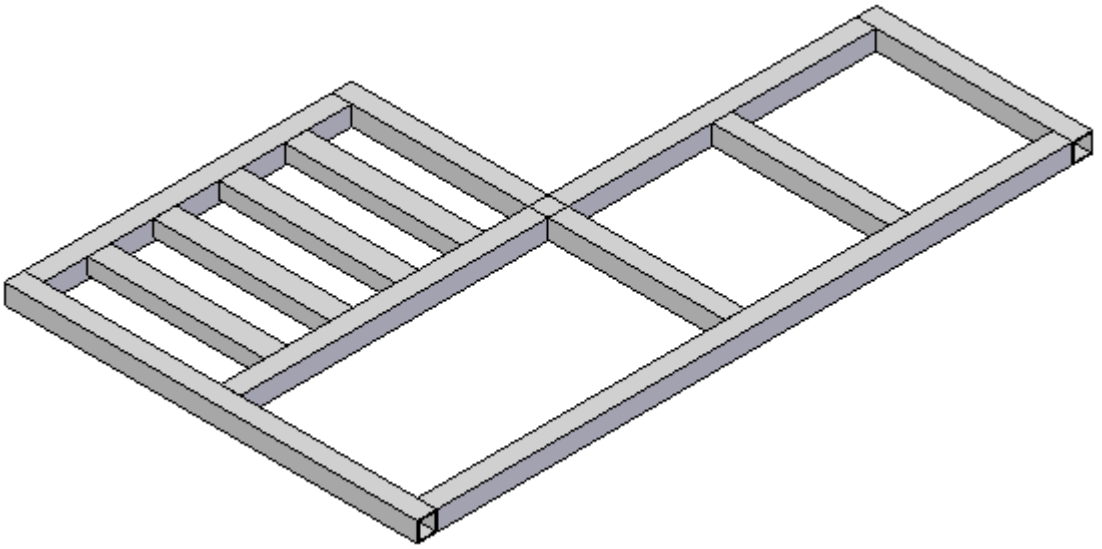

L Activity: Coping joints and colinear paths

Step 1

- Open *coping.asm*.

Step 2

Place frames on the outside paths and also on path (1) which will span across the center.

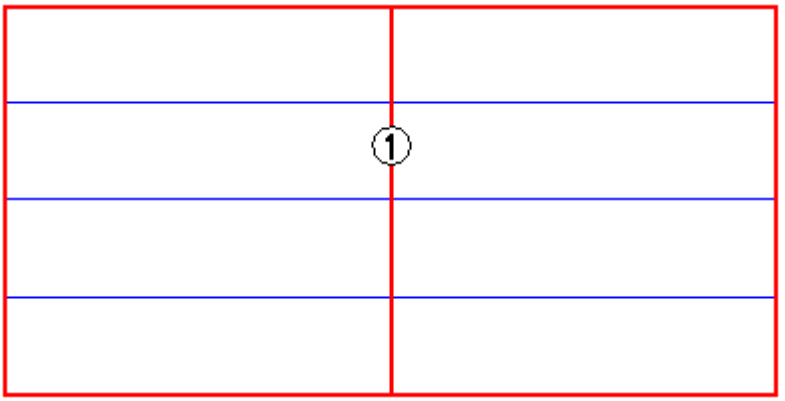

- Choose the Frame command .
- Select the Butt1 corner treatment option.
- Choose the Frame – Select Cross Section Component button .
- In the Frames/DIN/I-Beam folder, select *I-Beam 80x46.par* and click Open.
- Select the four outside lines and line (1). Right-click.

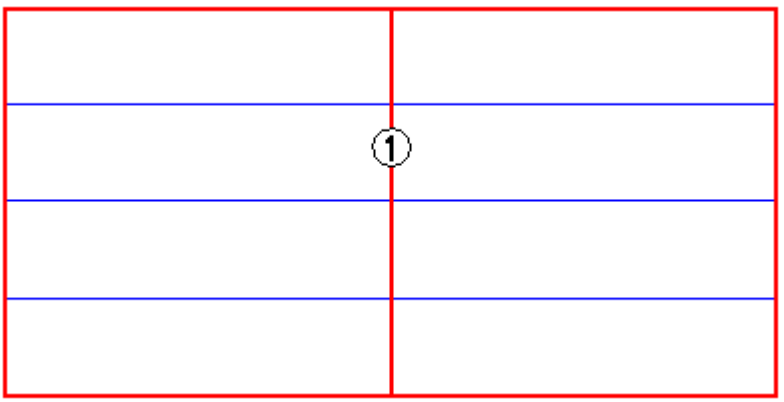

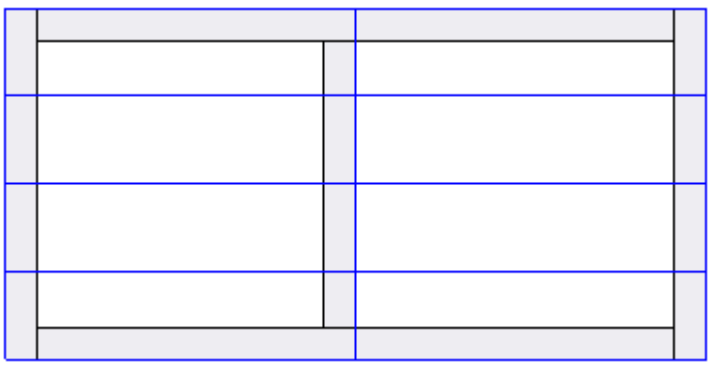

Step 3

- Center frame (3) on the path.

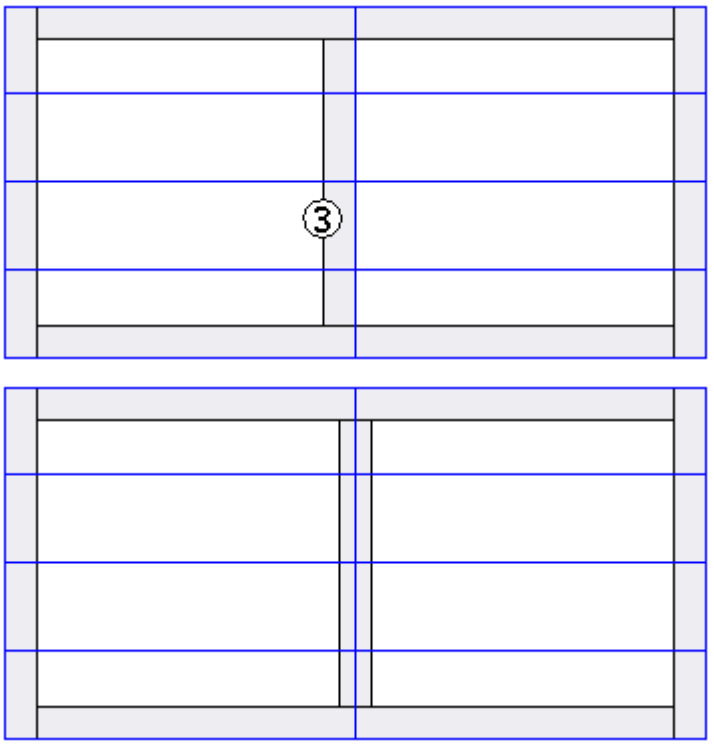

- On command bar, click Finish.

Step 4

Place frames butting up against the center span frame. Place these frames in two steps. Place frames on the three left paths and then place frames on the three right paths. If the two colinear paths are selected, the result will be one frame which crosses the center span frame. Set the coping option for these frames.

- Place frames by selecting the three left paths. Use the same cross section component as used for the outside frames. In the Frame Options dialog, set the coping on non-mitered joints option.

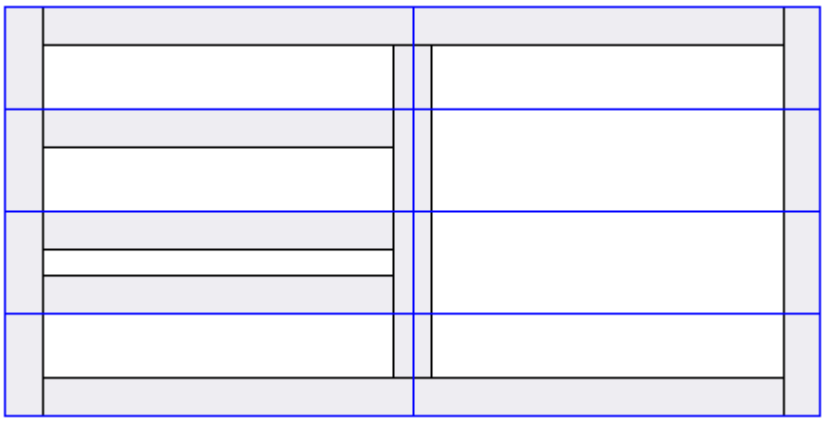

- Place frames on the three right paths using the same options as the left frames.

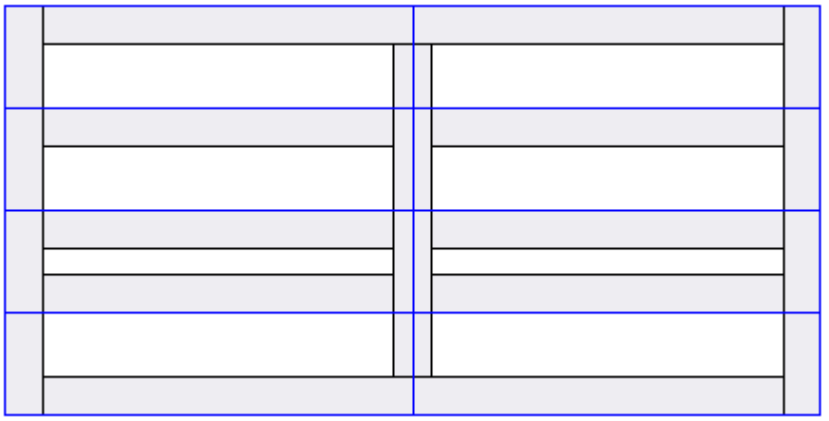

Step 5

- Center the six frames, that butt up to the center span frame, on their paths.

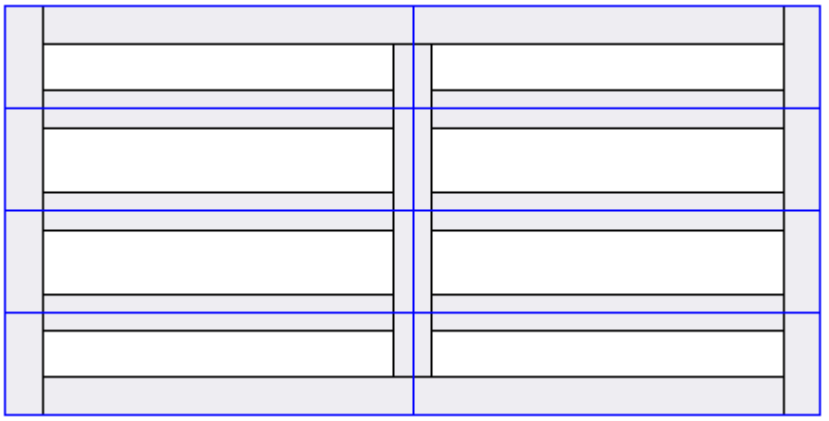

Step 6

Observe the coping results.

- In PathFinder, turn off the display of the outside and center span frames.

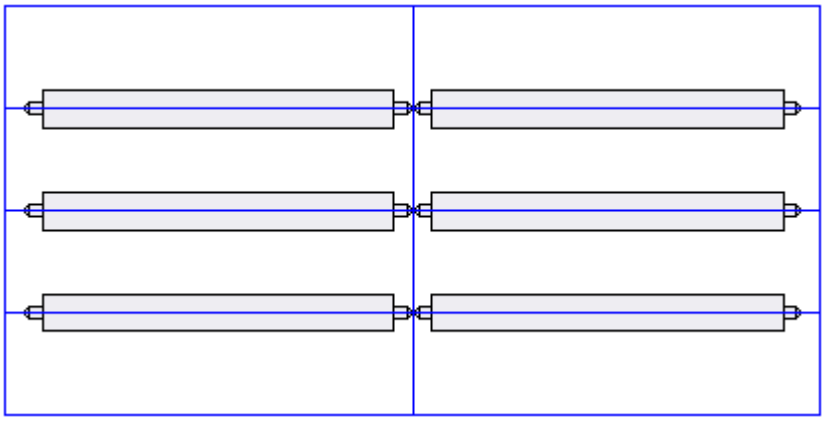

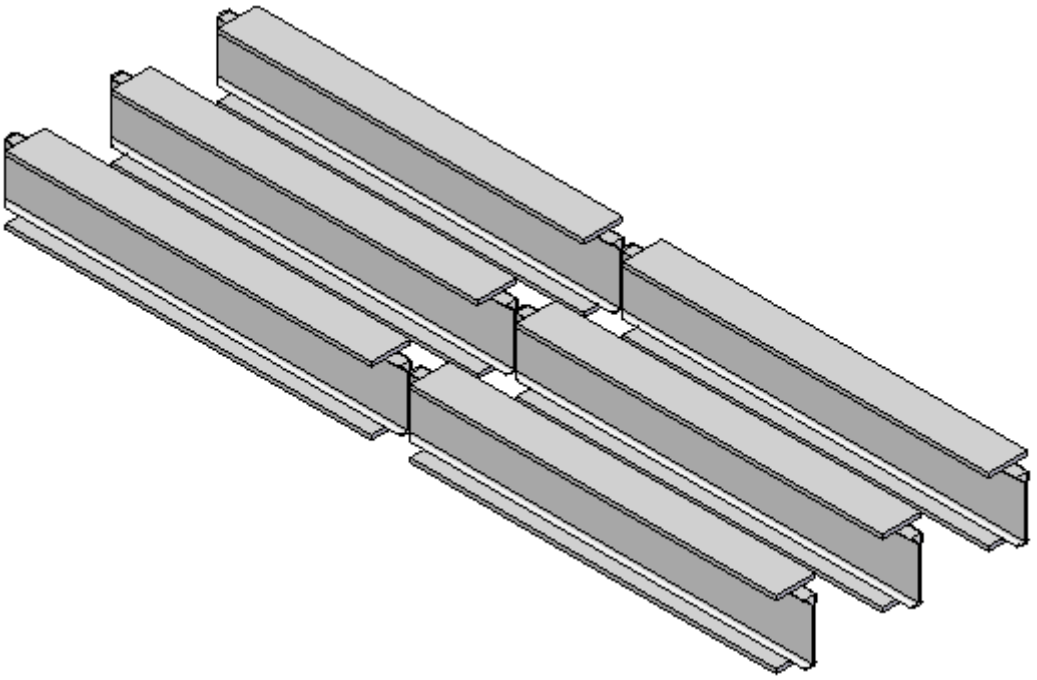

Step 7

- This completes the activity. Close the file.

M Activity: Creating a custom frame

Create a custom frame

- Create a custom frame using the dimensions shown.

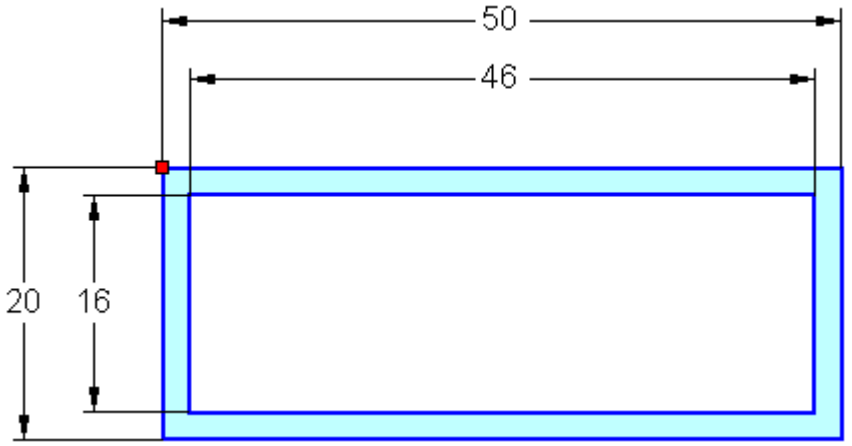

- Choose your own handle point and orientation line.
- Save the custom frame as *rectangle50x20x2.par*.
- Save the file in the Frames course working folder.

N Activity: Creating a frames parts list

Step 1

- Open *draft01.asm*.

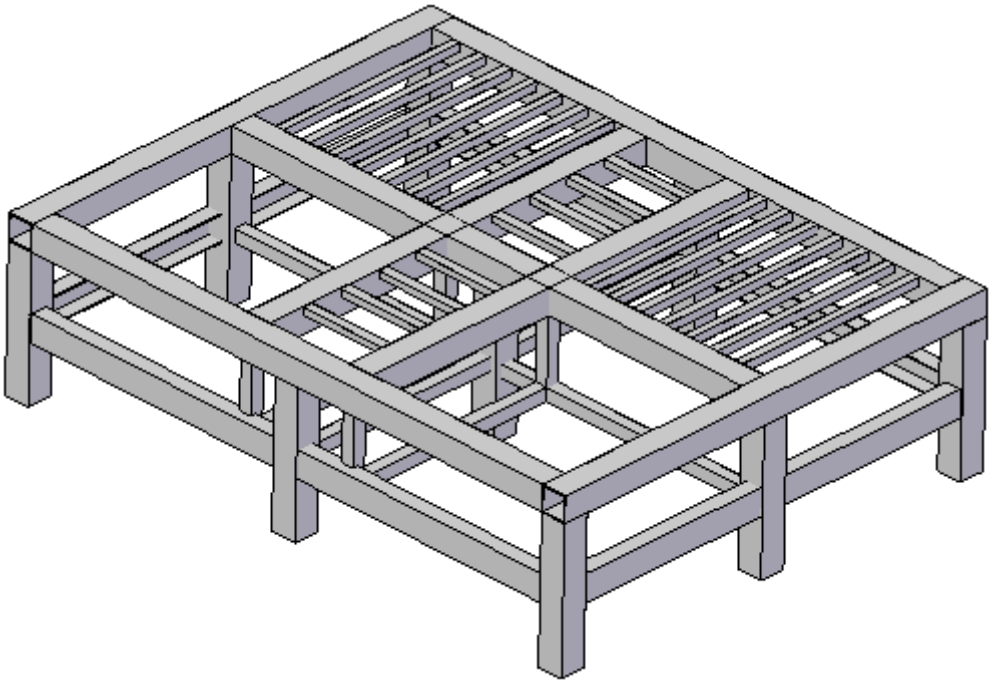

Step 2

Create a drawing of the frame assembly.

- Choose Applications button® New® Create Drawing.
- Click OK on the Create Drawing dialog.
- On the Drawing View Creation Wizard, click the Create Draft Quality drawing views button and then select Finer display from the select list. Click Next.
- In the Named Views: field, click iso and then click Finish.

- Place the view at the location shown.

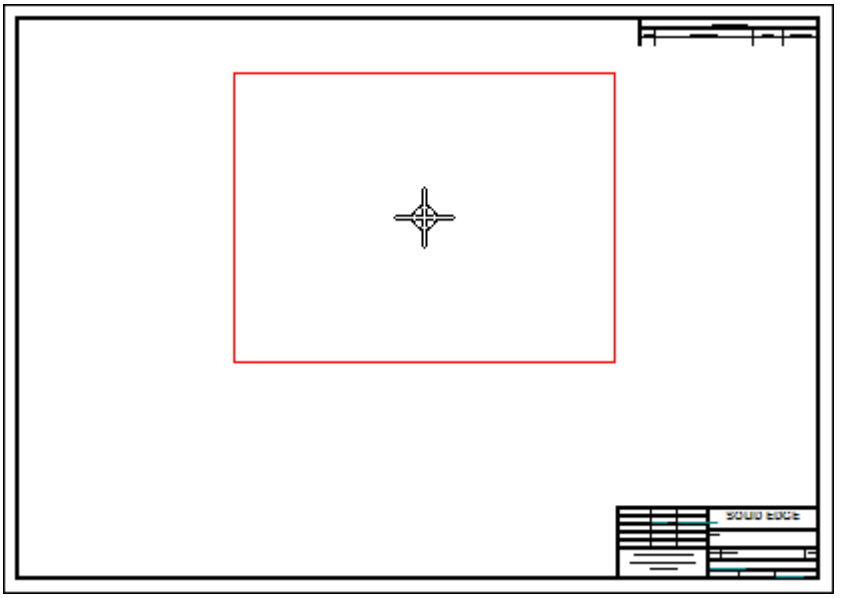

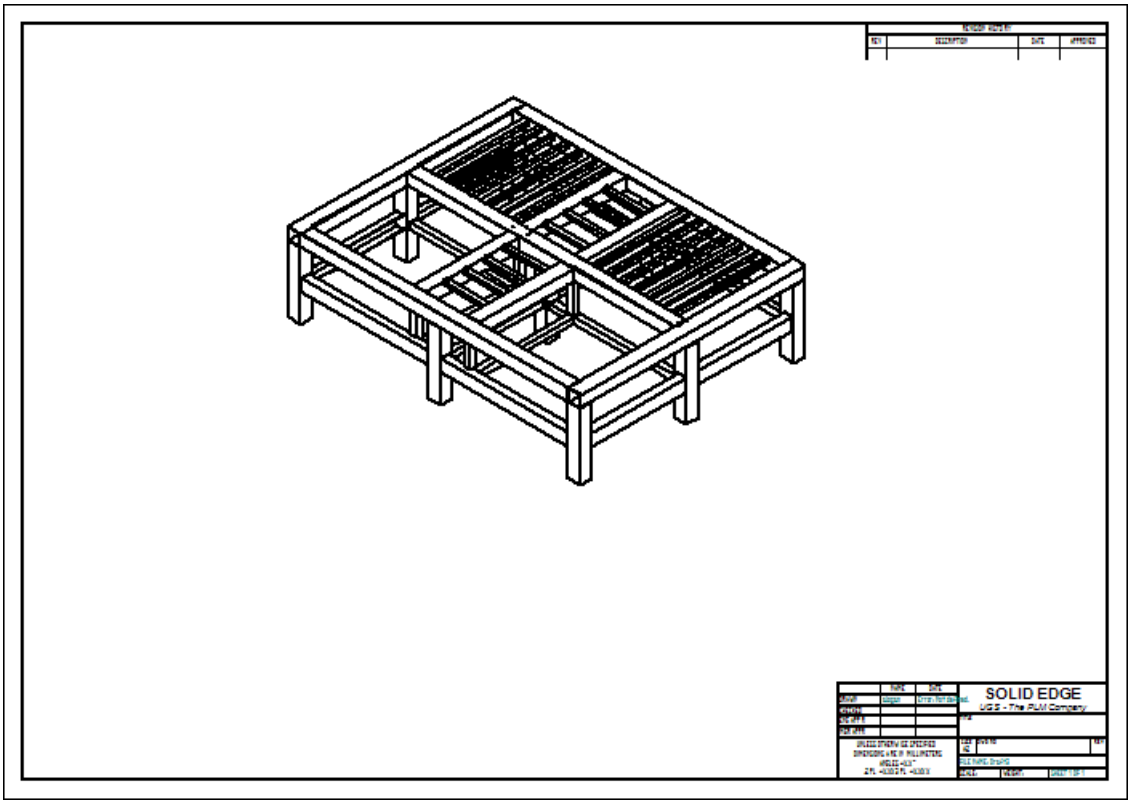

Step 3

Create a parts list.

- On the Home tab, in the Tables group, choose the Parts List command  .
- Click the drawing view.

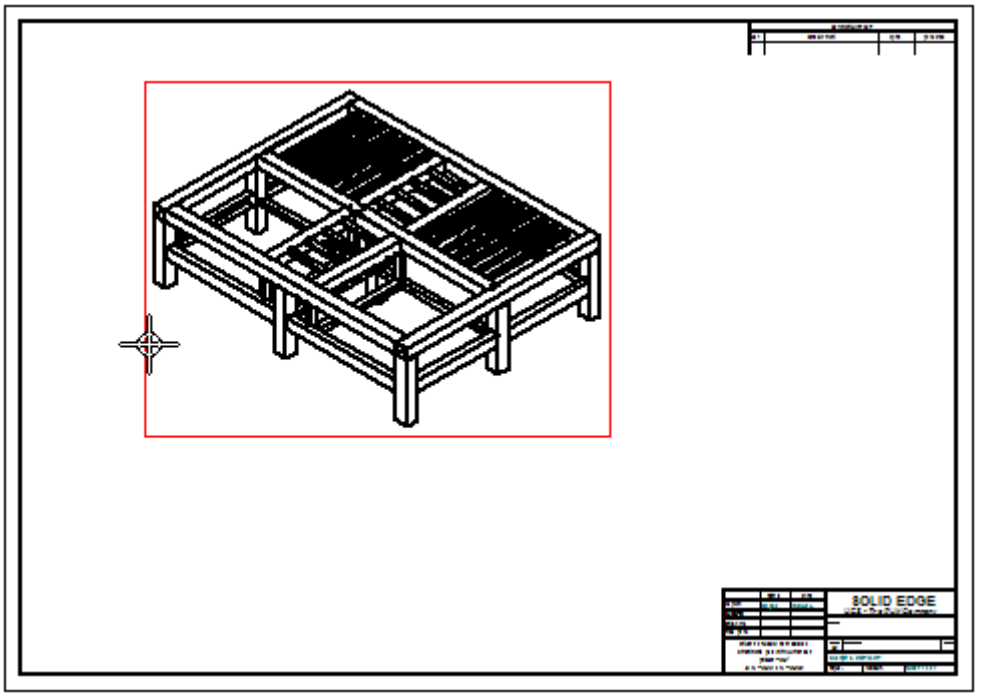

- On the command bar, make sure the Parts List – Auto-Balloon button  is selected.

- Drag the parts list to the location shown.

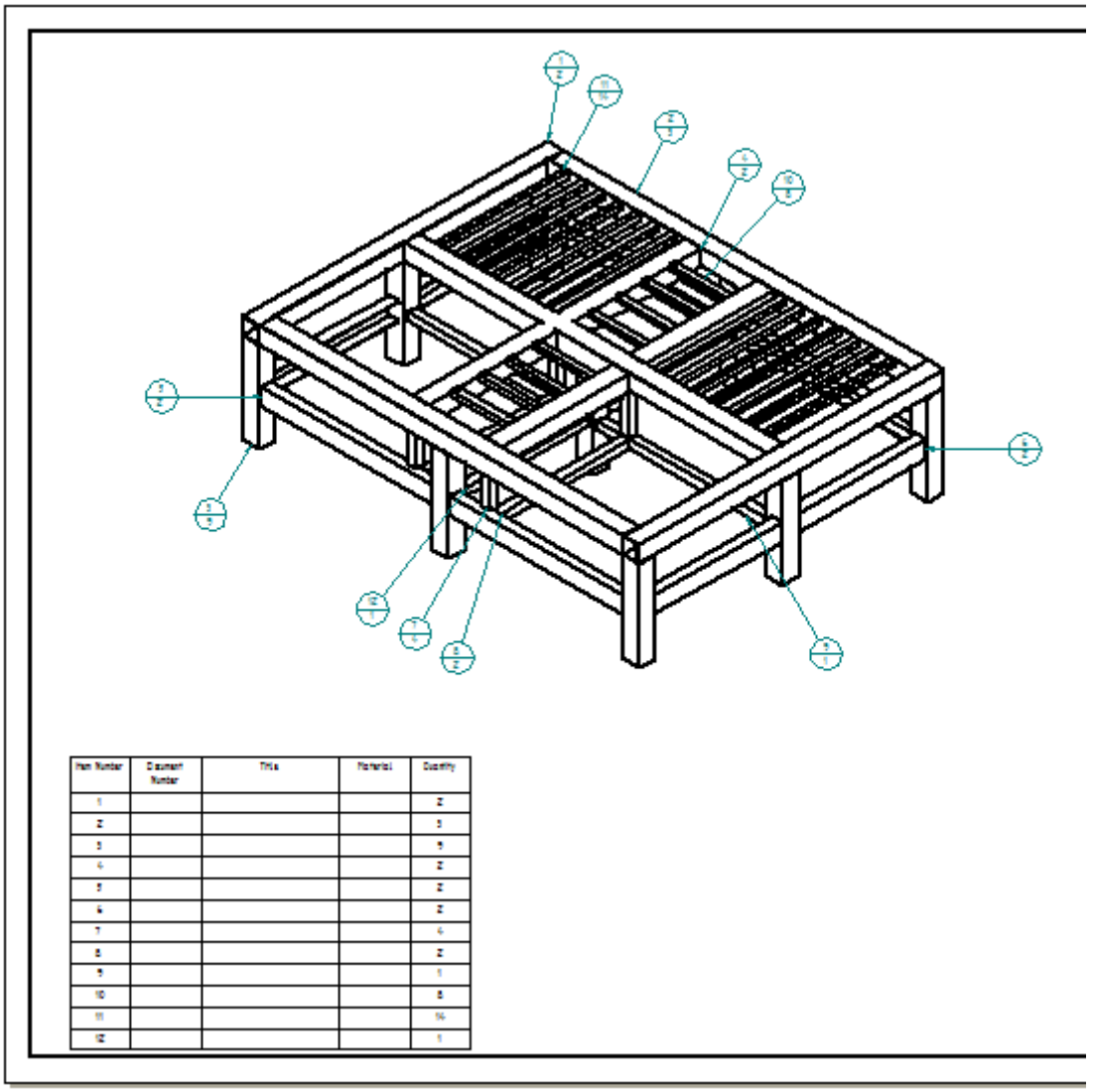

Item Number	Document Number	Title	Material	Quantity
1				2
2				3
3				9
4				2
5				2
6				2
7				4
8				2
9				1
10				8
11				96
12				1

Step 4

Edit the parts list to add a Cut Length column and remove the Document number and Material columns.

Item Number	Document Number	Title	Material	Quantity
1		square 90x4		2
2		square 90x4		3
3		square 90x4		9
4		square 90x4		2
5		c-channel 95x55x4		2
6		c-channel 95x55x4		2
7		square 45x4		4
8		square 45x4		2
9		square 45x4		1
10		c-channel 35x25x2		8
11		square 30x2		14
12		square 45x4		1

- In the drawing sheet, click the parts list and then click the Parts List Properties button  .
- Click the Columns tab. In the Columns: field, click Document Number and then click Delete Column. Delete Material also. In the Properties: field, click Cut Length and then click Add column.
- Click OK. Zoom in on the parts list and view the results.

Note

The format of the parts list can be edited.

Step 5

Edit the parts list to list the rough cut frame lengths.

- In the Parts List Properties dialog, click the Options tab. Type 10 in the Frame rough cut end clearance box.
- Click the box to Create a total length parts list.
- Click the Columns tab. In the Columns: field, click Cut Length. Change the title in the Text: field to Rough Cut Length and then click OK.
- Zoom in on the parts list to observe the changes made.

Step 6

Edit the parts list to show the total length of each component type.

- Click the Columns tab. In the Columns: field, remove Cut Length and Quantity. Add Total Length and then click OK.

  Observe the parts list.

Step 7

- This completes the activity. Exit and save the draft file as *draft01.dft*.